Leitz Lexicon

Edition 7

Dear customer,

For decades, Leitz tool solutions and services has guaranteed our customers sustainable success and competitiveness in the processing of wood, wood derived materials and innovative materials. As a world market leader, we set trends and develop highly efficient tools through innovative ideas and the most advanced technology. Leitz supplies solutions with vision, making production processes not only faster, more flexible and cost-effective, but which combine ecology and economy with excellent processing quality. This current seventh edition of the Leitz Lexicon also reflects our performance promise; that your business succeeds with the support of our products and services.

Sustainability, flexibility, quality, productivity and efficiency as well as suitability and reliability are subjects that are always in focus for Leitz as a company, and our tools, tooling systems and services. The Leitz Lexicon has underlined this for decades. With a new layout and user-oriented structure, we present you the whole world of our total tool know-how.

The increase in networked production processes is vital in the era of Industry 4.0. Along the entire value chain, intelligent tools assume an important and forward-looking role as an information medium. Each element of the process chain plays an important role, however, as we realized decades ago, as a shaping and quality-relevant element on the workpiece, the tool has exceptional functions.

Over more than 140 years of tradition and as a family enterprise in its fifth generation, the satisfaction of our customers - from small craft enterprises to global industrial companies - continues to be our main priority. As a manufacturing service provider and expert partner, with our worldwide net of wholly-owned sales and service companies, we have a centre near you providing expert support, along with highly qualified staff that undergo continual training.

With this new, compact edition of the Leitz-Lexicon, we provide you our comprehensive process and tool know-how so we can do our part for your economic success. We are glad to offer solutions in new dimensions.

Together, we will shape a successful future.

Yours sincerely



Dr. Cornelia Brucklacher
Head of the Advisory Board
and shareholder



Jürgen Köppel
Spokesman of the Management

Leitz was founded in Oberkochen, Southern Germany in 1876. Precision tools and tooling systems developed and produced in house, meet the needs of the woodworking and plastic machining industries, Tooling plus complex tool services make Leitz a reliable partner for both industry and craft. Today Leitz is a global player with production plants, sales companies and service centres in 36 countries.

Leitz Group

Leitz GmbH & Co. KG, with its headquarters in Oberkochen, Baden-Württemberg, Germany is a technological leading manufacturer of precision machine tools and tooling systems for industrial processing of solid wood, wood derived materials and plastic materials. In addition to a comprehensive product program, Leitz offers consultancy services using the company's 140 plus years experience of supplying tools to its customers.

Leitz: facts and figures

The Leitz Group has 6 production facilities in Europe, America and Asia. The employees at Leitz design, make and deliver over 8000 precision tools from the standard tool program, in addition to tooling systems and numerous customer specific tools.

With many subsidiaries and over 120 service centres around the world Leitz is always close to the customer. Supported by local stocking Leitz delivers products quickly and reliably in over 150 countries and offers qualified consultancy support, and fast tool maintenance.









Leitz: a producing service provider

Leitz has, at the head office in Oberkochen and at the subsidiaries in Unterschneidheim, Germany and Riedau, Austria, in-house research and development centres. There Leitz engineers work closely with customers and leading machine manufacturers to develop and test innovative and efficient machining and tooling solutions.

Leitz also co-operates closely with the renowned research institutes and universities to offer the best tooling solution to its customers. Optimised performance, reduced processing costs and consideration of the environmental impact of the machining solutions are three of the priorities for research and development at Leitz.

Leitz supplies much more than a special range of products: Leitz is a service provider; the product spectrum encompasses the entire range of precision machine tools for global industrial organisations and craftsman's shops in the wood and plastic processing industries and are, for example, used in window, timber construction, panel processing and furniture. Leitz offers the right solution for every process.

Leitz sees itself as an industrial partner and trouble shooter and offering first class consultancy services, project and process engineering, from traditional tool service to complex tool management and tool procurement, tool management, tool controlling, implementation and training. Leitz services are individually tailored and give each customer the opportunity to concentrate on his strengths and core business.

Service within hearing distance

Even the best quality tool can only give of its best if regularly maintained by experts over its entire life. Leitz offers a global tool maintenance service servicing all tools to uniform and certified quality standards – service within hearing distance. The Leitz collection and delivery service complements this professional service and ensures customers' tools are returned to them quickly.

From the edge to tool – an all in one solution

Leitz Group, Boehlerit GmbH & Co. KG of Kapfenberg, Austria and Bilz GmbH & Co. KG of Ostfildern, Germany work closely together developing and producing innovative tungsten carbide and diamond cutting materials; Here is foundation for the quality and inherent value of Leitz tools. Bilz's expertise is in tool clamping technology and is a leading manufacturer of thermal clamping systems for high speed machining of metal, wood and plastics. Bilz's products influence the economic success of Leitz tools. The knowledge and the development capability of Leitz, Boehlerit and Bilz opens up promise exciting prospects for the three companies and their customers.

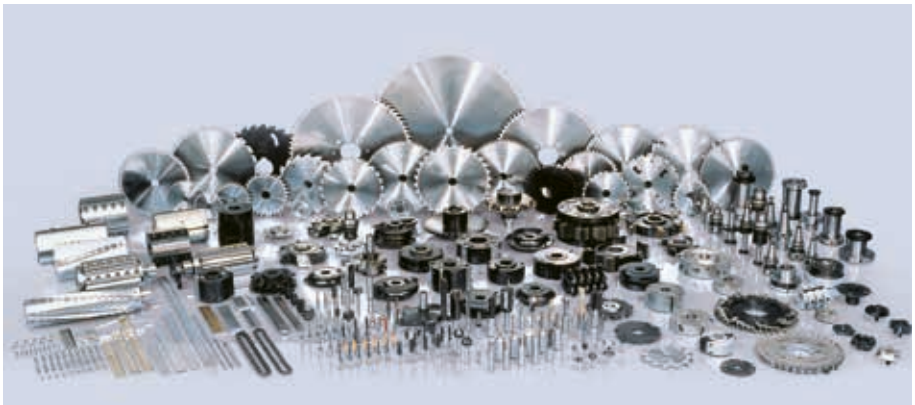



Worldwide, near to the customer



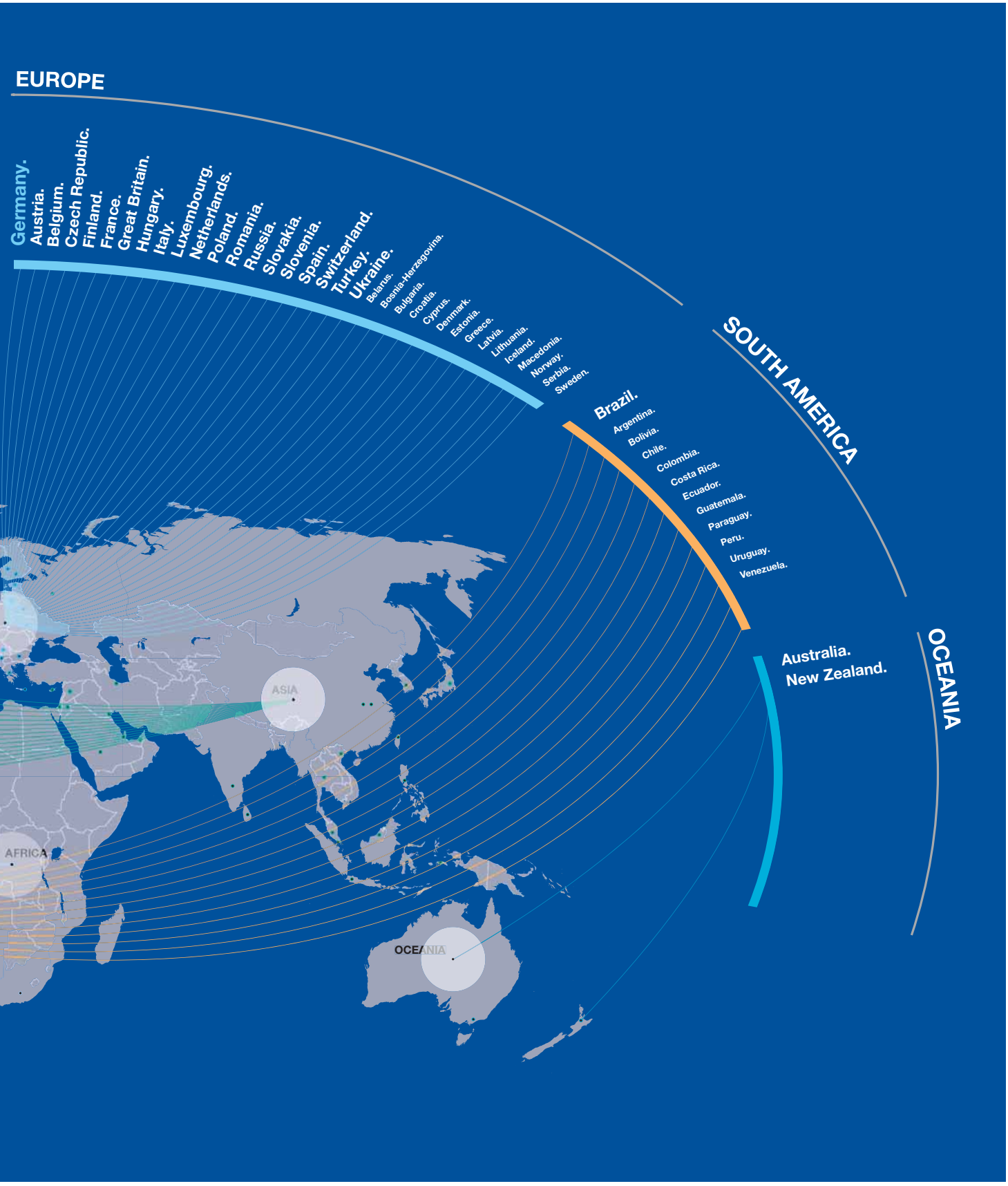
EUROPE
Germany.
Austria.
Belgium.
Czech Republic.
Finland.
France.
Great Britain.
Hungary.
Italy.
Luxembourg.
Netherlands.
Poland.
Romania.
Russia.
Slovakia.
Slovenia.
Spain.
Switzerland.
Turkey.
Ukraine.
Belarus.
Bosnia-Herzegovina.
Bulgaria.
Croatia.
Cyprus.
Denmark.
Estonia.
Greece.
Latvia.
Lithuania.
Iceland.
Macedonia.
Norway.
Serbia.
Sweden.
SOUTH AMERICA
Brazil.
Argentina.
Bolivia.
Chile.
Colombia.
Costa Rica.
Ecuador.
Guatemala.
Paraguay.
Peru.
Uruguay.
Venezuela.
OCEANIA
Australia.
New Zealand.
ASIA
AFRICA
OCEANIA

Important Order and Delivery Notes

Standard tools
The identification number clearly defines the tool. All the data the identification number, dimensions, direction of rotation and cutting material add to the information and help avoid wrong deliveries in case of an inaccurate identification number. Shank tools and tools with bore are detailed below as examples.

Shank tool

Identification:	Router cutter Diamaster Quattro
Item number:	WO 140 2
Ident. no.:	091147
Dimensions:	D x GL/NL x (d x l) 25 x 100/38 x (20 x 50)
Dir. of rotation:	LH (clockwise)
Cutting material:	DP (poly-crystalline diamond)

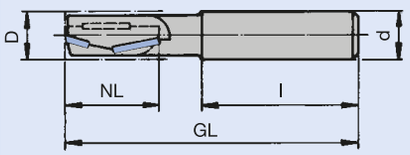

Tool with bore

Identification:	Rebating cutterhead
Item number:	WW 420 1 01
Ident. no.:	024498
Dimensions:	D x SB x BO; Z/V 125 x 50.4 x 30; Z2/V4
Cutting material:	HW (tungsten carbide)

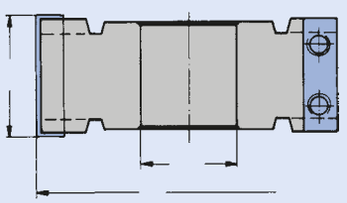

Special tools
Smooth enquiry and order processing requires detailed information. – The enquiry and order forms aid the order process and prevent errors. The following information will help you complete the order form.

Characteristic tool data
- Diameter x cutting width x bore (tools with bore)
- Diameter x working length x shank dimension (shank tools)
- Number of teeth
- Profile depth
- Direction of rotation (from the drive side)
- Speed of rotation
- Feed speed
- Keyway dimensions
- Tool design
- Quality of cutting material (HS, Stellite™, tungsten carbide, diamond)
- Type of feed: Manual feed (MAN) or Mechanical feed (MEC)

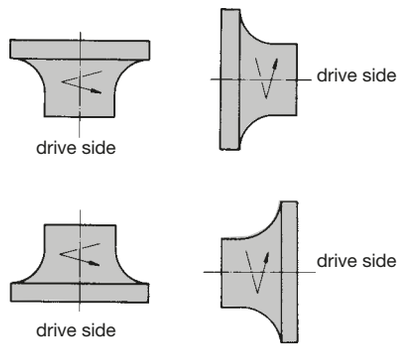

Direction of rotation right.

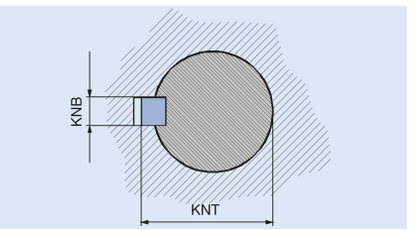

Keyway reference dimensions measured on the spindle

For bevelling, rebating and profiling tools we always supply:
Right hand rotation tools with the large diameter or spur to the top (unless specified differently at the time of order).

Tool set data
- Material: e. g.: softwoods, hardwoods, tempered or compressed woods, plywood boards, wood core boards, wood chipboards, MDF boards, soft fibreboards, hard fibreboards, compressed glulam, laminated woods, plastics, etc.
- Surface finish of the material: veneered, plastic coated, lacquered, etc. (in case of doubt regarding the material or its characteristics: send a sample of the material to be processed).
- Direction of processing: processing along or across the grain. Processing with or against feed.
- Machine data: manufacturer and type, range of rotation, installed power, max. tool dimensions, interfaces, type of feed, etc.
- Position of the workpiece to the tool: support of the workpiece, position of the fence and feed direction.

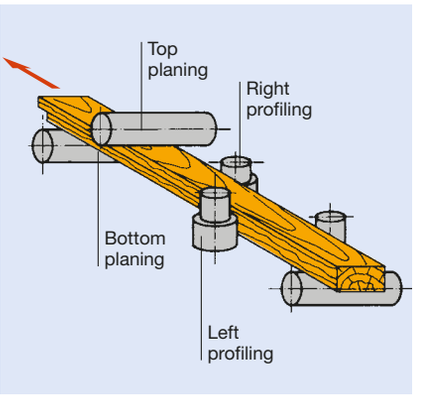

Position of the workpiece relative to the tool

Profile information
Profile sketches or profile drawings must clearly indicate if they refer to the material (wood) or cutter. Please specify motor side, direction of rotation, dimensions and working conditions on the material sample or drawing.

Notes to the Lexicon concerning the diagrams and tables
The statements made in the diagrams and tables relate to specific conditions, and represent parameters from tests subjected to defined conditions. Variations when using tools in individual case due to special application conditions may be possible. Our support team will provide you with detailed information.

General Terms and Conditions
The sale of our tools is exclusively subject to our General Terms and Conditions in their respective valid version. Any sale conditions to the contrary will not be accepted by Leitz. The current version of our General Terms and Conditions you can find on www.leitz.org/AGB.

www.leitz.org

SDZ/MA 10/2017 Subject to changes prior to technical developments. © Leitz GmbH & Co. KG

Sawing

Leitz Lexicon Edition 7 | Version 3 | 05/2025



Explanation of abbreviations

A	=	dimension A
a_e	=	cutting thickness (radial)
a_p	=	cutting depth (axial)
ABM	=	dimension
APL	=	panel raising length
APT	=	panel raising depth
AL	=	working length
AM	=	number of knives
AS	=	anti sound (low noise design)
b	=	overhang
B	=	width
BDD	=	thickness of shoulder
BEM	=	note
BEZ	=	description
BH	=	tipping height
BO	=	bore diameter
CNC	=	Computerized Numerical Control
d	=	diameter
D	=	cutting circle diameter
D0	=	zero diameter
DA	=	outside Diameter
DB	=	diameter of shoulder
DFC	=	Dust Flow Control (optimised chip clearance)
DGL	=	number of links
DIK	=	thickness
DKN	=	double keyway
DP	=	polycrystalline diamond
DRI	=	rotation
FAB	=	width of rebate
FAT	=	depth of rebate
FAW	=	bevel angle
FLD	=	flange diameter
f_z	=	tooth feed
$f_{z\ eff}$	=	effective tooth feed
GEW	=	thread
GL	=	total length
GS	=	Plunging edge
H	=	height
HC	=	tungsten carbide, coated
HD	=	wood thickness (thickness of workpiece)
HL	=	high-alloyed tool steel
HS	=	high-speed steel (HSS)
HW	=	tungsten carbide (TCT)
ID	=	ident number
IV	=	insulation glazing
KBZ	=	abbreviation
KLH	=	clamping height
KM	=	edge breaker
KN	=	single keyway
KNL	=	combination pinhole consists of 2/7/42 2/9/46,35 2/10/60
L	=	length
l	=	clamping length
LD	=	left hand twist
LEN	=	Leitz standard profiles
LH	=	left hand rotation
M	=	metric thread
MBM	=	minimum order quantity
MC	=	multi-purpose steel, coated
MD	=	thickness of knife
min^{-1}	=	revolutions per minute (RPM)
MK	=	morse taper
m min^{-1}	=	metres per minute
m s^{-1}	=	metres per second
n	=	RPM
n_{max}.	=	maximum permissible RPM
NAL	=	position of hub
ND	=	thickness of hub
NH	=	zero height
NL	=	cutting length
NLA	=	pinhole dimensions
NT	=	grooving depth
P	=	profile
POS	=	cutter position
PT	=	profile depth
PG	=	profile group
QAL	=	cutting material quality
R	=	radius
RD	=	right hand twist
RH	=	right hand rotation
RP	=	radius of cutter
S	=	shank dimension
SB	=	cutting width
SET	=	set
SLB	=	slotting width
SLL	=	slotting length
SLT	=	slotting depth
SP	=	tool steel
ST	=	Cobalt-basis cast alloys, e.g. Stellite™
STO	=	shank tolerance
SW	=	cutting angle
TD	=	diameter of tool body
TDI	=	thickness of tool
TG	=	pitch
TK	=	reference diameter
UT	=	cutting edges with irregular pitch
V	=	number of spurs
v_c	=	cutting speed
v_f	=	feed speed
VE	=	packing unit
VSB	=	adjustment range
WSS	=	workpiece material
Z	=	number of teeth
ZA	=	number of fingers
ZF	=	tooth shape (cutting edge shape)
ZL	=	finger length

Notes to the Lexicon concerning the diagrams and tables

The statements made in the diagrams and tables relate to specific conditions and represent parameters from tests subjected to defined conditions. Variations when using tools in individual case due to special application conditions may be possible. Our support team will provide you with detailed information.



1. Sawing



1.1 Solid wood cutting along grain 10
1.1.1 Circular sawblades thin kerf 12
1.1.2 Circular sawblades with wiper teeth 14
1.1.3 Circular sawblades without wiper teeth 18



1.2 Solid wood cutting across grain 21
1.2.1 Circular sawblades for optimising saws 22
1.2.2 Circular sawblades WZ with neg. cutting angle 23
1.2.3 Circular sawblades for joinery machines 25



1.3 Sizing 26
1.3.1 Sizing sawblades WZ 27
1.3.2 Sizing sawblades Katana 30
1.3.3 Sizing sawblades WhisperCut 31
1.3.4 Sizing sawblades HZ/DZ 32
1.3.5 Sizing sawblades FZ/TR 34
1.3.6 Sizing sawblades FZ 35
1.3.7 Scoring sawblades for table and panel saws 38



1.4 Panel sizing 40
1.4.1 Panel sizing sawblades WZ 41
1.4.2 Panel sizing sawblades FZ/TR 42
1.4.3 Panel sizing sawblades TR/TR 44
1.4.4 Scoring sawblades for panel saws KON 48
1.4.5 Scoring sawblades - softforming / postforming 51
1.4.6 Overview scoring and main sawblades 52
1.4.7 Circular sawblades for floor production 56



1.5 Cutting non-ferrous metals and plastics 57
1.5.1 Cross and mitre cut sawblades for profiles 58
1.5.2 Circular sawblades for solid panels and blocks 64



1.6 Circular sawblades for CNC 69
1.6.1 Trimming and sizing sawblades 70
1.6.2 Grooving sawblades 73



1.7 Portable saws and table-top machines 74
1.7.1 Circular sawblades WZ 75
1.7.2 Circular sawblades FZ/TR 79
1.7.3 Circular sawblades for metals - DryCut 81
1.7.4 Circular sawblades for plastics and NF-metals 82
1.7.5 Circular sawblades for saw benches 83
1.7.6 Circular sawblades for fibre cement boards 84
1.7.7 Accessories reducing rings 85

Troubleshooting 86

Signs of wear 88

Enquiry/order form special tools – sawing 90

Alphabetical product index 92

ID index 94

D mm	SB mm	BO mm	Z	QAL	ZF	SW °	ID	Page
80	2,8 - 3,6	20	20	HW	FZ	10	**165401**	38
80	3,3	20	18	DP	HZ/WZ	10	**190700**	31
100	2,4	12	30	HW	WZ	10	**166109**	76
100	2,4	22	30	HW	WZ	10	**166110**	76
100	2,8 - 3,6	20	20	HW	FZ	10	**165402**	38
100	2,8 - 3,6	22	20	HW	FZ	10	**165403**	38
100	3,2	20	20	HW	KON/FZ	5	**165625**	49
100	3,2	22	20	HW	KON/FZ	5	**165626**	49
100	3,5	20	35	HW	WZ/WZ/FZ	15	**166014**	73
100	3,5	30	35	HW	WZ/WZ/FZ	15	**166000**	73
100	4,0	20	12	DP	FZ	10	**192303**	73
100	4,0	20	35	HW	WZ/WZ/FZ	15	**166015**	73
100	4,0	30	35	HW	WZ/WZ/FZ	15	**166008**	73
100	5,0	20	35	HW	WZ/WZ/FZ	15	**166016**	73
100	5,0	30	35	HW	WZ/WZ/FZ	15	**166001**	73
100	8,5	20	35	HW	WZ/WZ/FZ	15	**166013**	73
100	8,5	30	35	HW	WZ/WZ/FZ	15	**166017**	73
120	2,4	20	24	HW	WZ	15	**166111**	76
120	2,8 - 3,6	20	24	HW	FZ	10	**165404**	38
120	2,8 - 3,6	20	24	DP	FZ	10	**190731**	39
120	2,8 - 3,6	22	24	HW	FZ	10	**165405**	38
120	2,8 - 3,6	22	24	HW	FZ	10	**165406**	38
120	2,8 - 3,6	22	24	DP	FZ	10	**190694**	39
120	2,8 - 3,6	50	24	HW	FZ	10	**165412**	38
120	2,8 - 3,6	50	24	DP	FZ	10	**190704**	39
120	3,2	20	24	HW	KON/FZ	5	**165627**	49
120	3,3	20	18	DP	HZ/WZ	10	**190701**	31
120	3,3	22	18	DP	HZ/WZ	10	**190702**	31
120	3,5	20	35	HW	WZ/WZ/FZ	15	**166002**	73
120	3,5	35	35	HW	WZ/WZ/FZ	15	**166004**	73
120	4,0	20	35	HW	WZ/WZ/FZ	15	**166009**	73
120	4,0	35	35	HW	WZ/WZ/FZ	15	**166010**	73
120	5,0	20	35	HW	WZ/WZ/FZ	15	**166003**	73
120	5,0	35	35	HW	WZ/WZ/FZ	15	**166005**	73
125	2,4	20	36	HW	WZ	10	**166113**	76
125	2,4	20	24	HW	WZ	15	**166112**	76
125	2,8 - 3,6	20	24	HW	FZ	10	**165407**	38
125	2,8 - 3,6	20	24	DP	FZ	10	**190695**	39
125	3,1	20	20	DP	KON/FZ	10	**190564**	50
125	3,1	22	20	DP	KON/FZ	10	**190614**	50
125	3,2	20	24	HW	KON/WZ	5	**165550**	48
125	3,2	22	24	HW	KON/WZ	5	**165551**	48
125	3,3	20	18	DP	HZ/WZ	10	**190703**	31
125	3,5	30	35	HW	WZ/WZ/FZ	15	**166006**	73
125	4,0	30	35	HW	WZ/WZ/FZ	15	**166011**	73
125	4,4	20	24	HW	KON/FZ	5	**165628**	49
125	4,4	45	24	HW	KON/WZ	5	**165553**	48
125	4,4	45	24	HW	KON/FZ	5	**165629**	49
125	5,0	30	35	HW	WZ/WZ/FZ	15	**166007**	73
140	1,8	20	35	HW	WZ/WZ/ WZ/FZ	10	**166623**	75
140	2,4	20	24	HW	WZ	15	**166114**	76
140	2,8 - 3,8	36	24	HW	WZ	10	**165408**	38
150	2,8	20	48	HW	WZ	10	**166115**	76
150	3,2	30	48	HW	WZ	10	**163100**	27
150	3,2	30	42	HW	FZ	10	**165375**	36
150	4,3	30	24	DP	KON/FZ	10	**190565**	50, 53
150	4,4	20	24	HW	KON/WZ	5	**165554**	48
150	4,4	30	36	HW	KON/WZ	5	**165555**	48, 53
150	4,4	30	24	HW	KON/WZ	5	**165556**	48, 53
150	4,4	45	24	HW	KON/WZ	5	**165557**	48, 52
150	4,4	45	28	HW	KON/WZ	5	**165558**	48, 52
160	1,6	20	24	HW	WZ	25	**166100**	76
160	1,8	16	48	HW	WZ	10	**060574**	29
160	1,8	20	32	HW	WZ	5	**166102**	76
160	1,8	20	48	HW	FZ/TR	5	**166311**	79
160	1,8	20	42	HW	WZ/WZ/ WZ/FZ	10	**166620**	75
160	1,8	20	18	HW	WZ	25	**166101**	76
160	2,0	20	48	HW	FZFA/FZFA	0	**163529**	81
160	2,2	20	48	HW	FZFA/FZFA	5	**161008**	82
160	2,2	20	4	DP	FZ	5	**190752**	84
160	2,5	20	56	HW	FZ/TR	-5	**166350**	80
160	2,5	20	30	DP	HZFA/ WZFA	10	**190751**	72
160	2,5	20	24	HW	WZ	15	**166117**	76
160	2,5	20	48	HW	WZ	15	**166118**	76
160	2,5	20	12	HW	WZ	20	**166116**	76
160	2,6	20	48	HW	FZ/TR	5	**166300**	79
160	3,2	20	32	HW	KON/WZ	5	**165559**	48
160	3,2	20	4	DP	P	5	**190302**	84
160	4,3	55	30	DP	KON/FZ	10	**190566**	50, 52
160	4,4	30	36	HW	KON/WZ	5	**165560**	48
160	4,4	45	36	HW	KON/WZ	5	**165561**	48
160	4,4	55	36	HW	KON/WZ	5	**165562**	48, 52
165	1,8	20	48	HW	FZ/TR	5	**166312**	79
165	1,8	20	42	HW	WZ/WZ/ WZ/FZ	10	**166621**	75
165	1,8	20	18	HW	WZ	15	**166159**	76
165	2,0	20	48	HW	FZFA/FZFA	0	**163530**	81
165	2,2	20	56	HW	FZ/TR	-5	**166351**	80
165	2,2	20	48	HW	FZFA/FZFA	5	**161009**	82
165	2,2	20	4	DP	FZ	5	**190753**	84
165	2,2	20	48	HW	WZ	10	**166104**	76
165	2,2	20	24	HW	WZ	15	**166119**	76
165	2,4	20	12	HW	WZ	15	**166103**	76
170	2,5	30	48	HW	WZ	10	**166120**	76
180	1,3	60	32	HW	FZ	20	**057418**	12
180	1,5	60	21	HW	FZ	20	**057443**	12
180	1,6	16	56	HW	WZ	10	**060591**	29
180	1,8	60	32	HW	FZ	20	**057412**	12
180	1,8	60	21	HW	FZ	20	**057444**	12
180	2,2	30	18	HW	FZ	15	**165300**	18
180	2,4	16	58	HW	WZ	10	**059665**	29
180	2,4	30	30	HW	WZ	10	**163101**	27
180	2,4	30	24	HW	FZ	15	**165301**	18
180	2,5	20	48	HW	WZ	10	**166122**	76
180	2,5	20	24	HW	WZ	15	**166121**	76

D mm	SB mm	BO mm	Z	QAL	ZF	SW °	ID	Page
180	2,5	30	48	HW	WZ	10	**166105**	76
180	2,5	30	35	DP	HZFA/ WZFA	10	**190713**	72
180	2,5	30	24	HW	WZ	15	**166123**	76
180	2,5	40	35	DP	HZFA/ WZFA	10	**190714**	72
180	3,0 - 3,8	22	36	HW	WZ	10	**165410**	38
180	3,0	30	60	HW	WZ/WZ/FZ	10	**161250**	71
180	3,0	30	60	HW	WZ/WZ/FZ	10	**161267**	71
180	3,0	30	24	HW	WZ	10	**163102**	27
180	3,0	40	60	HW	WZ/WZ/FZ	10	**161251**	71
180	3,0 - 3,8	50	36	HW	FZ	10	**165413**	38
180	3,2	16	42	HW	FZ/TR	5	**166301**	79
180	3,2	20	42	HW	FZ/TR	-5	**166352**	80
180	3,2	20	36	HW	KON/WZ	5	**165563**	48
180	3,2	30	36	HW	KON/WZ	5	**165587**	48
180	3,2	30	58	HW	WZ	10	**163103**	27
180	3,2	30	48	HW	FZ	10	**165378**	36
180	3,2	30	36	DP	DZ/TR	10	**190747**	68
180	3,2	65	48	HW	FZ	10	**165379**	36
180	3,2	65	48	HW	FZ	10	**165380**	36
180	3,2	65	58	HW	FZ	10	**165381**	36
180	3,2	65	58	HW	FZ	10	**165382**	36
180	3,2	65	24	DP	FZ	10	**190660**	37
180	3,2	65	24	DP	FZ	10	**190661**	37
180	3,2	65	36	DP	FZ	10	**190662**	37
180	3,2	65	36	DP	FZ	10	**190663**	37
180	3,2	65	48	DP	FZ	10	**190664**	37
180	3,2	65	48	DP	FZ	10	**190665**	37
180	3,5	30	30	HW	WZ	10	**163104**	27
180	3,8	60	24	HW	WZ	20	**165255**	13
180	4,3	30	30	DP	KON/FZ	10	**190567**	50, 52-54
180	4,3	45	30	DP	KON/FZ	10	**190568**	50, 52-53
180	4,4	20	36	HW	KON/WZ	5	**165564**	48
180	4,4	20	28	HW	KON/FZ	5	**165630**	49
180	4,4	30	30	HW	KON/FZ	5	**165632**	49, 52-54
180	4,4	45	30	HW	KON/WZ	5	**165565**	48, 52-53
180	4,4	45	36	HW	KON/WZ	5	**165566**	48, 52-53
180	4,4	45	36	HW	KON/FZ	5	**165633**	49, 52-53
180	4,5	50	36	HW	KON/WZ	5	**165567**	48
180	4,55	30	36	HW	WZFA	10	**165681**	51
180	4,7	45	30	DP	KON/FZ	10	**190569**	50, 53
180	4,8	45	36	HW	KON/FZ	5	**165634**	49, 53
180	5,8	20	36	HW	KON/FZ	5	**165631**	49
184	1,8	20	42	HW	WZ/WZ/ WZ/FZ	10	**166624**	75
184	2,5	20	24	HW	WZ	15	**166124**	76
184	3,2	20	4	DP	P	5	**190696**	84
190	1,8	30	54	HW	FZ/TR	5	**166313**	79
190	1,8	30	42	HW	WZ/WZ/ WZ/FZ	10	**166622**	75
190	1,8	30	24	HW	WZ	15	**166160**	76
190	2,0	30	54	HW	FZFA/FZFA	0	**163531**	81
190	2,2	30	4	DP	FZ	5	**190754**	84
190	2,5	30	24	HW	WZ	20	**166128**	76
190	2,8	16	48	HW	WZ	10	**166126**	76
190	2,8	16	24	HW	WZ	15	**166125**	76
190	2,8	30	68	HW	FZ/TR	-5	**166354**	80
190	2,8	30	54	HW	FZ/TR	5	**166302**	79
190	2,8	30	48	HW	WZ	10	**166129**	76
190	2,8	30	16	HW	WZ	20	**166127**	76
190	3,2	20	4	DP	P	5	**190303**	84
190	3,2	30	4	DP	P	5	**190745**	84
200	1,5	60	36	HW	FZ	20	**057421**	12
200	1,5	60	21	HW	FZ	20	**057445**	12
200	1,8	20	80	HW	FZFA/FZFA	-5	**060274**	62
200	1,8	60	21	HW	FZ	20	**057446**	12
200	2,0	16	64	HW	WZ	10	**059666**	29
200	2,0	30	24	HW	FZ	20	**163575**	16
200	2,4	30	36	HW	WZ	10	**163105**	27
200	2,4	30	60	HW	WZ	10	**163106**	27
200	2,4	30	18	HW	FZ	15	**165302**	18
200	2,4	30	24	HW	FZ	15	**165303**	18
200	2,4	40	24	HW	FZ	20	**163550**	17
200	2,5	30	40	DP	HZFA/ WZFA	10	**190715**	72
200	2,5	30	40	DP	HZFA/ WZFA	10	**190716**	72
200	2,8	20	84	HW	FZ/TR	5	**166303**	79
200	3,0	30	65	HW	WZ/WZ/FZ	10	**161253**	71
200	3,0	30	65	HW	WZ/WZ/FZ	10	**161254**	71
200	3,0	30	24	HW	WZ	10	**163107**	27
200	3,0	30	48	HW	WZ	10	**163108**	27
200	3,0	30	60	HW	WZ	10	**163109**	27
200	3,0	30	34	HW	WZ	10	**166130**	76
200	3,0	30	48	HW	WZ	10	**166131**	76
200	3,2	30	60	HW	FZ/TR	-5	**166356**	80
200	3,2	30	60	HW	KON/WZ	5	**165571**	48
200	3,2	30	48	HW	FZ/TR	5	**166304**	79
200	3,2	30	54	HW	FZ	10	**165383**	36
200	3,2	30	18	HW	FZ	25	**165108**	19
200	3,8	60	24	HW	WZ	20	**165259**	13
200	4,3	20	30	DP	KON/FZ	10	**190570**	50, 54
200	4,3	30	30	DP	KON/FZ	10	**190571**	50
200	4,3	45	30	DP	KON/FZ	10	**190572**	50, 53
200	4,3	65	30	DP	KON/FZ	10	**190615**	50, 55
200	4,3	80	30	DP	KON/FZ	10	**190616**	50
200	4,4	20	36	HW	KON/WZ	5	**165569**	48, 54
200	4,4	30	36	HW	KON/WZ	5	**165572**	48
200	4,4	45	36	HW	KON/WZ	5	**165574**	48, 53
200	4,4	65	36	HW	KON/WZ	5	**165576**	48, 55
200	4,4	80	36	HW	KON/FZ	5	**165637**	49, 52
200	4,7	45	30	DP	KON/FZ	10	**190573**	50
200	4,7	65	30	DP	KON/FZ	10	**190574**	50, 55
200	4,8	20	36	HW	KON/WZ	5	**165573**	48, 54
200	4,8	45	36	HW	KON/FZ	5	**165636**	49
200	4,8	65	36	HW	KON/WZ	5	**165577**	48, 55
200	5,0	30	60	HW	WZ/WZ/FZ	15	**166012**	73
200	5,0	30	24	HW	FZ	20	**165250**	13
200	5,8	45	36	HW	KON/WZ	5	**165575**	48, 52
200	6,2	20	36	HW	KON/WZ	5	**165570**	48
200	6,8	20	36	HW	KON/FZ	5	**165635**	49

D mm	SB mm	BO mm	Z	QAL	ZF	SW °	ID	Page
210	2,0	30	60	HW	FZFA/FZFA	0	**163532**	81
210	2,2	100	36	DP	FZ	3	**190676**	56
210	2,2	115	36	DP	FZ	3	**190677**	56
210	2,4	30	64	HW	FZ/TR	-5	**166357**	80
210	2,4	30	68	HW	FZFA/FZFA	5	**161011**	82
210	2,4	30	64	HW	WZ	10	**166135**	76
210	2,4	30	24	HW	WZ	15	**166133**	76
210	2,4	30	42	HW	WZ	20	**166134**	76
210	2,8	30	60	HW	WZ	-5	**166252**	78
210	2,8	30	60	HW	FZ/TR	-5	**166358**	80
210	3,2	30	18	HW	FZ	20	**165109**	19
215	4,4	50	42	HW	KON/WZ	5	**165578**	48
216	1,8	30	48	HW	WZ	-5	**166260**	78
216	2,2	30	64	HW	FZ/TR	-5	**166366**	80
216	3,0	30	24	HW	WZ	-5	**166253**	78
216	3,0	30	48	HW	WZ	-5	**166254**	78
216	3,0	30	64	HW	WZ	-5	**166255**	78
216	3,0	30	64	HW	FZ/TR	-5	**166359**	80
220	1,2	60	27	HW	FZ	20	**057475**	12
220	1,2	65	24	HW	FZ	20	**057474**	12
220	1,3	60	24	HW	FZ	25	**057476**	12
220	1,3	60	32	HW	FZ	25	**057478**	12
220	1,3	65	24	HW	FZ	25	**057477**	12
220	1,3	65	32	HW	FZ	25	**057479**	12
220	1,4	60	32	HW	FZ	20	**057464**	12
220	1,4	60	24	HW	FZ	25	**057480**	12
220	1,4	65	32	HW	FZ	20	**057465**	12
220	1,4	65	24	HW	FZ	25	**057481**	12
220	2,4	40	24	HW	FZ	20	**163551**	17
220	2,5	30	45	DP	HZFA/ WZFA	10	**190717**	72
220	2,5	40	45	DP	HZFA/ WZFA	10	**190718**	72
220	3,0	30	70	HW	WZ/WZ/FZ	10	**161255**	71
220	3,0	40	70	HW	WZ/WZ/FZ	10	**161256**	71
220	3,1	45	48	DP	KON/FZ	10	**190744**	50
220	3,2	30	72	HW	FZ/TR	-5	**166360**	80
220	3,2	30	64	HW	FZ/TR	10	**163000**	34
220	3,2	30	42	HW	HZ/DZ	10	**163050**	33
220	3,2	30	36	HW	WZ	10	**163110**	27
220	3,2	30	60	HW	WZ	10	**163111**	27
220	3,2	30	60	HW	WZ	10	**166107**	76
220	3,2	30	34	HW	WZ	15	**166136**	76
220	3,2	45	60	HW	KON/FZ	5	**165638**	49
220	3,35	30	48	HW	FZ/TR	10	**165676**	51
220	3,8	60	24	HW	WZ	20	**165260**	13
220	3,8	60	24	HW	WZ	20	**165262**	13
220	3,8	65	24	HW	WZ	20	**165261**	13
220	5,0	30	24	HW	FZ	20	**165251**	13
220	6,5	20	36	HW	KON/WZ	5	**165579**	48, 53-54
225	1,5	60	25	HW	FZ	20	**057447**	12
225	1,6	60	32	HW	FZ	25	**057482**	12
225	1,8	60	25	HW	FZ	20	**057448**	12
225	2,0	40	40	HW	FZ	20	**163600**	12
225	2,0	60	25	HW	FZ	20	**057449**	12
225	2,2	30	64	HW	FZFA/FZFA	0	**163533**	81
225	2,4	30	24	HW	FZ	15	**165304**	18
225	2,6	30	68	HW	FZ/TR	-5	**166361**	80
225	2,6	30	48	HW	WZ	10	**166138**	76
225	2,6	30	32	HW	WZ	20	**166137**	76

D mm	SB mm	BO mm	Z	QAL	ZF	SW °	ID	Page
225	2,8	30	24	HW	FZ	15	**165305**	18
225	3,2	30	6	DP	P	5	**190304**	84
225	3,8	60	24	HW	WZ	20	**165263**	13
225	5,0	30	24	HW	FZ	20	**165252**	13
225	5,0	60	40	HW	FZ	20	**165256**	13
230	2,5	30	48	HW	WZ	15	**166108**	76
230	2,5	30	24	HW	WZ	20	**166140**	76
230	3,2	30	34	HW	WZ	15	**166141**	76
235	2,5	30	24	HW	WZ	15	**166156**	76
235	2,5	30	56	HW	WZ	15	**166157**	76
235	3,2	30	24	HW	WZ	15	**166142**	76
235	3,2	30	34	HW	WZ	15	**166143**	76
240	2,5	30	50	DP	HZFA/ WZFA	10	**190719**	72
240	2,5	40	50	DP	HZFA/ WZFA	10	**190720**	72
240	2,8	40	24	HW	FZ	15	**165306**	18
240	3,0	30	75	HW	WZ/WZ/FZ	10	**161257**	71
240	3,0	30	48	HW	WZ	10	**166145**	76
240	3,0	30	34	HW	WZ	15	**166144**	76
240	3,0	40	75	HW	WZ/WZ/FZ	10	**161258**	71
240	3,0	40	30	HW	WZ	15	**165337**	25
250	1,7	30	80	HW	WZ	10	**058520**	29
250	1,7	60	36	HW	FZ	20	**057433**	12
250	1,7	60	25	HW	FZ	20	**057450**	12
250	2,0	30	100	HW	FZFA/FZFA	-5	**060275**	62
250	2,0	60	36	HW	FZ	20	**057434**	12
250	2,0	60	25	HW	FZ	20	**057451**	12
250	2,0	80	36	HW	WZ	15	**163576**	16
250	2,0	100	48	DP	FZ	3	**190678**	56
250	2,0	100	48	DP	FZ	3	**190679**	56
250	2,0	115	48	DP	FZ	3	**190680**	56
250	2,2	100	36	DP	FZ	3	**190681**	56
250	2,2	100	36	DP	FZ	3	**190682**	56
250	2,2	100	48	DP	FZ	3	**190684**	56
250	2,2	100	48	DP	FZ	3	**190685**	56
250	2,2	115	36	DP	FZ	3	**190683**	56
250	2,2	115	48	DP	FZ	3	**190686**	56
250	2,4	30	48	HW	WZ	-5	**166256**	78
250	2,4	30	60	HW	WZ	-5	**166257**	78
250	2,4	30	40	HW	WZ	10	**163112**	27
250	2,4	30	80	HW	WZ	10	**163113**	27
250	2,4	30	24	HW	FZ	20	**163558**	17
250	2,4	40	24	HW	FZ	20	**163552**	17
250	2,4	60	24	HW	FZ	20	**163700**	17
250	2,4	60	40	HW	FZ	20	**163701**	17
250	2,4	70	24	HW	FZ	20	**163553**	17
250	2,4	80	32	HW	WZ	15	**163577**	16
250	2,4	80	40	HW	WZ	15	**165309**	18
250	2,4	80	24	HW	FZ	20	**163554**	17
250	2,5	30	50	DP	HZFA/ WZFA	10	**190721**	72
250	2,8	30	72	HW	FZFA/FZFA	5	**161012**	82
250	2,8	30	24	HW	FZ	15	**165307**	18
250	2,8	30	60	HW	WZ	20	**166147**	76
250	2,8	30	24	HW	WZ	25	**166146**	76
250	2,8	70	24	HW	FZ	15	**165308**	18
250	3,0	30	80	HW	WZ/WZ/FZ	10	**161259**	71
250	3,2	30	48	HW	HZ/DZ	-5	**163076**	33
250	3,2	30	80	HW	WZ	-5	**163225**	28
250	3,2	30	80	HW	WZ	-5	**166258**	78

D mm	SB mm	BO mm	Z	QAL	ZF	SW °	ID	Page
250	3,2	30	60	HW	FZ/TR	-5	**166362**	80
250	3,2	30	80	HW	FZ/TR	-5	**166363**	80
250	3,2	30	60	HW	FZ/TR	5	**166305**	79
250	3,2	30	80	HW	FZ/TR	5	**166306**	79
250	3,2	30	54	HW	HZ/DZ	10	**161300**	32
250	3,2	30	60	HW	FZ/TR	10	**163002**	34
250	3,2	30	80	HW	FZ/TR	10	**163003**	34
250	3,2	30	48	HW	HZ/DZ	10	**163051**	33
250	3,2	30	40	HW	WZ	10	**163114**	27
250	3,2	30	60	HW	WZ	10	**163115**	27
250	3,2	30	80	HW	WZ	10	**163116**	27
250	3,2	30	50	DP	HZFA/ WZFA	10	**190697**	31
250	3,2	30	48	DP	DZ/TR	10	**190748**	68
250	3,2	30	60	HW	TR/TR	15	**161135**	45
250	3,2	30	18	HW	FZ	20	**165110**	19
250	3,2	30	18	HW	FZ	20	**166050**	20
250	3,2	30	24	HW	WZ	20	**166076**	20
250	3,2	32	60	HW	FZ/TR	5	**166307**	79
250	3,2	32	80	HW	FZ/TR	5	**166308**	79
250	3,2	40	80	HW	FZ/TR	5	**166309**	79
250	3,2	70	20	HW	WZ	20	**165200**	15
250	3,2	100	48	HW	FZ	10	**061434**	56
250	3,5	30	18	HW	FZ	25	**165008**	14
250	3,5	80	18	HW	FZ	25	**165009**	14
250	3,8	60	24	HW	WZ	20	**165264**	13
250	4,0	30	18	HW	FZ	20	**165101**	19
250	4,4	30	42	HW	KON/FZ	5	**165639**	49
250	4,4	30	18	HW	FZ	25	**165000**	14
250	4,4	80	18	HW	FZ	25	**165001**	14
250	4,55	30	48	HW	FZ/TR	10	**165677**	51
250	5,0	30	24	HW	FZ	20	**165253**	13
250	5,0	30	36	HW	FZ	20	**165254**	13
250	8,0	80	24	HW	FZ	15	**165257**	13
254	2,2	30	72	HW	FZFA/FZFA	0	**163534**	81
255	2,8	30	60	HW	WZ	-5	**166259**	78
255	2,8	30	80	HW	WZ/WZ/FZ	10	**161200**	30
260	2,4	30	68	HW	FZ/TR	-5	**166364**	80
260	2,5	30	60	HW	WZ	-5	**166250**	78
260	2,5	30	80	HW	WZ	-5	**166251**	78
260	3,2	30	60	HW	WZ	10	**166148**	76
270	2,4	60	28	HW	FZ	20	**163702**	17
275	3,2	30	88	HW	FZ/TR	-5	**166365**	80
275	3,4	40	72	HW	FZ/TR	5	**166310**	79
280	2,5	30	55	DP	HZFA/ WZFA	10	**190722**	72
280	3,0	30	85	HW	WZ/WZ/FZ	10	**161260**	71
280	3,2	30	60	HW	FZ/TR	10	**163004**	34
280	3,2	30	48	HW	WZ	10	**166149**	77
280	3,2	30	60	HW	WZ	10	**166150**	77
280	3,2	30	60	HW	TR/TR	15	**161136**	45
280	3,2	32	96	HW	FZ/TR	5	**165725**	58
280	4,4	30	48	HW	KON/FZ	5	**165640**	49
280	4,55	30	60	HW	FZ/TR	10	**165678**	51
280	4,55	45	84	HW	WZ	10	**165684**	51
280	4,8	45	72	HW	KON/WZ	5	**165581**	48
300	1,7	30	96	HW	WZ	10	**058521**	29
300	2,2	30	120	HW	FZFA/FZFA	-5	**060276**	62
300	2,2	30	80	HW	FZFA/FZFA	0	**163535**	81
300	2,4	30	48	HW	WZ	10	**163117**	27
300	2,4	30	96	HW	WZ	10	**163118**	27
300	2,8	30	30	HW	FZ	25	**163555**	17
300	2,8	80	28	HW	WZ	15	**163578**	16
300	2,8	80	28	HW	WZFA	15	**165310**	18
300	2,8	80	48	HW	TR/TR	15	**165311**	18
300	2,8	80	30	HW	FZ	25	**163556**	17
300	3,0	30	72	HW	FZFA/FZFA	5	**161005**	63
300	3,0	30	96	HW	FZFA/FZFA	5	**161006**	63
300	3,0	50	100	HW	WZ/WZ/FZ	10	**161266**	71
300	3,2	30	96	HW	FZ/TR	-5	**161380**	61
300	3,2	30	96	HW	FZ/TR	-5	**161381**	61
300	3,2	30	60	HW	WZ	-5	**165514**	23
300	3,2	30	96	HW	WZ	-5	**165515**	23
300	3,2	30	72	HW	FZ/TR	-5	**165825**	60
300	3,2	30	96	HW	FZ/TR	-5	**165826**	60
300	3,2	30	120	HW	FZ/TR	-5	**165827**	60
300	3,2	30	96	HW	FZ/TR	5	**161360**	59
300	3,2	30	96	HW	FZ/TR	5	**161361**	59
300	3,2	30	96	HW	WZFA	5	**161500**	65
300	3,2	30	72	HW	KON/FZ	5	**165641**	49
300	3,2	30	72	HW	FZ/TR	5	**165726**	58
300	3,2	30	96	HW	FZ/TR	5	**165727**	58
300	3,2	30	8	DP	P	5	**190305**	84
300	3,2	30	72	HW	WZFA	10	**161502**	65
300	3,2	30	48	HW	WZFA	10	**161504**	65
300	3,2	30	72	HW	FZ/TR	10	**163005**	34
300	3,2	30	96	HW	FZ/TR	10	**163006**	34
300	3,2	30	36	HW	WZ	10	**163119**	27
300	3,2	30	48	HW	WZ	10	**163120**	27
300	3,2	30	72	HW	WZ	10	**163121**	27
300	3,2	30	96	HW	WZ	10	**163122**	27
300	3,2	30	72	HW	TR/TR	15	**161138**	45
300	3,2	30	72	HW	TR/TR	15	**161139**	45
300	3,2	30	72	HW	TR/TR	15	**163370**	44
300	3,2	30	24	HW	FZ	20	**165111**	19
300	3,2	30	28	HW	WZ	20	**166077**	20
300	3,2	32	72	HW	FZ/TR	-5	**165828**	60
300	3,2	32	96	HW	FZ/TR	-5	**165829**	60
300	3,2	32	120	HW	FZ/TR	-5	**165830**	60
300	3,2	70	24	HW	WZ	20	**165201**	15
300	3,4	80	28	HW	FZ	15	**165312**	18
300	3,5	30	96	HW	WZ	-5	**161330**	24
300	3,5	30	96	HW	WZ	-5	**161331**	24
300	3,5	30	96	HW	WZ	5	**163200**	28
300	3,5	30	14	HW	FZ	20	**166051**	20
300	3,5	30	20	HW	FZ	25	**165010**	14
300	3,5	70	20	HW	FZ	25	**165011**	14
300	3,5	80	20	HW	FZ	25	**165012**	14
300	3,6	30	20	HW	FZ/TR	10	**163500**	66
300	3,6	30	42	HW	FZ/TR	10	**163501**	66
300	4,0	30	24	HW	FZ	20	**165102**	19
300	4,0	80	28	HW	TR/TR	15	**165313**	18
300	4,0	80	48	HW	TR/TR	15	**165314**	18
300	4,3	30	48	DP	KON/FZ	10	**190743**	50
300	4,4	30	48	HW	KON/WZ	5	**165582**	48, 54
300	4,4	30	60	DP	HZFA	5	**190666**	63
300	4,4	30	60	HW	TR/TR	15	**161137**	45, 53
300	4,4	30	48	HW	WZ	15	**163300**	41, 53
300	4,4	30	60	HW	TR/TR	15	**163369**	44, 53
300	4,4	30	60	HW	FZ/TR	15	**163400**	42, 53

D mm	SB mm	BO mm	Z	QAL	ZF	SW °	ID	Page
300	4,4	30	60	DP	TR/TR	15	**190706**	47
300	4,4	50	48	HW	KON/WZ	5	**165583**	48
300	4,4	60	72	HW	TR/TR	15	**161140**	45, 52
300	4,4	60	72	HW	TR/TR	15	**163371**	44, 52
300	4,4	60	72	HW	FZ/TR	15	**163401**	42, 52
300	4,4	65	72	HW	KON/WZ	5	**165584**	48
300	4,4	65	48	HW	KON/WZ	5	**165585**	48
300	4,4	65	60	HW	TR/TR	15	**161141**	45, 55
300	4,4	65	60	HW	TR/TR	15	**163372**	44, 55
300	4,4	65	60	HW	FZ/TR	15	**163402**	42, 55
300	4,4	75	60	HW	FZ/TR	15	**163403**	42
300	4,4	80	60	HW	TR/TR	15	**161142**	45, 52
300	4,4	80	60	HW	FZ/TR	15	**163456**	42, 52
300	4,55	30	72	HW	WZFA	10	**165682**	51
300	4,55	65	72	HW	WZFA	10	**165683**	51
300	5,0	30	20	HW	FZ	25	**165002**	14
303	3,2	30	60	HW	HZ/DZ	-5	**163077**	33
303	3,2	30	100	HW	WZ/WZ/FZ	10	**161201**	30
303	3,2	30	68	HW	HZ/DZ	10	**161301**	32
303	3,2	30	60	HW	HZ/DZ	10	**163054**	33
303	3,2	30	60	DP	DZ/TR	10	**190673**	68
303	3,2	30	96	DP	DZ/TR	10	**190674**	68
303	3,2	30	60	DP	HZFA/ WZFA	10	**190698**	31
303	3,2	30	60	DP	HZFA/ WZFA	10	**190728**	72
303	3,5	30	96	HW	WZ	-5	**163226**	28
303	3,5	30	60	HW	TR/TR	10	**161028**	64
303	3,5	30	60	HW	HZ/DZ	10	**163052**	33
305	2,4	25.4	80	HW	FZFA/FZFA	0	**163536**	81
305	3,2	30	60	HW	WZ	-5	**165516**	23
308	3,2	60	96	DP	TR/TR	10	**190746**	47
308	3,2	60	96	HW	TR/TR	15	**161143**	45
308	3,2	60	96	HW	FZ/TR	15	**163404**	42
310	4,4	60	72	HW	TR/TR	15	**161144**	45
310	4,4	60	72	HW	FZ/TR	15	**163405**	42
315	3,0	30	48	HW	WZ	15	**166152**	77
315	3,2	30	72	HW	WZ	10	**166153**	77
315	3,2	30	28	HW	WZ	20	**166151**	77
320	3,2	30	84	HW	FZ/TR	5	**165728**	58
320	3,2	70	28	HW	WZ	20	**165202**	15
320	4,4	30	60	HW	FZ/TR	15	**163406**	42, 53
320	4,4	50	60	HW	TR/TR	15	**161145**	45
320	4,4	50	60	HW	TR/TR	15	**163374**	44
320	4,4	60	72	HW	TR/TR	15	**163394**	44
320	4,4	65	60	HW	TR/TR	15	**161146**	45, 55
320	4,4	65	60	HW	TR/TR	15	**163375**	44
320	4,4	65	60	HW	FZ/TR	15	**163407**	42, 55
320	4,4	75	60	HW	TR/TR	15	**163376**	44
320	4,4	80	60	HW	TR/TR	15	**163377**	44
320	4,4	80	60	HW	FZ/TR	15	**163457**	42
330	3,2	30	96	HW	FZ/TR	-5	**165831**	60
330	3,2	32	96	HW	FZ/TR	-5	**165832**	60
340	4,4	80	72	HW	TR/TR	15	**161148**	45, 52
340	4,4	80	72	HW	FZ/TR	15	**163458**	42, 52
350	2,4	30	140	HW	FZFA/FZFA	-5	**060279**	62
350	2,8	30	30	HW	FZ	25	**163557**	17
350	3,2	30	108	HW	FZ/TR	-5	**161382**	61
350	3,2	30	108	HW	FZ/TR	-5	**161383**	61
350	3,2	30	36	HW	WZ	-5	**165517**	23
350	3,2	30	60	HW	WZ	-5	**165518**	23
350	3,2	30	108	HW	FZ/TR	-5	**165837**	60
350	3,2	30	108	HW	FZ/TR	5	**161362**	59
350	3,2	30	108	HW	FZ/TR	5	**161363**	59
350	3,2	30	108	HW	FZ/TR	5	**165730**	58
350	3,2	30	70	DP	HZFA/ WZFA	10	**190699**	31
350	3,2	30	70	DP	HZFA/ WZFA	10	**190729**	72
350	3,2	30	24	HW	FZ	20	**165113**	19
350	3,2	30	32	HW	WZ	20	**166078**	20
350	3,2	32	84	HW	FZ/TR	5	**165731**	58
350	3,4	30	84	HW	FZ/TR	-5	**165833**	60
350	3,4	30	84	HW	FZ/TR	5	**165729**	58
350	3,5	30	108	HW	WZ	-5	**161332**	24
350	3,5	30	108	HW	WZ	-5	**161333**	24
350	3,5	30	108	HW	WZ	-5	**165519**	23
350	3,5	30	96	HW	FZFA/FZFA	5	**161007**	63
350	3,5	30	108	HW	WZFA	5	**161501**	65
350	3,5	30	108	HW	WZ	5	**163201**	28
350	3,5	30	110	HW	WZ/WZ/FZ	10	**161263**	71
350	3,5	30	80	HW	HZ/DZ	10	**161302**	32
350	3,5	30	84	HW	WZFA	10	**161503**	65
350	3,5	30	56	HW	WZFA	10	**161505**	65
350	3,5	30	84	HW	FZ/TR	10	**163007**	34
350	3,5	30	108	HW	FZ/TR	10	**163008**	34
350	3,5	30	72	HW	HZ/DZ	10	**163053**	33
350	3,5	30	54	HW	WZ	10	**163123**	27
350	3,5	30	72	HW	WZ	10	**163124**	27
350	3,5	30	84	HW	WZ	10	**163125**	27
350	3,5	30	108	HW	WZ	10	**163126**	27
350	3,5	30	32	HW	WZ	10	**163134**	27
350	3,5	30	24	HW	TR	10	**166025**	83
350	3,5	30	72	DP	DZ/TR	10	**190749**	68
350	3,5	30	72	HW	WZ	15	**165976**	70
350	3,5	30	12	HW	FZ	20	**163025**	35
350	3,5	30	16	HW	FZ	20	**166052**	20
350	3,5	70	28	HW	WZ	20	**165203**	15
350	3,6	30	16	HW	WZ	15	**165975**	70
350	3,6	40	108	HW	FZ/TR	-5	**165838**	60
350	3,8	30	84	HW	FZ/TR	-5	**165834**	60
350	3,8	30	24	HW	FZ/TR	10	**163502**	66
350	3,8	30	48	HW	FZ/TR	10	**163503**	66
350	3,8	30	48	HW	FZFA/FZFA	10	**165925**	67
350	3,8	32	84	HW	FZ/TR	-5	**165835**	60
350	3,8	40	84	HW	FZ/TR	-5	**165836**	60
350	4,0	30	24	HW	FZ	25	**165013**	14
350	4,0	80	24	HW	FZ	25	**165014**	14
350	4,4	30	70	DP	HZFA	5	**190667**	63
350	4,4	30	72	HW	WZ/FA	15	**161029**	64
350	4,4	30	72	HW	TR/TR	15	**161149**	45, 52-54
350	4,4	30	54	HW	WZ	15	**163301**	41, 52, 54
350	4,4	30	72	HW	WZ	15	**163302**	41, 52, 54
350	4,4	30	72	HW	TR/TR	15	**163379**	44, 52-55

D mm	SB mm	BO mm	Z	QAL	ZF	SW °	ID	Page
350	4,4	30	72	HW	FZ/TR	15	**163408**	42, 52-54
350	4,4	30	72	DP	TR/TR	15	**190707**	47, 52-54
350	4,4	30	24	HW	FZ	20	**165104**	19
350	4,4	60	72	HW	WZ/FA	15	**161030**	64
350	4,4	60	72	HW	TR/TR	15	**161150**	46, 52-53
350	4,4	60	72	HW	WZ	15	**163304**	41, 52-53
350	4,4	60	72	HW	TR/TR	15	**163380**	44, 52-53
350	4,4	60	72	HW	FZ/TR	15	**163409**	42, 52-53
350	4,4	60	72	DP	TR/TR	15	**190708**	47, 52-53
350	4,4	75	72	HW	TR/TR	15	**161151**	46
350	4,4	75	72	HW	TR/TR	15	**163395**	44
350	4,4	75	72	HW	FZ/TR	15	**163410**	42
350	4,4	80	54	HW	WZ	15	**163305**	41
350	4,4	80	72	HW	FZ/TR	15	**163454**	42
350	4,55	75	72	HW	FZ/TR	10	**165679**	51
350	5,0	30	24	HW	FZ	25	**165003**	14
350	5,0	80	24	HW	FZ	25	**165004**	14
355	2,4	25.4	80	HW	FZFA/FZFA	0	**163538**	81
355	3,0	30	120	HW	WZ/WZ/FZ	10	**161202**	30
355	3,2	30	72	HW	WZ	-5	**165520**	23
355	3,2	30	16	HW	WZ	20	**166154**	77
355	3,2	30	32	HW	WZ	20	**166155**	77
355	4,4	30	72	HW	WZ	15	**163306**	41, 53
355	4,4	65	72	HW	TR/TR	15	**161152**	46, 55
355	4,4	65	72	HW	TR/TR	15	**163381**	44, 55
355	4,4	65	72	HW	FZ/TR	15	**163412**	42, 55
355	4,4	75	72	HW	FZ/TR	15	**163413**	42
355	4,4	80	72	HW	TR/TR	15	**161153**	46, 55
360	4,4	30	72	HW	TR/TR	15	**161154**	46, 54
360	4,4	30	72	HW	TR/TR	15	**163382**	44, 54
360	4,4	30	72	HW	FZ/TR	15	**163414**	42, 54
360	4,4	65	72	HW	FZ/TR	15	**163415**	42, 55
370	3,5	30	108	HW	WZ	10	**165338**	25
370	3,8	30	96	HW	FZ/TR	5	**165732**	58
370	4,4	30	72	HW	TR/TR	15	**161155**	46
370	4,4	30	72	HW	FZ/TR	15	**163416**	42
380	3,8	32	108	HW	FZ/TR	-5	**165839**	60
380	4,4	30	72	HW	TR/TR	15	**161156**	46
380	4,4	30	72	HW	WZ	15	**163319**	41
380	4,4	30	72	HW	TR/TR	15	**163383**	44, 52
380	4,4	50	72	HW	TR/TR	15	**161157**	46
380	4,4	50	72	HW	TR/TR	15	**163396**	44
380	4,4	50	72	HW	FZ/TR	15	**163417**	42
380	4,4	60	72	HW	TR/TR	15	**161158**	46, 53
380	4,4	60	72	HW	TR/TR	15	**163384**	44, 53
380	4,4	60	72	HW	FZ/TR	15	**163418**	42, 53
380	4,4	60	72	DP	TR/TR	15	**190709**	47
380	4,4	65	72	HW	TR/TR	15	**163386**	44
380	4,4	65	72	HW	FZ/TR	15	**163461**	42
380	4,4	75	72	HW	FZ/TR	15	**163420**	42
380	4,4	80	72	HW	TR/TR	15	**161160**	46, 52
380	4,4	80	72	HW	FZ/TR	15	**163459**	42, 52
380	4,8	60	84	HW	WZ/FA	15	**161031**	64
380	4,8	60	72	HW	TR/TR	15	**161159**	46, 53
380	4,8	60	54	HW	WZ	15	**163307**	41, 53
380	4,8	60	72	HW	TR/TR	15	**163385**	44, 53
380	4,8	60	72	HW	FZ/TR	15	**163419**	42, 53
380	4,8	60	84	HW	TR/TR	15	**163750**	44
380	4,8	60	72	DP	TR/TR	15	**190710**	47
400	3,0	30	84	HW	FZFA/FZFA	0	**163539**	81
400	3,2	30	130	HW	WZ/WZ/FZ	20	**161203**	30
400	3,5	30	120	HW	WZ	-5	**161334**	24
400	3,5	30	120	HW	WZ	-5	**161335**	24
400	3,5	30	48	HW	WZ	10	**163127**	27
400	3,5	30	60	HW	WZ	10	**163128**	27
400	3,5	30	84	HW	WZ	10	**163129**	27
400	3,5	30	96	HW	WZ	10	**163130**	27
400	3,5	30	120	HW	WZ	10	**163131**	27
400	3,5	30	120	HW	WZ	10	**165450**	22
400	3,5	30	140	HW	WZ	10	**165464**	22
400	3,5	30	14	HW	FZ	20	**163026**	35
400	3,8	30	42	HW	WZ	-5	**165521**	23
400	3,8	30	60	HW	WZ	-5	**165522**	23
400	3,8	30	120	HW	WZ	-5	**165523**	23
400	3,8	30	96	HW	FZ/TR	-5	**165840**	60
400	3,8	30	96	HW	FZ/TR	5	**165733**	58
400	3,8	30	28	HW	FZ/TR	10	**163504**	66
400	3,8	30	54	HW	FZ/TR	10	**163505**	66
400	3,8	30	28	HW	TR	10	**166026**	83
400	3,8	32	96	HW	FZ/TR	-5	**165841**	60
400	3,8	32	96	HW	FZ/TR	5	**165734**	58
400	3,8	40	96	HW	FZ/TR	-5	**165842**	60
400	3,8	50	96	HW	FZ/TR	-5	**165843**	60
400	3,8	50	96	HW	FZ/TR	5	**165735**	58
400	4,0	30	28	HW	FZ	20	**165114**	19
400	4,0	30	18	HW	FZ	20	**166053**	20
400	4,0	30	36	HW	WZ	20	**166079**	20
400	4,0	30	28	HW	FZ	25	**165015**	14
400	4,0	70	24	HW	WZ	20	**165204**	15
400	4,0	80	28	HW	FZ	25	**165016**	14
400	4,4	30	80	DP	HZFA	5	**762339**	63
400	4,4	30	60	HW	FZFA/FZFA	10	**165926**	67
400	4,4	30	72	HW	WZ/FA	15	**161032**	64
400	4,4	30	72	HW	TR/TR	15	**161161**	46, 53-54
400	4,4	30	60	HW	WZ	15	**163308**	41, 53-54
400	4,4	30	72	HW	WZ	15	**163309**	41, 53-54
400	4,4	30	72	HW	TR/TR	15	**163387**	44, 53-54
400	4,4	30	72	HW	FZ/TR	15	**163421**	43, 53-54
400	4,4	30	72	DP	TR/TR	15	**190711**	47, 53-54
400	4,4	60	72	HW	FZ/TR	15	**163422**	43
400	4,4	65	72	HW	TR/TR	15	**163388**	44
400	4,4	75	72	HW	TR/TR	15	**161162**	46
400	4,4	75	72	HW	FZ/TR	15	**163423**	43
400	4,4	80	72	HW	TR/TR	15	**161163**	46, 52, 55
400	4,4	80	72	HW	FZ/TR	15	**163455**	43, 52
400	5,0	30	28	HW	FZ	20	**165105**	19
400	5,0	30	28	HW	FZ	25	**165005**	14
400	5,0	80	28	HW	FZ	25	**165006**	14

D mm	SB mm	BO mm	Z	QAL	ZF	SW °	ID	Page
420	3,5	40	48	HW	WZ	-5	**165524**	23
420	3,8	30	108	HW	FZ/TR	-5	**165844**	60
420	3,8	30	96	HW	FZ/TR	5	**165736**	58
420	3,8	40	108	HW	FZ/TR	-5	**165845**	60
420	4,8	60	72	HW	TR/TR	15	**161164**	46
420	4,8	60	72	HW	FZ/TR	15	**163426**	43
430	3,5	30	96	HW	FZ/TR	5	**165737**	58
430	4,4	30	72	HW	TR/TR	15	**161165**	46
430	4,4	30	72	HW	WZ	15	**163310**	41, 52
430	4,4	30	72	HW	FZ/TR	15	**163427**	43, 52
430	4,4	65	72	HW	TR/TR	15	**163389**	44
430	4,4	75	72	HW	TR/TR	15	**161166**	46
430	4,4	75	72	HW	FZ/TR	15	**163428**	43
430	4,4	80	72	HW	TR/TR	15	**161167**	46, 52, 55
430	4,4	80	72	HW	TR/TR	15	**163397**	44
430	4,4	80	72	HW	FZ/TR	15	**163429**	43, 52, 55
440	7,0	75	12	HW	WZ	20	**165326**	25
450	3,0	30	120	HW	WZ	20	**058461**	29
450	3,5	30	158	HW	WZ	10	**165465**	22
450	3,6	30	140	HW	WZ/WZ/FZ	20	**161204**	30
450	3,8	30	48	HW	WZ	-5	**165525**	23
450	3,8	30	108	HW	FZ/TR	-5	**165846**	60
450	3,8	30	110	HW	FZ/TR	5	**165738**	58
450	3,8	30	66	HW	WZ	10	**163132**	27
450	3,8	32	108	HW	FZ/TR	-5	**165847**	60
450	3,8	32	96	HW	FZ/TR	5	**165739**	58
450	3,9	30	136	HW	WZ	10	**165466**	22
450	4,0	30	32	HW	TR	10	**166027**	83
450	4,0	30	28	HW	FZ	20	**165115**	19
450	4,0	30	20	HW	FZ	20	**166054**	20
450	4,0	30	42	HW	WZ	20	**166080**	20
450	4,4	30	90	DP	HZFA	5	**190668**	63
450	4,4	30	60	HW	FZ/TR	10	**165927**	67
450	4,4	30	72	HW	WZ/FA	15	**161033**	64
450	4,4	30	72	HW	TR/TR	15	**161168**	46
450	4,4	30	54	HW	WZ	15	**163311**	41
450	4,4	30	72	HW	WZ	15	**163312**	41
450	4,4	30	72	HW	FZ/TR	15	**163430**	43
450	4,4	30	28	HW	FZ	25	**165017**	14
450	4,4	80	72	HW	FZ/TR	15	**163432**	43
450	4,8	30	138	HW	WZ	10	**165451**	22
450	4,8	30	72	HW	FZ/TR	10	**165680**	51
450	4,8	60	72	HW	WZ/FA	15	**161034**	64
450	4,8	60	72	HW	TR/TR	15	**161169**	46, 53
450	4,8	60	72	HW	TR/TR	15	**163390**	45, 53
450	4,8	60	72	HW	FZ/TR	15	**163431**	43, 53
450	4,8	60	72	DP	TR/TR	15	**190712**	47, 53
450	4,8	80	72	HW	TR/TR	15	**163398**	45
450	4,8	80	72	HW	FZ/TR	15	**163433**	43, 55
450	5,0	30	108	HW	WZ	10	**165452**	22
450	5,0	30	28	HW	FZ	20	**165106**	19
450	5,0	30	28	HW	FZ	25	**165007**	14
460	4,4	30	48	HW	FZFA/FZFA	10	**165928**	67
460	4,4	30	72	HW	TR/TR	15	**161170**	46, 54
460	4,4	30	72	HW	TR/TR	15	**163391**	45, 54
460	4,4	30	72	HW	FZ/TR	15	**163434**	43, 54
470	4,4	75	96	HW	FZ/TR	15	**163435**	43
470	4,8	70	72	HW	TR/TR	15	**163392**	45

D mm	SB mm	BO mm	Z	QAL	ZF	SW °	ID	Page
480	4,4	30	72	HW	WZ	15	**163313**	41
480	4,4	30	72	HW	FZ/TR	15	**163436**	43
480	4,8	60	72	HW	FZ/TR	15	**163437**	43
480	4,8	80	72	HW	FZ/TR	15	**163438**	43, 55
500	3,8	30	72	HW	WZ	10	**163133**	27
500	4,0	30	36	HW	TR	10	**166028**	83
500	4,0	30	150	HW	WZ/WZ/FZ	20	**161205**	30
500	4,0	30	32	HW	FZ	20	**165116**	19
500	4,0	30	24	HW	FZ	20	**166055**	20
500	4,0	30	48	HW	WZ	20	**166081**	20
500	4,0	32	96	HW	FZ/TR	5	**165741**	58
500	4,0	32	120	HW	FZ/TR	5	**165742**	58
500	4,4	30	54	HW	WZ	-5	**165526**	23
500	4,4	30	120	HW	FZ/TR	-5	**165848**	60
500	4,4	30	120	HW	FZ/TR	5	**165740**	58
500	4,4	30	100	DP	HZFA	5	**762341**	63
500	4,4	32	120	HW	FZ/TR	5	**165743**	58
500	4,4	75	28	HW	WZ	20	**165328**	25
500	4,8	30	144	HW	WZ	10	**165454**	22
500	4,8	35	144	HW	WZ	10	**165455**	22
500	4,8	60	72	HW	TR/TR	15	**163393**	45
500	5,0	30	32	HW	FZ	20	**165107**	19
500	5,0	30	28	HW	WZ	20	**165205**	15
500	5,2	30	120	HW	WZ	10	**165453**	22
500	5,2	30	60	HW	WZ	15	**163314**	41, 53
500	5,2	30	60	HW	FZ/TR	15	**163439**	43, 53
500	5,2	60	60	HW	FZ/TR	15	**163440**	43
500	5,2	80	60	HW	WZ	15	**163315**	41
500	7,0	75	14	HW	WZ	20	**165327**	25
510	4,8	80	72	HW	FZ/TR	15	**163441**	43
520	4,4	30	44	HW	FZFA/FZFA	10	**165929**	67
520	4,4	30	72	HW	WZ	15	**163316**	41, 54
520	4,4	30	72	HW	FZ/TR	15	**163442**	43, 54
520	4,4	50	120	HW	FZ/TR	-5	**165849**	60
520	4,6	30	144	HW	WZ	10	**165456**	22
520	4,8	30	72	HW	TR/TR	15	**163399**	45
520	4,8	60	72	HW	FZ/TR	15	**163443**	43
520	4,8	70	72	HW	FZ/TR	15	**163444**	43
520	5,4	60	72	HW	WZ	20	**165332**	25
530	4,4	30	44	HW	FZFA/FZFA	10	**165930**	67
530	4,8	80	72	HW	FZ/TR	15	**163460**	43
550	4,0	30	132	HW	FZ/TR	-5	**165850**	60
550	4,0	30	160	HW	WZ/WZ/FZ	20	**161206**	30
550	4,0	32	132	HW	FZ/TR	-5	**165851**	60
550	4,0	32	96	HW	FZ/TR	5	**165744**	58
550	4,0	32	126	HW	FZ/TR	5	**165745**	58
550	4,4	30	120	HW	FZ/TR	5	**165746**	58
550	4,4	30	110	DP	HZFA	5	**762342**	63
550	4,8	30	54	HW	WZ	20	**166082**	20
550	5,0	30	96	HW	WZ	10	**165457**	22
550	5,0	80	36	HW	WZ	25	**165206**	15
550	5,2	30	160	HW	WZ	10	**165458**	22
550	5,2	30	120	HW	WZ	10	**165459**	22
550	5,2	30	60	HW	WZ	15	**163317**	41
550	5,2	80	60	HW	WZ	15	**163318**	41
555	5,2	55	54	HW	WZ	20	**165325**	25
570	4,8	60	60	HW	FZ/TR	22	**163445**	43
570	5,0	40	48	HW	FZFA/FZFA	10	**165931**	67
600	3,8	30	36	HW	WZ	20	**166610**	77
600	4,6	30	140	HW	FZ/TR	5	**165747**	58

D mm	SB mm	BO mm	Z	QAL	ZF	SW °	**ID**	Page
600	4,8	30	120	DP	HZFA	5	**762343**	63
600	4,8	30	60	HW	WZ	20	**166083**	20
600	5,0	32	132	HW	FZ/TR	5	**165748**	58
600	5,2	30	138	HW	FZ/TR	-5	**165852**	60
600	5,4	30	172	HW	WZ	10	**165461**	22
600	5,4	80	72	HW	WZ	20	**165333**	25
600	5,4	80	42	HW	WZ	25	**165207**	15
600	5,8	30	108	HW	WZ	10	**165460**	22
600	5,8	60	60	HW	FZ/TR	22	**163446**	43, 52
600	5,8	60	72	HW	FZ/TR	22	**163447**	43, 52
600	6,0	30	48	HW	WZ	15	**057570**	25
600	7,0	75	16	HW	WZ	20	**165329**	25
620	5,5	40	36	HW	FZFA/FZFA	10	**165932**	67
620	5,5	40	60	HW	FZ/TR	10	**165933**	67
630	5,4	30	180	HW	WZ	10	**165462**	22
640	5,4	30	36	HW	WZ	20	**165330**	25
650	5,0	30	144	HW	FZ/TR	5	**165749**	58
670	5,8	60	42	HW	FZ/TR	22	**163448**	43
680	5,5	40	42	HW	FZFA/FZFA	10	**165934**	67
680	6,2	40	60	HW	FZ/TR	22	**163449**	43, 54
700	4,2	30	42	HW	WZ	20	**166611**	77
700	5,5	30	200	HW	WZ	10	**165463**	22
700	6,0	30	72	HW	WZ	15	**165334**	25
700	6,2	80	60	HW	FZ/TR	22	**163450**	43
720	6,5	40	60	HW	FZ/TR	22	**163451**	43, 53-54
730	6,2	60	60	HW	FZ/TR	22	**163452**	43
750	6,0	30	72	HW	WZ	15	**165335**	25
750	7,0	80	70	HW	FZ/TR	22	**163453**	43
800	6,0	30	72	HW	WZ	15	**165336**	25
850	8,0	30	60	HW	WZ	20	**165331**	25

Application

For splitting or edging timber, for cutting lamellae on horizontal and vertical spindles.

Workpiece material

Softwood and hardwood, wet, frozen, dry or long fibre materials.

Machine

Edging, single blade, multi blade sawblades as well as sawblades with either one or two spindles. Circular saw benches or moulders.

Tooth shape

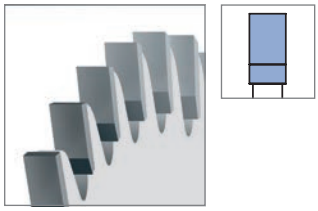

FZ (square teeth):
For multi-purpose application – particularly suitable for wet and dry wood.

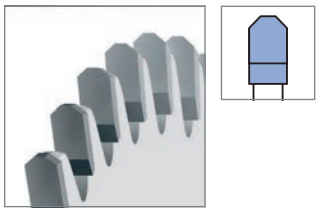

TR (trapezoidal teeth):
Recommended for cutting dry wood with minimum marking.

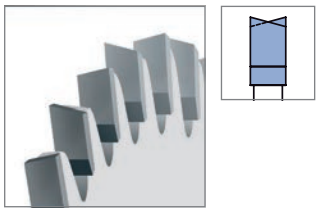

WZ (alternative top bevel teeth):
Ideal for long-fibred wood.
Higher quality on the exit surface.

Thin kerf sawblades

Application area

- Sawmill industry (laminating strips, lumber etc.).
- Solid board production (lamellos and core materials for multiple layer panels etc.).
- Parquet flooring industry (for core and surface materials, lamellos).
- Moulding products (mouldings, lippings, rulers etc.).
- Sport industry (skis, table tennis rackets etc.).

Cutting height diagram

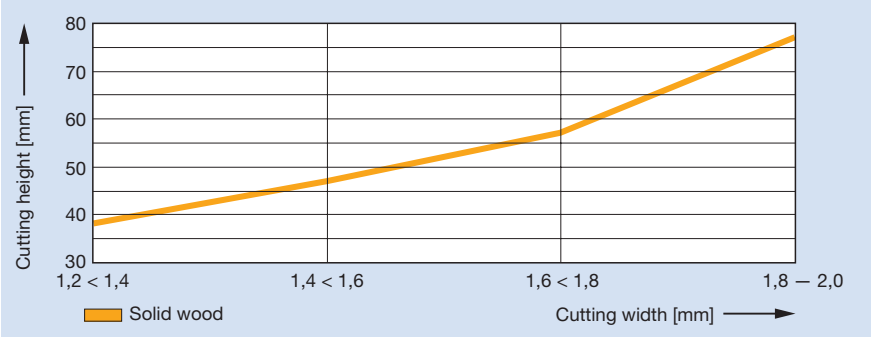

Thin kerf circular sawblades –
Cutting height depends on the sawblade cutting width SB.

Technical notes

Recommendations:
- Mount thin kerf sawblades on hydro sleeves.
- Check the sawblade clamping flange diameter.
- Check the cutting height and the tooth progression (feed rate).
- Resharpen and clean resin residues regularly.

Advantages

- Environmentally friendly use of resources.
- Reduced chips and dust.
- Optimised timber usage.
- More strips from workpiece with standard cuts.

Machine types

Single or multi spindle multi blade machines without automatic feed

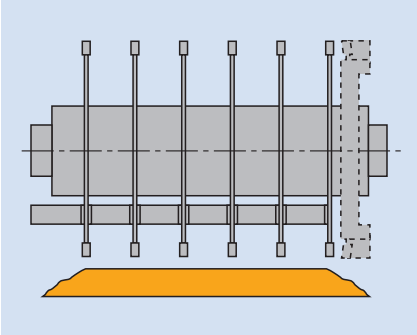

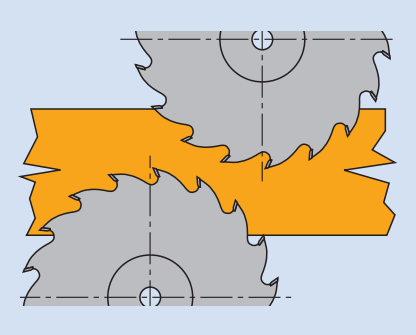

To avoid bending the sawblade, we recommend using wide sawblades or hoggers on the motorside. Riving knives are recommended when cutting thin lamella; a split machine table is necessary.

Multi spindle machines with automatic feed (for horizontal and vertical cutting)

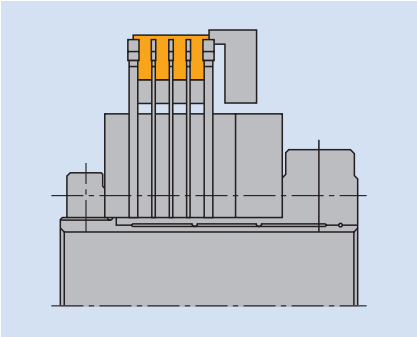

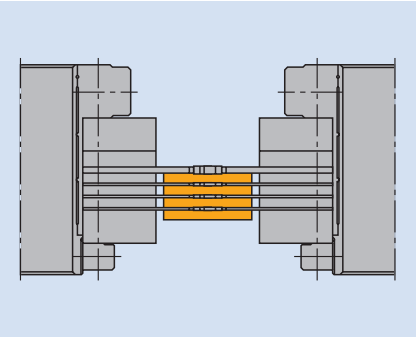

The saw spindle should have high precision bearings for accuracy.

Precise and stable feeding devices needed for bent, curved or twisted materials.
- Accurate adjustment of spindle and guide needed when sawing vertically (top and bottom side spindles).

- For horizontal cutting, the thickness of riving knives depends on the cutting width of the sawblades. The riving knives must be aligned 100% horizontal.

Position of double keyways for spiral arrangement of circular sawblades

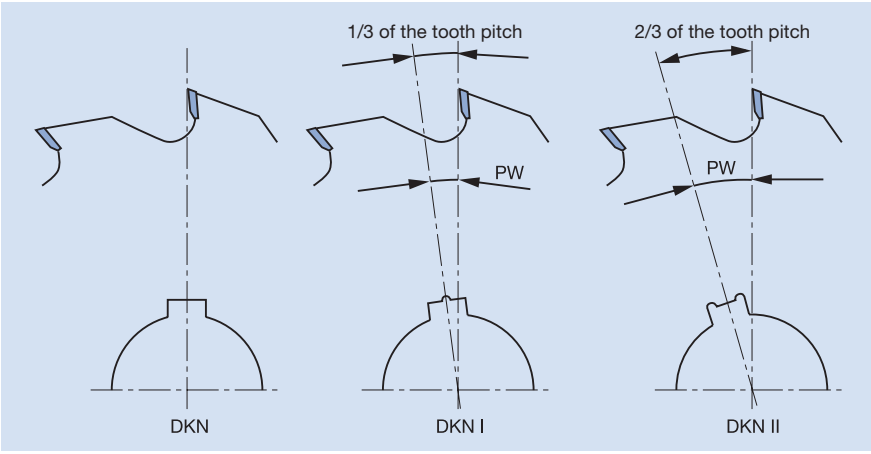









HW

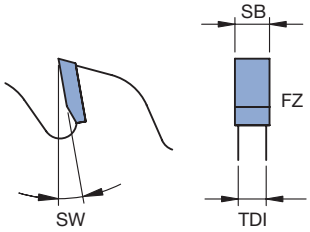

Premium lamella cut - middle cut with extremely reduced cutting width

Application:
For cutting strips and slats along grain on horizontal and vertical spindles.

Machine:
Moulders with/without forced guidance of workpieces. Application on single, double, horizontal or vertical spindles.

Workpiece material:
Softwood and hardwood, dry up to 10 % wood moisture content, quality category 0 to 1.

Technical information:
Noise-reduced and low vibration design due to irregular tooth pitch or odd number of teeth. Cutting width reduction for high wood savings and efficient energy utilisation. Continuous tool body without recess for max. cutting height. Different number of teeth for optimal tooth feeds with different feed speed. Higher cutting performance and less resinification due to special coating of the tool body. Use on hydro sleeves or clamping arbors is recommended, as is the use of high precision spacers to increase the performance of the saws. It is essential to pay attention to the setting of machines with riving knives.

Middle cut
WK 100 2 21

D mm	SB mm	TDI mm	BO mm	BO_{max} mm	NLA mm	FLD mm	Z	ZF	SW °	WSS	ID
180	1,3	0,8	60	70	3/10/75	100	32	FZ	20	■	**057418** ●
180	1,5	1,0	60	70	3/10/75	100	21	FZ	20	■	**057443** ●
180	1,8	1,2	60	70	3/10/75	100	21	FZ	20	■	**057444** ●
180	1,8	1,3	60	70	3/10/75	100	32	FZ	20	■	**057412** ●
200	1,5	1,0	60	80	3/10/75	120	21	FZ	20	■	**057445** ●
200	1,5	1,0	60	80	3/10/75	120	36	FZ	20	■	**057421** ●
200	1,8	1,2	60	80	3/10/75	120	21	FZ	20	■	**057446** ●
220	1,2	0,9	60	80	3/10/75	120	27	FZ	20	■	**057475** ●
220	1,2	0,9	65	80	3/11/80	120	24	FZ	20	■	**057474** ●
220	1,3	0,9	60	80	3/10/75	120	24	FZ	25	■	**057476** ●
220	1,3	0,9	60	80	3/10/75	120	32	FZ	25	■	**057478** ●
220	1,3	0,9	65	80	3/11/80	120	24	FZ	25	■	**057477** ●
220	1,3	0,9	65	80	3/11/80	120	32	FZ	25	■	**057479** ●
220	1,4	1,0	60	80	3/10/75	120	24	FZ	25	■	**057480** ●
220	1,4	1,0	60	80	3/10/75	120	32	FZ	20	■	**057464** ●
220	1,4	1,0	65	80	3/11/80	120	24	FZ	25	■	**057481** ●
220	1,4	1,0	65	80	3/11/80	120	32	FZ	20	■	**057465** ●
225	1,5	1,0	60	110	3/10/75	120	25	FZ	20	■	**057447** ●
225	1,6	1,2	60	110	3/10/75	130	32	FZ	25	■	**057482** ●
225	1,8	1,2	60	110	3/10/75	120	25	FZ	20	■	**057448** ●
225	2,0	1,4	40	110	3/10/75	120	40	FZ	20	■	**163600** ●
225	2,0	1,4	60	110	3/10/75	120	25	FZ	20	■	**057449** ●
250	1,7	1,2	60	120	3/10/75	140	25	FZ	20	■	**057450** ●
250	1,7	1,2	60	120	3/10/75	140	36	FZ	20	■	**057433** ●
250	2,0	1,4	60	120	3/10/75	140	25	FZ	20	■	**057451** ●
250	2,0	1,4	60	120	3/10/75	140	36	FZ	20	■	**057434** ●

● available ex stock
□ available at short notice
Instruction manual visit www.leitz.org









HW

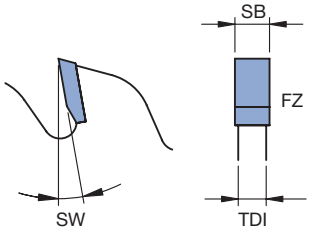

Lamella cut - shoulder cut

Application:
For cutting along grain - shoulder cuts in combination with middle cut sawblades.

Machine:
Moulders with/without forced guidance of workpieces. Application on single, double, horizontal or vertical spindles.

Workpiece material:
Softwood and hardwood, dry up to 10 % wood moisture content, quality category 0 to 1.

Technical information:
Suitable for utilisation as a set in combination with thin kerf sawblades for middle cuts. Solid design to increase the rigidity of the set. Higher cutting performance and less resin formation by special coated toolbody.

Shoulder cuts
WK 100 2 21

D mm	SB mm	TDI mm	BO mm	NLA mm	DKN mm	FLD mm	Z	ZF	SW °	WSS	ID
200	5,0	4,0	30	3/10/75		120	24	FZ	20	■	**165250** ●
220	5,0	4,0	30	3/10/75		120	24	FZ	20	■	**165251** ●
225	5,0	4,0	30	3/10/75		120	24	FZ	20	■	**165252** ●
225	5,0	4,0	60	3/10/75		120	40	FZ	20	■	**165256** ●
250	5,0	4,0	30	3/10/75		140	24	FZ	20	■	**165253** ●
250	5,0	4,0	30	3/10/75		140	36	FZ	20	■	**165254** ●
250	8,0	6,0	80	4/7/95 2/13/100	13/89	100	24	FZ	15	■	**165257** ●

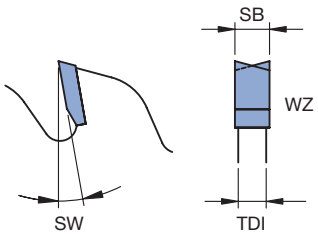

Technical information:
Suitable for utilisation as a set in combination with thin kerf sawblades for middle cuts. Special cutting edge geometry for cut pitch and lower cutting forces. For cutting pressure reduction and reduction of burn marks even at lower feed rates. Higher cutting performance and less resin formation by special coated toolbody.

Shoulder cuts - reduced number of teeth
WK 150 2, WK 150 2 21

D mm	SB mm	TDI mm	BO mm	NLA mm	FLD mm	Z	ZF	SW °	WSS	ID
180	3,8	3,0	60	3/10/75 3/11/80	100	24	WZ	20	■	**165255** ●
200	3,8	3,0	60	3/10/75 3/11/80	100	24	WZ	20	■	**165259** ●
220	3,8	3,0	60	3/10/75 3/11/80	120	24	WZ	20	■	**165260** ●
220	3,8	3,0	65	3/10/75 3/11/80	120	24	WZ	20	■	**165261** ●
220	3,8	3,0	60	3/10/75 3/11/80	120	24	WZ	20	■	**165262** ●
225	3,8	3,0	60	3/10/75 3/11/80	120	24	WZ	20	■	**165263** ●
250	3,8	3,0	60	3/10/75 3/11/80	120	24	WZ	20	■	**165264** ●







HW

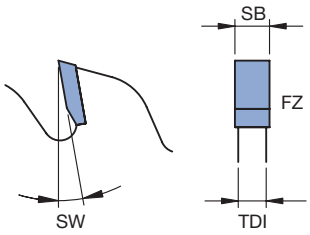

Lamella cut with internal and external wiper teeth

Application:
For cutting along grain - shoulder and trimming cuts.

Machine:
Edging, single blade, multi blade saws as well as saws with one or two spindles.

Workpiece material:
Softwood and hardwood wet, frozen, dry. Long fibre materials (poplar, balsa etc.)

Technical information:
With two internal and external (from D 280 mm) raker blades. Solid design especially for edge cuts. Large lateral tooth protrusions. For universal use in dry, wet and frozen soft and hard woods. Higher cutting performance and less resinification due to special coating of the tool body.

Square and shoulder cut
WK 150 2

D mm	SB mm	TDI mm	BO mm	BO_{max} mm	NLA mm	DKN mm	FLD_{max} mm	Z	ZF	SW °	WSS	ID
250	4,4	2,8	30	80	KNL		130	18	FZ	25	■	**165000** ●
250	4,4	2,8	80		6/5,5/91 4/6,6/95 2/13/100	19/89 13/89	130	18	FZ	25	■	**165001** ●
300	5,0	3,2	30	80	KNL		110	20	FZ	25	■	**165002** ●
350	5,0	3,2	30	100	KNL		130	24	FZ	25	■	**165003** ●
350	5,0	3,2	80	100	6/5,5/91 4/6,6/95 2/13/100	19/89 13/89	130	24	FZ	25	■	**165004** ●
400	5,0	3,2	30	120	KNL		150	28	FZ	25	■	**165005** ●
400	5,0	3,2	80	120	6/5,5/91 4/6,6/95 2/13/100	19/89 13/89	150	28	FZ	25	■	**165006** ●
450	5,0	3,2	30	120	KNL		160	28	FZ	25	■	**165007** ●

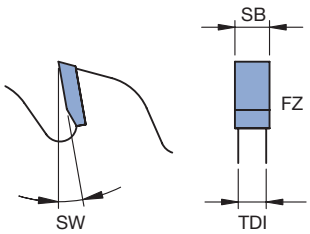

Application:
For cutting along grain - middle cuts.

Middle cut
WK 100 2 43

D mm	SB mm	TDI mm	BO mm	BO_{max} mm	NLA mm	DKN mm	FLD_{max} mm	Z	ZF	SW °	WSS	ID
250	3,5	2,2	30	80	KNL		130	18	FZ	25	■	**165008** ●
250	3,5	2,2	80		6/5,5/91 4/6,6/95 2/13/100	19/89 13/89	130	18	FZ	25	■	**165009** ●
300	3,5	2,2	30	80	KNL		110	20	FZ	25	■	**165010** ●
300	3,5	2,2	70			21x83	110	20	FZ	25	■	**165011** ●
300	3,5	2,2	80			23x90 13x89	110	20	FZ	25	■	**165012** ●
350	4,0	2,8	30	100	KNL		130	24	FZ	25	■	**165013** ●
350	4,0	2,8	80	100	6/5,5/91 4/6,6/95 2/13/100	19/89 13/89	130	24	FZ	25	■	**165014** ●
400	4,0	2,8	30	120	KNL		150	28	FZ	25	■	**165015** ●
400	4,0	2,8	80	120	6/5,5/91 4/6,6/95 2/13/100	19/89 13/89	150	28	FZ	25	■	**165016** ●
450	4,4	3,0	30	120	KNL		160	28	FZ	25	■	**165017** ●

● available ex stock
□ available at short notice
Instruction manual visit www.leitz.org







HW

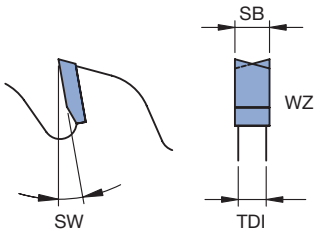

Lamella cut with internal and external wiper teeth

Application:
For cutting along grain - middle cuts.

Machine:
Edging, single blade, multi blade saws as well as saws with one or two spindles.

Workpiece material:
Softwood and hardwood, dry up to 15% wood moisture content. Long fibre materials (poplar, balsa etc.).

Technical information:
With two external and two or four internal wiper teeth. Tooth shape WZ best suited for cuts in long-fibred woods such as poplar. Lower power consumption due to tooth shape WZ. Higher cutting performance and less resinification due to special coating of the tool body.

Middle cut
WK 150 2

D mm	SB mm	TDI mm	BO mm	BO_{max} mm	NLA mm	DKN mm	Z	ZF	SW °	WSS	ID
250	3,2	2,2	70			20,6/83	20	WZ	20	■	**165200** ●
300	3,2	2,2	70	80		20,6/83	24	WZ	20	■	**165201** ●
320	3,2	2,2	70	80		20,6/83	28	WZ	20	■	**165202** ●
350	3,5	2,5	70	100		20,6/83	28	WZ	20	■	**165203** ●
400	4,0	2,8	70	100		20,6/83	24	WZ	20	■	**165204** ●
500	5,0	3,5	30	100	KNL		28	WZ	20	■	**165205** ●
550	5,0	3,2	80		2/13/100		36	WZ	25	■	**165206** ●
600	5,4	3,8	80		2/13/100		42	WZ	25	■	**165207** ●







HW

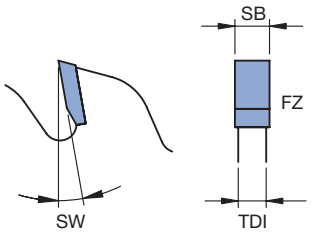

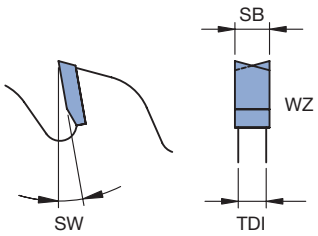

Lamella cut with external wiper teeth *Premium*

Application:
For cutting of thin slats on horizontal spindles.

Machine:
Edging, single blade, multi blade saws as well as saws or moulders with one or two spindles.

Workpiece material:
Softwood, dry up to 10% wood moisture content.

Technical information:
With two external raker blades giving better chip ejection. Higher cutting performance and less resinification due to special coating of the tool body. Special limitor shape for protection of the teeth when used in woods with loose knots and in cracked woods.

Middle cut
WK 100 2, WK 150 2

D mm	SB mm	TDI mm	BO mm	DKN mm	Z	ZF	SW °	WSS	ID
200	2,0	1,4	30		24	FZ	20	■	**163575** ●
250	2,0	1,4	80	19/89	36	WZ	15	■	**163576** ●
250	2,4	1,6	80	19/89	32	WZ	15	■	**163577** ●
300	2,8	1,8	80	19/89	28	WZ	15	■	**163578** ●

● available ex stock
□ available at short notice
Instruction manual visit www.leitz.org





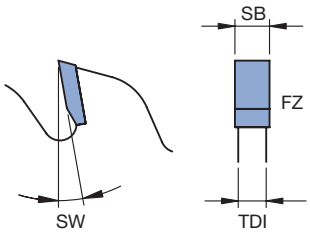

Lamella cut with internal wiper teeth *Premium* - reduced cutting width

Application:
For cutting of thin slats on horizontal spindles.

Machine:
Edging, single blade, multi blade saws as well as saws or moulders with one or two spindles.

Workpiece material:
Softwood and hardwood, dry up to 10% wood moisture content.

Technical information:
With internal raker blades for better dimensional stability. Efficient energy and wood utilisation due to reduced cutting widths. Special limitor shape (up to D 250 mm) to protect the teeth when used in wood with loose knots and cracked wood. From D 300 mm large gullet areas for better chip ejection. Higher cutting performance and less resinification due to special coating of the tool body.

Middle cut
WK 100 4 , WK 100 2

D mm	SB mm	TDI mm	BO mm	BO_{max} mm	DKN mm	Z	ZF	SW °	WSS	ID
200	2,4	1,6	30			24	FZ	25	■	**163560** ●
200	2,4	1,6	40	60		24	FZ	20	■	**163550** ●
220	2,4	1,6	30			24	FZ	25	■	**163559** ●
220	2,4	1,6	40	80		24	FZ	20	■	**163551** ●
250	2,4	1,6	30			24	FZ	20	■	**163558** ●
250	2,4	1,6	40	90		24	FZ	20	■	**163552** ●
250	2,4	1,6	70		21/83	24	FZ	20	■	**163553** ●
250	2,4	1,6	80		19x89 13x89	24	FZ	20	■	**163554** ●
300	2,8	1,8	30	100		30	FZ	25	■	**163555** ●
300	2,8	1,8	80		19x89 13x89	30	FZ	25	■	**163556** ●
350	2,8	1,8	30	110		30	FZ	25	■	**163557** ●





Lamella cut with internal and external wiper teeth *Premium* - reduced cutting width

Application:
For cutting of thin slats on vertical spindles.

Machine:
Edging, single blade, multi blade saws as well as saws or moulders with one or two spindles.

Workpiece material:
Softwood and hardwood, dry up to 10% wood moisture content.

Technical information:
With two external and internal raker blades for increased stability also for larger cutting depths. Efficient energy and wood utilization through reduced cutting widths. Higher cutting performance and less resinification through special coating of the tool body.

Middle cut
WK 100 2

D mm	SB mm	TDI mm	BO mm	BO_{max} mm	NLA mm	FLD_{max} mm	Z	ZF	SW °	WSS	ID
250	2,4	1,6	60	80	3/10/75	100	24	FZ	20	■	**163700** ●
250	2,4	1,6	60	80	3/10/75	120	40	FZ	20	■	**163701** ●
270	2,4	1,6	60	80	3/10/75	120	28	FZ	20	■	**163702** ●







HW

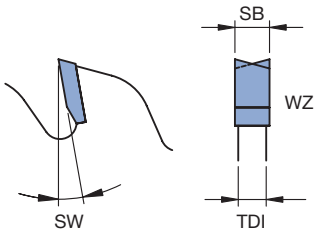

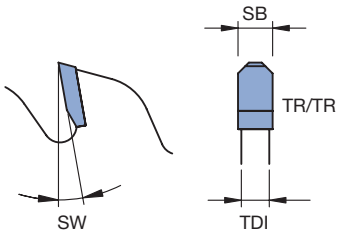

Lamella cut for glueable cuts

Application:
For cutting along grain - glueable middle and lamellae cuts on horizontal spindles.

Machine:
Single blade, multi blade saws as well as saws and moulders with one or two spindles.

Workpiece material:
Softwood and hardwood, dry up to 10% wood moisture content.

Technical information:
Special tooth geometry for gluable cutting areas. Noise-reduced design due to irregular tooth pitch. Continuous tool body without recess. Increased cutting performance and less resinification through special coating of the tool body.

Middle cut
WK 100 2, WK 150 2, WK 152 2, WK 158 2

Machine	D	SB	TDI	BO	BO_{max}	NLA	DKN	Z	ZF	SW	WSS	ID
	mm	mm	mm	mm	mm	mm	mm			°		
	180	2,2	1,4	30	60	3/10/75		18	FZ	15	■	**165300** ●
	180	2,4	1,6	30	60	3/10/75		24	FZ	15	■	**165301** ●
	200	2,4	1,6	30	60	3/10/75		18	FZ	15	■	**165302** ●
	200	2,4	1,6	30	60	3/10/75		24	FZ	15	■	**165303** ●
	225	2,4	1,6	30	60	3/10/75		24	FZ	15	■	**165304** ●
	225	2,8	2,0	30	60	3/10/75		24	FZ	15	■	**165305** ●
	240	2,8	2,0	40	60	3/10/75		24	FZ	15	■	**165306** ●
Raimann	250	2,4	1,6	80		6/5,5/91 4/6,6/95 2/13/100	19/89 13/89	40	WZ	15	■	**165309** ●
	250	2,8	2,0	30	100	3/10/75		24	FZ	15	■	**165307** ●
	250	2,8	2,0	70	100		21/80	24	FZ	15	■	**165308** ●
Raimann	300	2,8	1,8	80		6/5,5/91 4/6,6/95 2/13/100	19/89 13/89	28	WZFA	15	■	**165310** ●
Raimann	300	2,8	2,0	80		6/5,5/91 4/6,6/95 2/13/100	19/89 13/89	48	TR/TR	15	■	**165311** ●
Raimann	300	3,4	2,2	80		6/5,5/91 4/6,6/95 2/13/100	19/89 13/89	28	FZ	15	■	**165312** ●
Raimann	300	4,0	2,8	80		6/5,5/91 4/6,6/95 2/13/100	19/89 13/89	28	TR/TR	15	■	**165313** ●
Raimann	300	4,0	2,8	80		6/5,5/91 4/6,6/95 2/13/100	19/89 13/89	48	TR/TR	15	■	**165314** ●

● available ex stock
□ available at short notice
Instruction manual visit www.leitz.org



Lamella cut

Application:
For cutting along grain - shoulder and trimming cuts.

Machine:
Edging, single blade, multi blade saws as well as saws with one or two spindles.

Workpiece material:
Softwood and hardwood wet and dry.

Technical information:
Large gullet area and large lateral tooth protrusion. Solid desing particularly for edge cuts. For universal use in dry and wet soft and hard woods. Design without raker blades. Partially suitable for larger cutting depths and the use in frozen woods.





HW

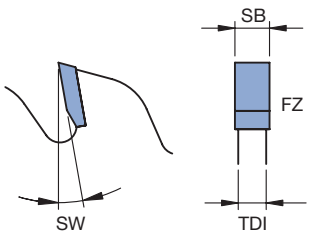

Shoulder and square cut
WK 100 2

D	SB	TDI	BO	NLA	Z	ZF	SW	WSS	ID
mm	mm	mm	mm	mm			°		
250	4,0	2,6	30	KNL	18	FZ	20	■	**165101** ●
300	4,0	2,6	30	KNL	24	FZ	20	■	**165102** ●
350	4,4	3,0	30	KNL	24	FZ	20	■	**165104** ●
400	5,0	3,2	30	KNL	28	FZ	20	■	**165105** ●
450	5,0	3,2	30	KNL	28	FZ	20	■	**165106** ●
500	5,0	3,2	30	KNL	32	FZ	20	■	**165107** ●

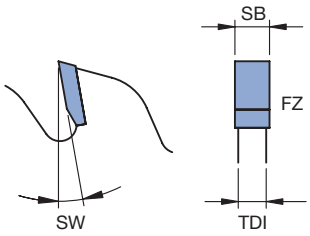

Middle cut
WK 100 2

D	SB	TDI	BO	NLA	Z	ZF	SW	WSS	ID
mm	mm	mm	mm	mm			°		
200	3,2	2,2	30	KNL	18	FZ	25	■	**165108** ●
210	3,2	2,2	30	KNL	18	FZ	20	■	**165109** ●
250	3,2	2,2	30	KNL	18	FZ	20	■	**165110** ●
300	3,2	2,2	30	KNL	24	FZ	20	■	**165111** ●
350	3,2	2,2	30	KNL	24	FZ	20	■	**165113** ●
400	4,0	2,8	30	KNL	28	FZ	20	■	**165114** ●
450	4,0	2,8	30	KNL	28	FZ	20	■	**165115** ●
500	4,0	2,8	30	KNL	32	FZ	20	■	**165116** ●





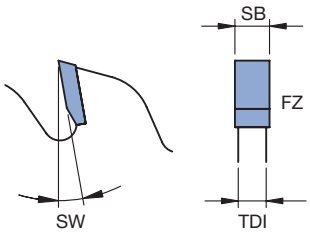

Sizing solid wood along grain

Application:
For cutting along grain - sizing wood.

Machine:
Edging, single blade, multi blade saws as well as saws with one or two spindles.

Workpiece material:
Softwood and hardwood, dry up to 15% wood moisture content.

Technical information:
Design with chip thickness limitation for limited chip removal per tooth and reduced feed speeds.

Circular sawblade FZ with thickness limitation
WK 100 2

D	SB	TDI	BO	NLA	Z	ZF	SW	WSS	ID
mm	mm	mm	mm	mm			°		
250	3,2	2,2	30	KNL	18	FZ	20	■	**166050** ●
300	3,5	2,4	30	KNL	14	FZ	20	■	**166051** ●
350	3,5	2,4	30	KNL	16	FZ	20	■	**166052** ●
400	4,0	2,8	30	KNL	18	FZ	20	■	**166053** ●
450	4,0	2,8	30	KNL	20	FZ	20	■	**166054** ●
500	4,0	2,8	30	KNL	24	FZ	20	■	**166055** ●





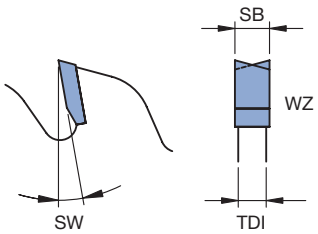

Universal sizing

Application:
For multi-purpose application in solid wood.

Machine:
Trimming and cross cutting saws.

Workpiece material:
Softwood and hardwood wet and dry.

Technical information:
Design with chip thickness limitation for limited chip removal per tooth and reduced feed speeds. Tooth shape WZ for cuts in long-fibred woods such as poplar and for cuts in wet woods. Lower power consumption due to tooth shape WZ. Also suitable for cuts across the grain.

Circular sawblade WZ with thickness limitation
WK 150 2

D	SB	TDI	BO	NLA	Z	ZF	SW	WSS	ID
mm	mm	mm	mm	mm			°		
250	3,2	2,2	30	KNL	24	WZ	20	■	**166076** ●
300	3,2	2,2	30	KNL	28	WZ	20	■	**166077** ●
350	3,2	2,2	30	KNL	32	WZ	20	■	**166078** ●
400	4,0	2,8	30	KNL	36	WZ	20	■	**166079** ●
450	4,0	2,8	30	KNL	42	WZ	20	■	**166080** ●
500	4,0	2,8	30	KNL	48	WZ	20	■	**166081** ●
550	4,8	3,5	30	KNL	54	WZ	20	■	**166082** ●
600	4,8	3,5	30	KNL	60	WZ	20	■	**166083** ●

● available ex stock
□ available at short notice
Instruction manual visit www.leitz.org

Application area	For trim, cross, mitre and sizing cuts.
Workpiece material	Solid wood with or without coating, plywood, glulam, solid surface materials.
Machine	Combined table, mitre, radial, underfloor and optimising saws.

Application

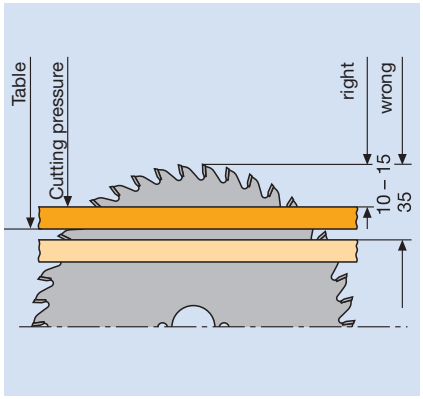

The cutting force of sawblades with a positive cutting angle and the spindle below the workpiece or for sawblades with a negative cutting angle and the spindle above the workpiece. Press the material onto the table.

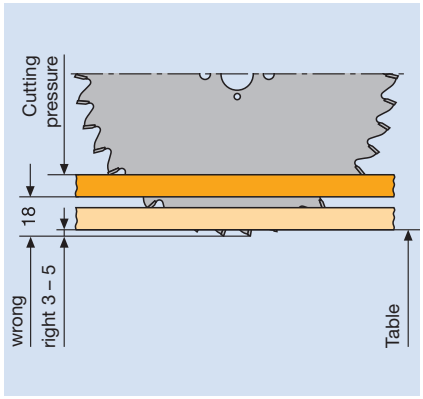

On radial saws, the use of sawblades with a negative cutting angle cutting against the feed is obligatory (see EN 1870-17). The negative cutting angle presses the material onto the table.

Tooth shape

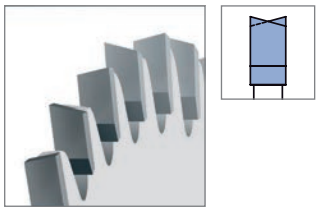

WZ (alternative top bevel teeth): Multi purpose tooth shape, economical to purchase and maintain – suitable for solid wood and wood derived materials.







HW

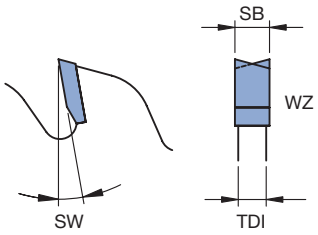

Trimming at high feed rates

Application:
For trimming and cross cutting with cycle times of 0.3 - 1.0 sec.

Machine:
Cross, trimming and optimising saws.

Workpiece material:
Solid wood wet and dry across grain, solid wood profiles across grain.

Technical information:
For fast cross-cutting, sizing and optimizing machines. Large lateral tooth clearance and a high number of teeth. Stable corner angle of 20° for tear-free cutting results and long tool life.

Trimming at high feed rates
WK 150 2

Machine	D mm	SB mm	TDI mm	BO mm	NLA mm	Z	ZF	SW °	WSS	ID
Dimter, System TM	400	3,5	2,8	30	2/10/60 2/15/63 2/10/150 2/10/198	120	WZ	10	■	**165450** ●
Dimter, System TM	400	3,5	2,8	30	2/10/60 2/15/63 2/10/150 2/10/198	140	WZ	10	■	**165464** ●
Dimter, System TM	450	3,5	2,8	30	2/10/60 2/15/63 2/10/150 2/10/198	158	WZ	10	■	**165465** ●
Dimter	450	3,9	3,2	30	2/15/63	136	WZ	10	■	**165466** ●
Dimter, System TM	450	4,8	3,5	30	2/10/60 2/15/63 2/10/150 2/10/198	138	WZ	10	■	**165451** ●
Dimter	450	5,0	3,2	30	2/10/60 2/15/63	108	WZ	10	■	**165452** ●
Dimter, System TM	500	4,8	3,5	30	2/10/60 2/15/63 2/10/150 2/10/198	144	WZ	10	■	**165454** ●
Dimter	500	4,8	3,5	35	2/10/60 2/15/63	144	WZ	10	■	**165455** □
Dimter	500	5,2	3,2	30	2/10/60 2/15/63	120	WZ	10	■	**165453** ●
Dimter	520	4,6	3,4	30	2/10/60 2/15/63	144	WZ	10	■	**165456** ●
Dimter	550	5,0	3,2	30	2/10/60 2/15/63	96	WZ	10	■	**165457** ●
Dimter	550	5,2	3,2	30	2/10/60 2/15/63	120	WZ	10	■	**165459** ●
Dimter, System TM	550	5,2	3,2	30	2/10/60 2/15/63 2/10/150 2/10/198	160	WZ	10	■	**165458** ●
Dimter	600	5,4	4,0	30	2/10/60 2/15/63	172	WZ	10	■	**165461** ●
Dimter	600	5,8	4,0	30	2/10/60 2/15/63	108	WZ	10	■	**165460** ●
Dimter	630	5,4	4,0	30	2/10/60 2/15/63	180	WZ	10	■	**165462** ●
Dimter	700	5,5	4,0	30	2/15/63	200	WZ	10	■	**165463** ●

● available ex stock
□ available at short notice
Instruction manual visit www.leitz.org







HW

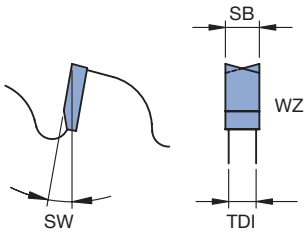

Trimming with negative cutting angle

Application:
For trimming and cross cutting - positioning of workpiece under the sawblade.

Machine:
Cross, trimming, mitre and radial saws as well as double mitre cutting saws.

Workpiece material:
Softwood and hardwood wet and dry, laminated veneer lumber (e.g. plywood, multiplex plywood).

Technical information:
Especially for machines with positioning of the saw shaft above the workpiece. Negative cutting angle for improved workpiece clamping.

Circular sawblade WZ with neg. cutting angle
WK 160 2

D	SB	TDI	BO	NLA	Z	ZF	SW	WSS	ID
mm	mm	mm	mm	mm			°		
300	3,2	2,4	30	KNL	60	WZ	-5	■	**165514** ●
300	3,2	2,4	30	KNL	96	WZ	-5	■	**165515** ●
305	3,2	2,4	30	KNL	60	WZ	-5	■	**165516** ●
350	3,2	2,4	30	KNL	36	WZ	-5	■	**165517** ●
350	3,2	2,4	30	KNL	60	WZ	-5	■	**165518** ●
350	3,5	2,8	30	KNL	108	WZ	-5	■	**165519** ●
355	3,2	2,4	30	KNL	72	WZ	-5	■	**165520** ●
400	3,8	2,8	30	KNL	42	WZ	-5	■	**165521** ●
400	3,8	2,8	30	KNL	60	WZ	-5	■	**165522** ●
400	3,8	2,8	30	KNL	120	WZ	-5	■	**165523** ●
420	3,5	2,8	40		48	WZ	-5	■	**165524** ●
450	3,8	2,8	30	KNL	48	WZ	-5	■	**165525** ●
500	4,4	3,2	30	KNL	54	WZ	-5	■	**165526** ●







HW

Low Noise

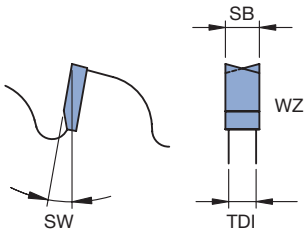

Trimming with negative cutting angle *Excellent*

Application:
For trimming and cross cutting - positioning of workpiece under the sawblade.

Machine:
Cross, trimming, mitre and radial saws as well as double mitre cutting saws.

Workpiece material:
Softwood and hardwood wet and dry, laminated veneer lumber (e.g. plywood, multiplex plywood).

Technical information:
Especially for machines with positioning of the saw shaft above the workpiece. Negative cutting angle for improved workpiece clamping. **Excellent** design. Vibration-damping composite construction of the tool body by means of steel foil. Extreme noise reduction even with increasing dulling of the tool.

Circular sawblade WZ with neg. cutting angle
WK 180 2

D mm	SB mm	TDI mm	BO mm	NLA mm	Z	ZF	SW °	Foil	WSS	ID
300	3,5	2,6	30	KNL	96	WZ	-5	left	■	**161330** ●
300	3,5	2,6	30	KNL	96	WZ	-5	right	■	**161331** ●
350	3,5	2,6	30	KNL	108	WZ	-5	left	■	**161332** ●
350	3,5	2,6	30	KNL	108	WZ	-5	right	■	**161333** ●
400	3,5	2,6	30	KNL	120	WZ	-5	left	■	**161334** ●
400	3,5	2,6	30	KNL	120	WZ	-5	right	■	**161335** ●

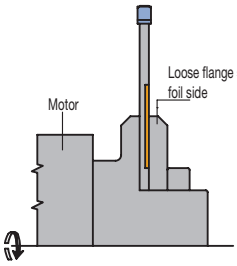

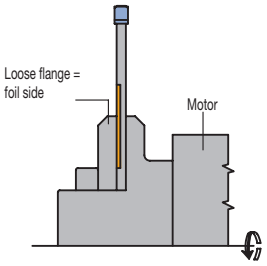

● available ex stock
□ available at short notice
Instruction manual visit www.leitz.org





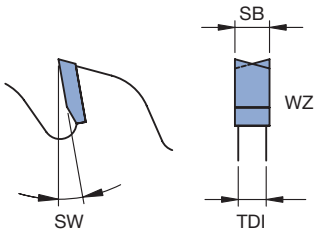

Trimming, crossing and mitre cuts

Application:
For cross cutting, trimming and angled cuts.

Machine:
Cross and trimming saws and CNC controlled joinery machines, cross cutting twin saws.

Workpiece material:
Solid wood beams wet and dry, cross-glued beams.

Technical information:
Tooth shape for universal use and with large lateral tooth clearance.

Circular sawblade WZ
WK 150 2

Machine	D mm	SB mm	TDI mm	BO mm	NLA mm	Z	ZF	SW °	WSS	ID
Weinmann	240	3,0	2,0	40	8/6/52	30	WZ	15	■	**165337** ●
Weinmann	370	3,5	2,5	30	KNL	108	WZ	10	■	**165338** ●
Routech	440	7,0	4,0	75	6/9/100 2/8,5/100	12+2+2	WZ	20	■	**165326** ●
Routech	500	4,4	3,2	75	2/8,5/100 6/10,6/100	28+2+2+2	WZ	20	■	**165328** ●
Routech	500	7,0	4,0	75	6/9/100 2/8,5/100	14+2+2+2	WZ	20	■	**165327** ●
Essetre	520	5,4	3,5	60	8/6,5/100	72	WZ	20	■	**165332** ●
Weinmann	555	5,2	3,6/6	55	6/7/75	54+2+2	WZ	20	■	**165325** ●
Essetre	600	5,4	3,5	80	8/9,5/120	72	WZ	20	■	**165333** ●
	600	6,0	4,0	30	2/14/400	48	WZ	15	■	**057570** ●
Routech	600	7,0	4,0	75	6/9/125 2/8,5/125	16+2+2+2	WZ	20	■	**165329** ●
Uniteam	640	5,4	3,6	30	8/6,5/160 8/6,5/130 4/10,5/90	36+2+2	WZ	20	■	**165330** ●
	700	6,0	4,4	30		72	WZ	15	■	**165334** ●
	750	6,0	4,4	30		72	WZ	15	■	**165335** ●
	800	6,0	4,4	30		72	WZ	15	■	**165336** ●
Uniteam	850	8,0	6,0	30	8/6,5/160 8/6,5/130 4/10,5/90	60+2+2+2	WZ	20	■	**165331** ●

Working process	For cross cutting and sizing; grooving and cutting also possible if safety regulations are followed.
Workpiece materials	Solid wood, wood derived materials, synthetic materials and light metals.
Machines	Table saws, sizing machines with/without scoring saw, vertical panel sizing saws and twin sizing saws.
Application	Suitable for cutting from below against the feed. On vertical panel sizing machines and twin saw dimension saws cutting from either below or above against the feed.

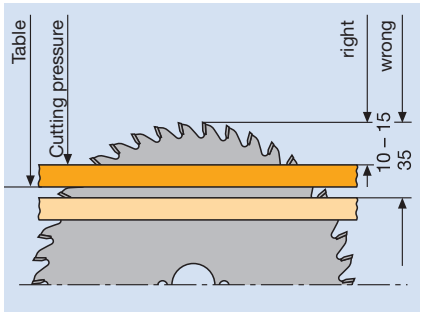

The positive cutting angle presses the material onto the table for sawblades with a positive cutting angle and the spindle below the workpiece.

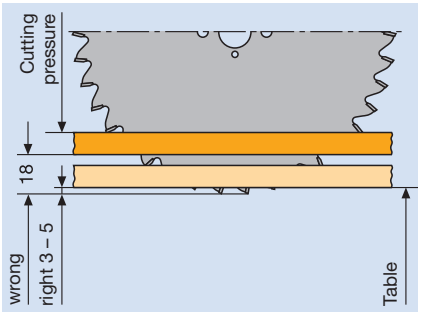

The negative cutting angle presses the material onto the table for sawblades with a negative cutting angle and the spindle above the workpiece.

On radial saw machines, sawblades must be used (see EN1870-17) with a negative cutting angle against the feed.

Tooth shape

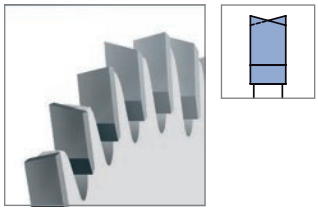

WZ (alternative top bevel teeth): Multi-purpose tooth shape, economical to purchase and maintain. Ideal for chipboard, veneered chipboard, solid wood, block board, plywood.

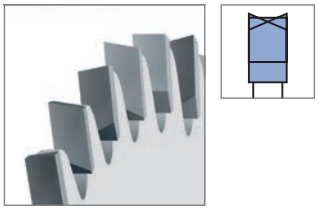

WZ/WZ/FZ (alternative/square teeth): Tooth shape for solid wood, glulam and coated or veneered wood derived materials; tear-free cutting edges and high cut quality. Combinations of tooth forms (WZre, WZli, WZre, WZli, FZ).

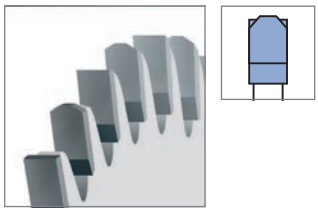

FZ/TR (square/trapezoidal teeth): Tooth shape for plastic and foil coated wood derived materials.
TR/TR (trapezoidal/trapezoidal teeth): Best tooth shape for cutting hard and abrasive coatings – can be altered from the existing FZ/TR shape.

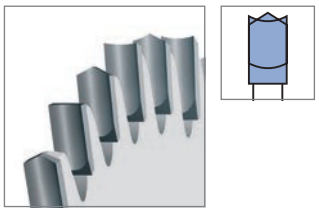

HZ/DZ (hollow face/inverted V teeth): Tooth shape for high cutting quality on plastic coated materials, with high upper and lower edge quality on machines without a scoring saw.



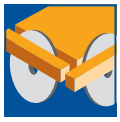



HW

Low Noise

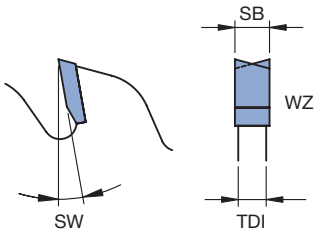

Sizing *Premium*

Application:
For sizing and cross cutting with/without scoring.

Machine:
Table and sizing saws.

Workpiece material:
Solid wood across grain, chipboard and fibre materials, laminated veneer lumber (e.g. plywood, multiplex plywood).

Technical information:
Premium design with vibration-damping laser ornaments (from D 200 mm). Marked dimensions with irregular tooth pitch (UT) for noise reduction and improved running behaviour.

Sizing sawblade WZ
WK 170 2

D mm	SB mm	TDI mm	BO mm	NLA mm	Z	ZF	Type	SW °	WSS	ID
150	3,2	2,2	30		48	WZ		10		**163100** ●
180	2,4	1,6	30		30	WZ	UT	10		**163101** ●
180	3,0	2,0	30		24	WZ	UT	10		**163102** ●
180	3,2	2,2	30		58	WZ		10		**163103** ●
180	3,5	2,5	30		30	WZ	UT	10		**163104** ●
200	2,4	1,6	30	KNL	36	WZ	UT	10		**163105** ●
200	2,4	1,6	30	KNL	60	WZ		10		**163106** ●
200	3,0	2,0	30	KNL	24	WZ	UT	10		**163107** ●
200	3,0	2,0	30	KNL	48	WZ	UT	10		**163108** ●
200	3,0	2,0	30	KNL	60	WZ		10		**163109** ●
220	3,2	2,2	30	KNL	36	WZ	UT	10		**163110** ●
220	3,2	2,2	30	KNL	60	WZ		10		**163111** ●
250	2,4	1,6	30	KNL	40	WZ	UT	10		**163112** ●
250	2,4	1,6	30	KNL	80	WZ		10		**163113** ●
250	3,2	2,2	30	KNL	40	WZ	UT	10		**163114** ●
250	3,2	2,2	30	KNL	60	WZ	UT	10		**163115** ●
250	3,2	2,2	30	KNL	80	WZ		10		**163116** ●
300	2,4	1,6	30	KNL	48	WZ	UT	10		**163117** ●
300	2,4	1,6	30	KNL	96	WZ		10		**163118** ●
300	3,2	2,2	30	KNL	36	WZ	UT	10		**163119** ●
300	3,2	2,2	30	KNL	48	WZ	UT	10		**163120** ●
300	3,2	2,2	30	KNL	72	WZ	UT	10		**163121** ●
300	3,2	2,2	30	KNL	96	WZ		10		**163122** ●
350	3,5	2,5	30	KNL	32	WZ	UT	10		**163134** ●
350	3,5	2,5	30	KNL	54	WZ	UT	10		**163123** ●
350	3,5	2,5	30	KNL	72	WZ	UT	10		**163124** ●
350	3,5	2,5	30	KNL	84	WZ	UT	10		**163125** ●
350	3,5	2,5	30	KNL	108	WZ		10		**163126** ●
400	3,5	2,5	30	KNL	48	WZ	UT	10		**163127** ●
400	3,5	2,5	30	KNL	60	WZ	UT	10		**163128** ●
400	3,5	2,5	30	KNL	84	WZ	UT	10		**163129** ●
400	3,5	2,5	30	KNL	96	WZ	UT	10		**163130** ●
400	3,5	2,5	30	KNL	120	WZ		10		**163131** ●
450	3,8	2,8	30	KNL	66	WZ	UT	10		**163132** ●
500	3,8	2,8	30	KNL	72	WZ	UT	10		**163133** ●



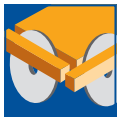



HW

Low Noise

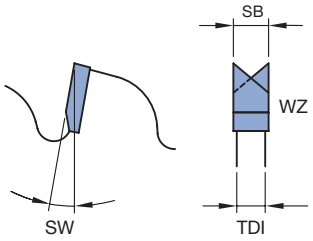

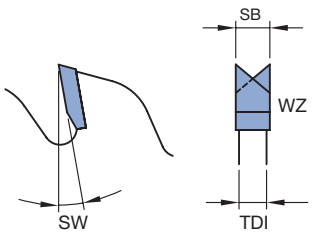

Sizing without scoring *Premium* - Mamba

Application:
For sizing and cross cutting without scoring.

Machine:
Table and sizing saws. Vertical panel sizing saws without scoring unit.

Workpiece material:
Chipboard and fibre materials paper and plastic coated, veneered, laminated veneer lumber (e.g. plywood, multiplex plywood), thin walled plastic profiles (thickness < 2 mm), thin walled plastic honeycomb boards.

Technical information:
Special WZ with 40° corner angle for tear-free cuts on both sides. **Premium** design with vibration damping laser ornaments. Particularly for machines with positioning of the saw shaft above the workpiece. Negative cutting angle for improved workpiece clamping.

Circular sawblade Mamba, negative cutting angle
WK 880 2

D mm	SB mm	TDI mm	BO mm	NLA mm	Z	ZF	SW °	WSS	ID
250	3,2	2,2	30	KNL	80	WZ	-5	■	**163225** ●
303	3,5	2,5	30	KNL	96	WZ	-5	■	**163226** ●

Technical information:
Extremely strong alternate tooth WZ with 40° corner angle for tear-free cuts in coated wood derived materials on both sides. **Premium** design with vibration-damping laser ornaments.

Circular sawblade Mamba, positive cutting angle
WK 870 2

D mm	SB mm	TDI mm	BO mm	NLA mm	Z	ZF	SW °	WSS	ID
300	3,5	2,5	30	KNL	96	WZ	5	■	**163200** ●
350	3,5	2,5	30	KNL	108	WZ	5	■	**163201** ●

● available ex stock
□ available at short notice
Instruction manual visit www.leitz.org



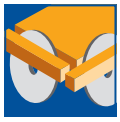



HW

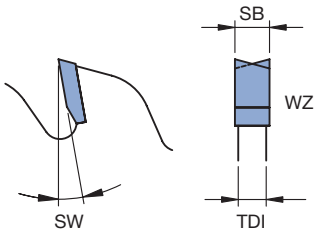

Sizing and veneer stack cut - reduced cutting width

Application:
For sizing and cross cutting with and without scoring.

Machine:
Table, sizing and veneer cutting saws.

Workpiece material:
Solid wood across grain, chipboard and fibre materials, laminated veneer lumber (e.g. plywood, multiplex plywood), veneered board stacks, plastic or derived material honeycomb boards.

Technical information:
Reduced cutting width for better material utilization and lower cutting forces. Marked ID numbers with recessed tool body and thus limited cutting depth.

Circular sawblade WZ
WK 250 2, WK 850 2, WK 850 2 10, WK 850 2 22

D	SB	TDI	BO	NLA	Z	ZF	SW	WSS	ID
mm	mm	mm	mm	mm			°		
160	1,8	1,0/2,5	16	1/6/33	48	WZ	10	■	**060574** ●
180	1,6	1,0/2,5	16	1/6/33	56	WZ	10	■	**060591** ●
180	2,4	1,6	16		58	WZ	10	■	**059665** ●
200	2,0	1,4	16		64	WZ	10	■	**059666** ●
250	1,7	1,0/2,4	30	KNL	80	WZ	10	■	**058520** ●
300	1,7	1,0/2,4	30	KNL	96	WZ	10	■	**058521** ●
450	3,0	2,2	30	2/14/125 KNL	120	WZ	20	■	**058461** ●



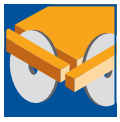







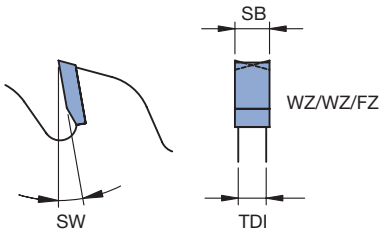

Sizing cut *Excellent* - Katana

Application:
For sizing and cross cutting without scoring.

Machine:
Table and sizing saws, vertical panel sizing machines without scoring unit, cross, trimming and
mitre cutting saws.

Workpiece material:
Solid wood across grain, laminated veneer lumber (e.g. plywood, multiplex plywood), honeycomb boards, thin walled plastic and non-ferrous metal profiles.

Technical information:
Katana tooth combination with alternating rake face bevel for highest cutting quality. High number of teeth for perfect edges and very smooth surfaces. **Excellent** design with plastic filled laser ornaments for vibration damping and reduction of noise level.

Circular sawblade Katana
WK 879 2

D mm	SB mm	TDI mm	BO mm	NLA mm	Z	ZF	SW °	WSS	ID
255	2,8	2,0	30	KNL	80	WZ/WZ/FZ	10		**161200** ●
303	3,2	2,2	30	KNL	100	WZ/WZ/FZ	10		**161201** ●
355	3,0	2,2	30	KNL	120	WZ/WZ/FZ	10		**161202** ●
400	3,2	2,5	30	KNL 2/15/63	130	WZ/WZ/FZ	20		**161203** ●
450	3,6	2,8	30	KNL 2/15/63	140	WZ/WZ/FZ	20		**161204** ●
500	4,0	3,5	30	KNL 2/15/63	150	WZ/WZ/FZ	20		**161205** ●
550	4,0	3,5	30	KNL 2/15/63	160	WZ/WZ/FZ	20		**161206** ●

● available ex stock
□ available at short notice
Instruction manual visit www.leitz.org



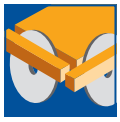









Sizing *Excellent* - WhisperCut

Application:
For sizing and trimming with scoring.

Machine:
Table and sizing saws, vertical panel sizing saws with scoring unit. Cross, trimming and mitre saws.

Workpiece material:
Solid wood across grain, laminated veneer lumber (e.g. plywood, multiplex plywood), chipboard and fibre materials plastic and paper coated, veneered and honeycomb boards.

Technical information:
Extreme noise reduction. Particularly developed group serration for perfect cutting pitch and reduction of the cutting forces. Universally applicable for most different materials. Standard cutting width of 3.2 mm allows use with standard scoring circular sawblades and standard splitting wedges. 2-fold resharpenable. **Excellent** design with filled laser ornaments for vibration damping and reduction of the noise level.

Circular sawblade WhisperCut
WK 879 2 DP

D mm	SB mm	TDI mm	BO mm	NLA mm	Z	ZF	SW °	WSS	ID
250	3,2	2,4	30	KNL	50	HZFA/WZFA	10		**190697** ●
303	3,2	2,4	30	KNL	60	HZFA/WZFA	10		**190698** ●
350	3,2	2,4	30	KNL	70	HZFA/WZFA	10		**190699** ●

Application:
For scoring with feed.

Machine:
Table and sizing saws, vertical panel sizing saws with scoring unit.

Technical information:
Hollow tooth for tear-free cuts in coated wood materials on both sides. **Excellent** design with filled laser ornaments for vibration damping and reduction of the noise level.

Scoring sawblade WhisperCut
WK 272 2

D mm	SB mm	BO mm	Z	ZF	SW °	WSS	ID
80	3,3	20	18	HZ/WZ	10		**190700** ●
120	3,3	20	18	HZ/WZ	10		**190701** ●
120	3,3	22	18	HZ/WZ	10		**190702** ●
125	3,3	20	18	HZ/WZ	10		**190703** ●



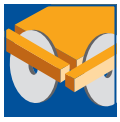



HW

Low Noise

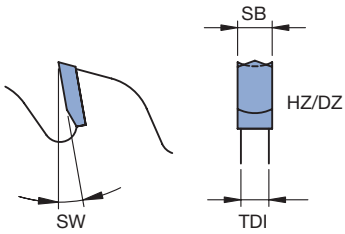

Sizing without scoring *Excellent*

Application:
For sizing and cross cutting without scoring.

Machine:
Table and sizing saws, vertical panel sizing saws without scoring unit.

Workpiece material:
Chipboard and fibre materials plastic and paper coated, veneered.

Technical information:
Excellent design with plastic filled laser ornaments for vibration damping and reduction of noise level.

Circular sawblade
WK 874 2

D mm	SB mm	TDI mm	BO mm	NLA mm	Z	ZF	SW °	WSS	ID
250	3,2	2,2	30	KNL	54	HZ/DZ	10	■	**161300** ●
303	3,2	2,2	30	KNL	68	HZ/DZ	10	■	**161301** ●
350	3,5	2,5	30	KNL	80	HZ/DZ	10	■	**161302** ●

● available ex stock
□ available at short notice
Instruction manual visit www.leitz.org



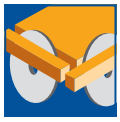



HW



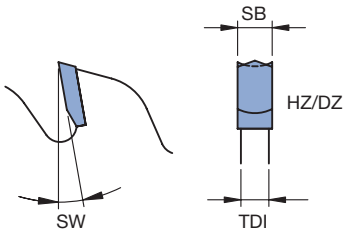

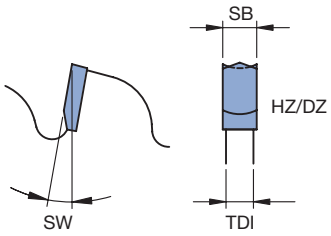

Sizing without scoring *Premium*

Application:
For sizing and cross cutting without scoring.

Machine:
Table and sizing saws, vertical panel sizing saws without scoring unit.

Workpiece material:
Chipboard and fibre materials plastic and paper coated, veneered.

Technical information:
Hollow tooth for tear-free cuts in coated wood materials on both sides. **Premium** version with vibration-damping laser ornaments.

Circular sawblade, positive cutting angle
WK 274 2

D mm	SB mm	TDI mm	BO mm	NLA mm	Z	ZF	SW °	WSS	ID
220	3,2	2,2	30	KNL	42	HZ/DZ	10	■	**163050** ●
250	3,2	2,2	30	KNL	48	HZ/DZ	10	■	**163051** ●
303	3,2	2,2	30	KNL	60	HZ/DZ	10	■	**163054** ●
303	3,5	2,5	30	KNL	60	HZ/DZ	10	■	**163052** ●
350	3,5	2,5	30	KNL	72	HZ/DZ	10	■	**163053** ●

Machine:
Vertical panel sizing saws without scoring unit.

Technical information:
Hollow tooth for tear-free cuts in coated wood materials on both sides. **Premium** version with vibration-damping laser ornaments. Especially for machines with positioning of the saw shaft above the workpiece. Negative cutting angle for improved workpiece clamping.

Circular sawblade, negative cutting angle
WK 864 2

D mm	SB mm	TDI mm	BO mm	NLA mm	Z	ZF	SW °	WSS	ID
250	3,2	2,2	30	KNL	48	HZ/DZ	-5	■	**163076** ●
303	3,2	2,2	30	KNL	60	HZ/DZ	-5	■	**163077** ●













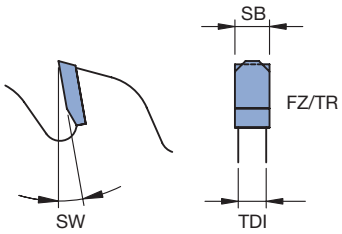

Sizing with scoring *Premium*

Application:
For sizing and trimming with scoring.

Machine:
Table and sizing saws, vertical panel sizing saws with scoring unit.

Workpiece material:
Chipboard and fibre materials, paper and plastic coated.

Technical information:
Premium version with vibration-damping laser ornaments. Marked dimensions with irregular tooth pitch (UT) for noise reduction and improved running behaviour.

Circular sawblade
WK 852 2

D mm	SB mm	TDI mm	BO mm	NLA mm	Z	ZF	Type	SW °	WSS	ID
220	3,2	2,2	30	KNL	64	FZ/TR		10	■	**163000** ●
250	3,2	2,2	30	KNL	60	FZ/TR	UT	10	■	**163002** ●
250	3,2	2,2	30	KNL	80	FZ/TR		10	■	**163003** ●
280	3,2	2,2	30	KNL	60	FZ/TR	UT	10	■	**163004** ●
300	3,2	2,2	30	KNL	72	FZ/TR	UT	10	■	**163005** ●
300	3,2	2,2	30	KNL	96	FZ/TR		10	■	**163006** ●
350	3,5	2,5	30	KNL	84	FZ/TR	UT	10	■	**163007** ●
350	3,5	2,5	30	KNL	108	FZ/TR		10	■	**163008** ●

● available ex stock
□ available at short notice
Instruction manual visit www.leitz.org

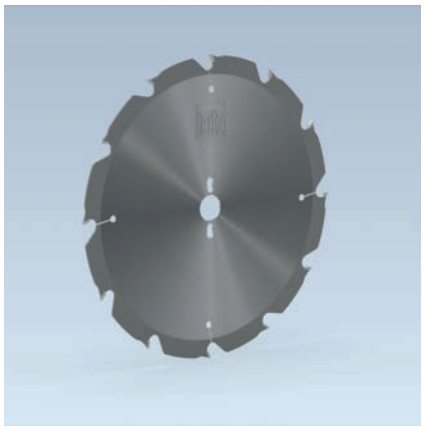





HW

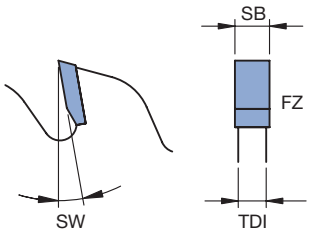

Sizing

Application:
For sizing and cross cutting with and without scoring.

Machine:
Table and sizing saws.

Workpiece material:
Solid wood along grain.

Technical information:
Low number of teeth for reduction of feed forces and lower power consumption at large cutting depths especially in solid wood longitudinal.

Circular sawblade FZ
WK 120 2

D mm	SB mm	TDI mm	BO mm	NLA mm	Z	ZF	SW °	WSS	ID
350	3,5	2,5	30	KNL	12	FZ	20	■	**163025** ●
400	3,5	2,5	30	KNL	14	FZ	20	■	**163026** ●









HW

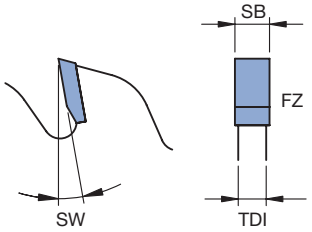

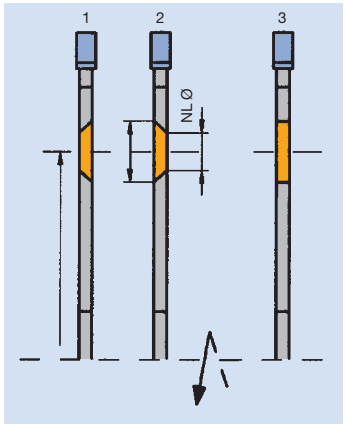

Type 1:
Countersink right
Type 2:
Countersink left
Type 3:
Pinhole without countersink

Sizing, scoring, hogging

Application:
For sizing, cross cutting and scoring with feed, for mounting on hoggers or segment hoggers.

Machine:
Table, sizing and vertical panel sizing saws.

Workpiece material:
Solid wood along grain, chipboard and fibre materials paper and plastic coated, veneered, laminated veneer lumber (e.g. plywood, multiplex plywood).

Technical information:
Suitable for mounting on spindle, flange sleeve or mounting flange on quick-clamping elements.

Scoring sawblade respectively circular sawblade for the use with hoggers. TC-version.
WK 100 2

D mm	SB mm	TDI mm	BO mm	NLA mm	Type	Z	ZF	SW °	WSS	ID
150	3,2	2,2	30			42	FZ	10	■■	**165375** ●
180	3,2	2,2	30			48	FZ	10	■■	**165378** ●
180	3,2	2,2	65	6/6/90	2	48	FZ	10	■■	**165379** ●
180	3,2	2,2	65	6/6/90	1	48	FZ	10	■■	**165380** ●
180	3,2	2,2	65	6/6/90	2	58	FZ	10	■■	**165381** ●
180	3,2	2,2	65	6/6/90	1	58	FZ	10	■■	**165382** ●
200	3,2	2,2	30			54	FZ	10	■■	**165383** ●

● available ex stock
□ available at short notice
Instruction manual visit www.leitz.org









DP

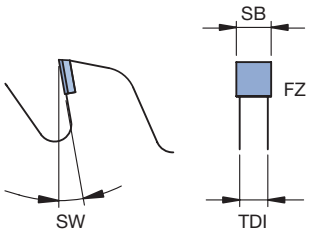

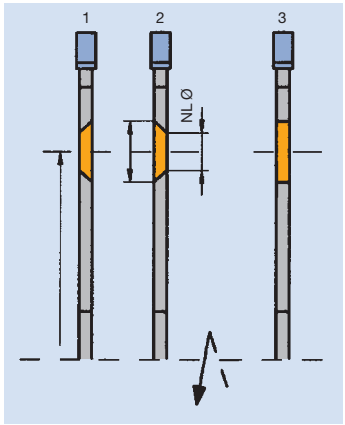

Type 1:
Countersink right
Type 2:
Countersink left
Type 3:
Pinhole without countersink

Sizing, scoring, hogging *Excellent*

Application:
For sizing, cross cutting and scoring with feed, for mounting on hoggers or segment hoggers.

Machine:
Table, sizing and vertical panel sizing saws.

Workpiece material:
Solid wood along grain, chipboard and fibre materials paper and plastic coated, veneered, laminated veneer lumber (e.g. plywood, multiplex plywood).

Technical information:
Suitable for mounting on spindle, flange sleeve or mounting flange on quick-clamping elements.

Scoring sawblade respectively circular sawblade for the use with hoggers. DP-version.
WK 800 2

D mm	SB mm	TDI mm	BO mm	NLA mm	Type	Z	ZF	SW °	WSS	ID
180	3,2	2,2	65	6/6/90	2	24	FZ	10	■■	**190660** □
180	3,2	2,2	65	6/6/90	1	24	FZ	10	■■	**190661** □
180	3,2	2,2	65	6/6/90	2	36	FZ	10	■■	**190662** □
180	3,2	2,2	65	6/6/90	1	36	FZ	10	■■	**190663** □
180	3,2	2,2	65	6/6/90	2	48	FZ	10	■■	**190664** □
180	3,2	2,2	65	6/6/90	1	48	FZ	10	■■	**190665** □







HW

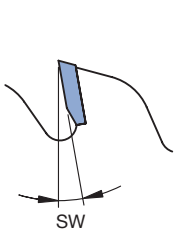

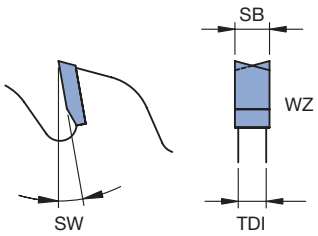

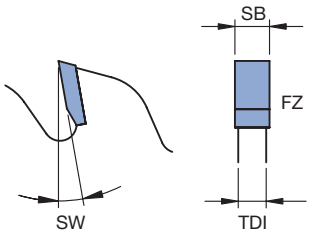

Scoring sawblades with adjustable cutting width

Application:
For scoring with feed.

Machine:
Table and sizing saws, vertical panel sizing saws with scoring unit.

Workpiece material:
Chipboard and fibre materials paper and plastic coated, veneered, laminated veneer lumber (e.g. plywood, multiplex plywood).

Technical information:
2 part design, adjustable with spacers. Scoring depth 1.50 - 2.00 mm.

Scoring sawblades adjustable, TC-version
WK 200 2, WK 250 2

Machine	D mm	SB mm	BO mm	Z	ZF	SW °	WSS	ID
Felder, Striebig	80	2,8 - 3,6	20	10+10	FZ	10	■	**165401** ●
Schelling	100	2,8 - 3,6	20	10+10	FZ	10	■	**165402** ●
Altendorf	100	2,8 - 3,6	22	10+10	FZ	10	■	**165403** ●
SCM, Felder	120	2,8 - 3,6	20	12+12	FZ	10	■	**165404** ●
Altendorf	120	2,8 - 3,6	22	12+12	FZ	10	■	**165406** ●
Felder	125	2,8 - 3,6	20	12+12	FZ	10	■	**165407** ●
Martin	140	2,8 - 3,8	36	12+12	WZ	10	■	**165408** ●
Altendorf	180	3,0 - 3,8	22	18+18	WZ	10	■	**165410** ●

Technical information:
Two-part, automatically adjustable through machine control.
Scoring depth 1,50 - 2,00 mm.

Scoring sawblades for stepless adjustment, TC-version
WK 200 2

Machine	D mm	SB mm	BO mm	Z	ZF	SW °	WSS	ID
Altendorf	120	2,8 - 3,6	50	12+12	FZ	10	■	**165412** ●
Martin T74 Automatic	120	2,8 - 3,6	22	12+12	FZ	10	■	**165405** ●
Altendorf	180	3,0 - 3,8	50	18+18	FZ	10	■	**165413** ●

● available ex stock
□ available at short notice
Instruction manual visit www.leitz.org





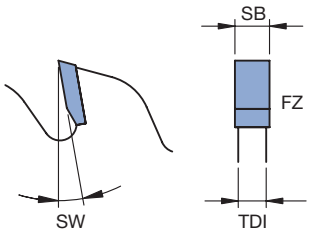

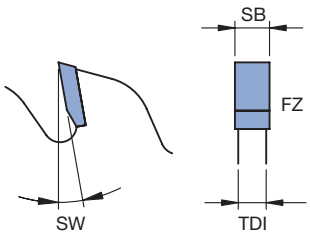

Scoring sawblades with adjustable cutting width
Excellent

Application:
For scoring with feed.

Machine:
Table and sizing saws, vertical panel sizing saws with scoring unit.

Workpiece material:
Chipboard and fibre materials paper and plastic coated, veneered, laminated veneer lumber (e.g. plywood, multiplex plywood).

Technical information:
2 part design, adjustable with spacers. Scoring depth 1.50 - 2.00 mm.

Scoring sawblades adjustable, DP-version
WK 200 2

D mm	SB mm	BO mm	Z	ZF	SW °	WSS	ID
120	2,8 - 3,6	20	12+12	FZ	10	■	**190731** ●
120	2,8 - 3,6	22	12+12	FZ	10	■	**190694** ●
125	2,8 - 3,6	20	12+12	FZ	10	■	**190695** ●

Technical information:
Two-part, automatically adjustable through machine control.
Scoring depth 1,50 - 2,00 mm.

Scoring sawblades for stepless adjustment, DP-version
WK 200 2

D mm	SB mm	BO mm	Z	ZF	SW °	WSS	ID
120	2,8 - 3,6	50	12+12	FZ	10	■	**190704** ●

Working process	For sizing single boards or boards in stacks.
Workpiece materials	Solid wood, wood derived materials and plastic.
Machines	Table saws and panel sizing saws with pressure clamping beam.
Type of application	Scoring sawblades cut with the feed main sawblades cut against the feed.

Tooth shape

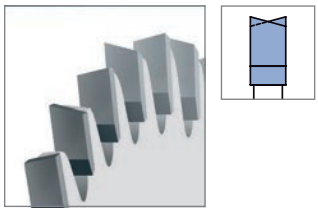

WZ (alternative top bevel teeth): Multi-purpose tooth shape, economical to purchase and maintain. Ideal for chip-board, veneered chipboard, solid wood, block board, plywood and similar materials.

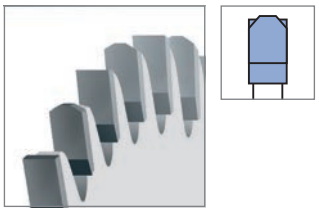

FZ/TR (square/trapezoidal teeth): Tooth shape for plastic coated and foil coated wood derived materials.

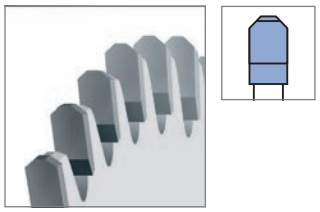

TR/TR (trapezoidal/trapezoidal teeth): Tooth shape for especially abrasive materials such as HPL or CPL coated wood derived materials.

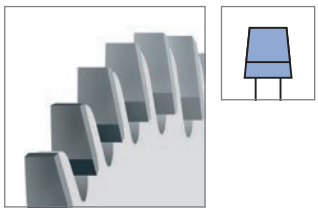

KON/FZ (flat teeth – conical): For scoring sawblades. Prevents splitting of the cut edge by the main sawblade as it passes through the bottom surface of the panel.

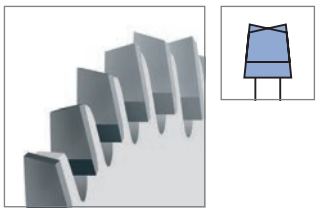

KON/WZ (alternative top bevel teeth – conical): For scoring sawblades. Prevents splitting of the cut edge by the main sawblade as it passes through the bottom surface of the panel with low cutting pressure.

Scoring sawblades

A scoring saw is recommended for a high cut edge quality on both sides of coated panels. The scoring sawblade cutting width (kerf) is slightly larger than the width (kerf) of the main sawblade so the exiting tooth of the main sawblade does not touch the bottom surface cut edge.

As precise, flat workpiece positioning is only possible with pressure clamping, split scoring sawblades are used on table and panel saw.

Schematic representation

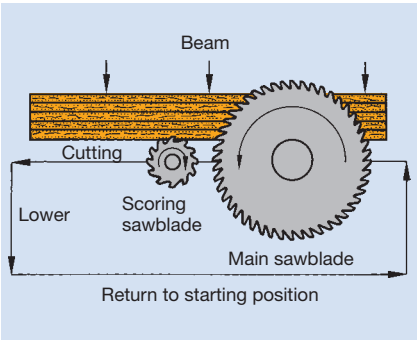

Panel sizing machine with scoring saw and top pressure beam.

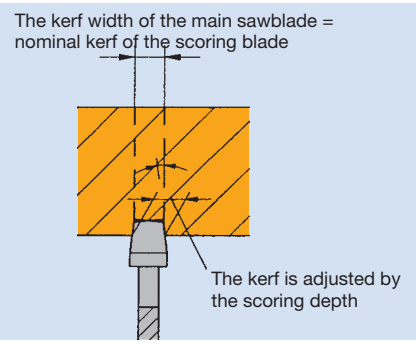

Setting of conical scoring sawblade. The cutting width (kerf) has to be matched to the cutting width (kerf) of the main saw during maintenance of the tools.









HW

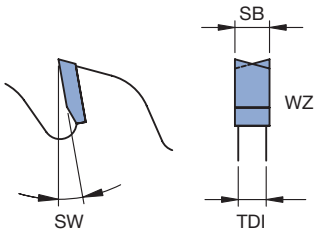

Sizing of single boards and stacks of boards *Premium*

Application:
For panel sizing of single boards and stacks of boards with and without scoring.

Machine:
Panel sizing saws with pressure beam.

Workpiece material:
Chipboard and fibre materials, laminated veneer lumber (e.g. plywood, multiplex plywood).

Technical information:
Premium version with vibration-damping laser ornaments.

Circular sawblade
WK 250 2

Machine	D mm	SB mm	TDI mm	BO mm	NLA mm	Z	ZF	SW °	WSS	ID
	300	4,4	3,2	30	KNL	48	WZ	15	■	**163300** ●
Holz-Her, Mayer, Schelling	350	4,4	3,2	30	KNL 2/13/94	54	WZ	15	■	**163301** ●
Holz-Her, Mayer, Schelling	350	4,4	3,2	30	KNL 2/13/94	72	WZ	15	■	**163302** ●
Homag	350	4,4	3,2	60	2/14/100	72	WZ	15	■	**163304** ●
Gabbiani, SCM	350	4,4	3,2	80	4/9/100 2/14/110 2/7/110	54	WZ	15	■	**163305** ●
Mayer, Schelling	355	4,4	3,2	30	KNL 2/13/94	72	WZ	15	■	**163306** ●
Holz-Her, Giben, Homag	380	4,4	3,2	30	KNL 4/13/80 2/14/100 2/14/125	72	WZ	15	■	**163319** ●
Homag	380	4,8	3,5	60	2/14/100 2/14/125	54	WZ	15	■	**163307** ●
Mayer, Schelling	400	4,4	3,2	30	KNL 2/13/94	60	WZ	15	■	**163308** ●
Mayer, Schelling	400	4,4	3,2	30	KNL 2/13/94	72	WZ	15	■	**163309** ●
Schelling	430	4,4	3,2	30	KNL	72	WZ	15	■	**163310** ●
Mayer, Schelling	450	4,4	3,2	30	KNL 2/13/94	54	WZ	15	■	**163311** ●
Mayer, Schelling	450	4,4	3,2	30	KNL 2/13/94	72	WZ	15	■	**163312** ●
Schelling	480	4,4	3,2	30	KNL 2/13/94	72	WZ	15	■	**163313** ●
Schelling	500	5,2	3,5	30	KNL	60	WZ	15	■	**163314** ●
	500	5,2	3,5	80		60	WZ	15	■	**163315** ●
Schelling	520	4,4	3,2	30	2/13/94	72	WZ	15	■	**163316** ●
	550	5,2	3,5	30	KNL	60	WZ	15	■	**163317** ●
	550	5,2	3,5	80	2/13/100	60	WZ	15	■	**163318** ●









HW

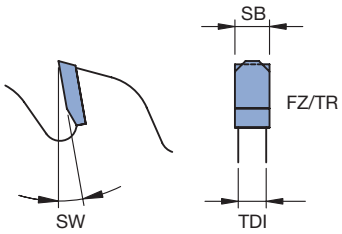

Sizing of single boards and stacks of boards *Premium*

Application:
For panel sizing of single boards and stacks of boards with scoring.

Machine:
Panel sizing saws with scoring unit and pressure beam.

Workpiece material:
Chipboard and fibre materials paper and plastic coated, veneered.

Technical information:
Premium design with vibration damping laser ornaments.

Circular sawblade
WK 852 2

Machine	D mm	SB mm	TDI mm	BO mm	NLA mm	Z	ZF	SW °	WSS	ID
	300	4,4	3,2	30	KNL	60	FZ/TR	15	■	**163400** ●
Homag	300	4,4	3,2	60	2/14/100	72	FZ/TR	15	■	**163401** ●
Selco	300	4,4	3,2	65	2/9/110	60	FZ/TR	15	■	**163402** ●
Homag	300	4,4	3,2	75		60	FZ/TR	15	■	**163403** ●
Gabbiani, SCM	300	4,4	3,2	80	2/14/110 2/7/110 4/9/100 4/19/120 2/9/130	60	FZ/TR	15	■	**163456** ●
Homag	308	3,2	2,4	60	2/14/100	96	FZ/TR	15	■	**163404** ●
Homag	310	4,4	3,2	60	2/14/100	72	FZ/TR	15	■	**163405** ●
Felder, Mayer	320	4,4	3,2	30	KNL	60	FZ/TR	15	■	**163406** ●
Selco	320	4,4	3,2	65	2/9/110	60	FZ/TR	15	■	**163407** ●
Gabbiani, SCM	320	4,4	3,2	80	2/14/110 2/7/110 4/9/100 4/19/120 2/9/130	60	FZ/TR	15	■	**163457** ●
Gabbiani, SCM	340	4,4	3,2	80	2/14/110 2/7/110 4/9/100 4/19/120 2/9/130	72	FZ/TR	15	■	**163458** ●
Holz-Her, Mayer, Schelling	350	4,4	3,2	30	KNL 2/13/94	72	FZ/TR	15	■	**163408** ●
Homag	350	4,4	3,2	60	2/14/100	72	FZ/TR	15	■	**163409** ●
Homag	350	4,4	3,2	75		72	FZ/TR	15	■	**163410** ●
Gabbiani, SCM	350	4,4	3,2	80	4/9/100 2/7/110 2/14/110	72	FZ/TR	15	■	**163454** ●
Selco	355	4,4	3,2	65	2/9/110 2/9/100	72	FZ/TR	15	■	**163412** ●
Giben, Homag	355	4,4	3,2	75		72	FZ/TR	15	■	**163413** ●
Schelling	360	4,4	3,2	30	2/13/94	72	FZ/TR	15	■	**163414** ●
Selco	360	4,4	3,2	65	2/9/100 2/9/110	72	FZ/TR	15	■	**163415** ●
	370	4,4	3,2	30	2/13/94 KNL	72	FZ/TR	15	■	**163416** ●
Giben	380	4,4	3,2	50	2/13/80 6/13/80	72	FZ/TR	15	■	**163417** ●
Homag	380	4,4	3,2	60	2/14/100 2/14/125	72	FZ/TR	15	■	**163418** ●
Selco	380	4,4	3,2	65	2/9/110	72	FZ/TR	15	■	**163461** ●
Homag	380	4,8	3,5	60	2/14/100 2/14/125	72	FZ/TR	15	■	**163419** ●
Giben	380	4,4	3,2	75	3/15/75 2/7/110	72	FZ/TR	15	■	**163420** ●
Gabbiani, SCM	380	4,4	3,2	80	2/14/110 2/7/110 4/9/100 4/19/120 2/9/130	72	FZ/TR	15	■	**163459** ●

● available ex stock
□ available at short notice
Instruction manual visit www.leitz.org

1.4 Panel sizing
1.4.2 Panel sizing sawblades FZ/TR

Machine	D mm	SB mm	TDI mm	BO mm	NLA mm	Z	ZF	SW °	WSS	ID
Mayer, Schelling	400	4,4	3,2	30	KNL 2/13/94	72	FZ/TR	15	■	**163421** ●
Anthon	400	4,4	3,2	60	2/11/85	72	FZ/TR	15	■	**163422** ●
Giben, Homag	400	4,4	3,2	75	4/15/105 2/7/110	72	FZ/TR	15	■	**163423** ●
Gabbiani, Selco, SCM	400	4,4	3,2	80	2/14/110 2/7/110 4/9/100 4/19/120 2/9/130	72	FZ/TR	15	■	**163455** ●
Homag	420	4,8	3,5	60	2/14/125 2/19/120	72	FZ/TR	15	■	**163426** ●
Schelling	430	4,4	3,2	30	KNL	72	FZ/TR	15	■	**163427** ●
Giben	430	4,4	3,2	75	4/15/105 2/7/110	72	FZ/TR	15	■	**163428** ●
Selco, Gabbiani, SCM	430	4,4	3,2	80	2/14/110 2/7/110 4/9/100 4/19/120 2/9/130	72	FZ/TR	15	■	**163429** ●
Mayer, Schelling	450	4,4	3,2	30	KNL 2/13/94	72	FZ/TR	15	■	**163430** ●
Homag	450	4,8	3,5	60	2/14/125 2/19/120	72	FZ/TR	15	■	**163431** ●
Gabbiani, SCM	450	4,4	3,2	80	2/9/100 2/14/110 2/7/110	72	FZ/TR	15	■	**163432** ●
Selco	450	4,8	3,6	80	2/9/130 4/19/120	72	FZ/TR	15	■	**163433** ●
Schelling	460	4,4	3,2	30	2/13/94	72	FZ/TR	15	■	**163434** ●
Giben	470	4,4	3,2	75	4/15/105	96	FZ/TR	15	■	**163435** ●
Schelling	480	4,4	3,2	30	KNL 2/13/94	72	FZ/TR	15	■	**163436** ●
Homag	480	4,8	3,5	60	2/19/120	72	FZ/TR	15	■	**163437** ●
Selco	480	4,8	3,5	80	2/9/130 4/19/120	72	FZ/TR	15	■	**163438** ●
Schelling	500	5,2	3,5	30	KNL	60	FZ/TR	15	■	**163439** ●
Anthon, Homag	500	5,2	3,5	60	2/11/115 2/19/120	60	FZ/TR	15	■	**163440** □
Selco	510	4,8	3,5	80	2/9/130 4/19/120	72	FZ/TR	15	■	**163441** ●
Schelling	520	4,4	3,2	30	2/13/94	72	FZ/TR	15	■	**163442** ●
Homag	520	4,8	3,5	60	2/11/115 2/19/120	72	FZ/TR	15	■	**163443** ●
Selco	520	4,8	3,5	70	4/11/130	72	FZ/TR	15	■	**163444** ●
Gabbiani, SCM	530	4,8	3,5	80	4/9/100 2/14/110 2/7/110	72	FZ/TR	15	■	**163460** ●
Homag	570	4,8	3,5	60	2/11/115 2/19/120	60	FZ/TR	22	■	**163445** ●
Homag, Anthon	600	5,8	4,0	60	2/19/120 2/11/115 2/11/85	60	FZ/TR	22	■	**163446** ●
Homag, Anthon	600	5,8	4,0	60	2/19/120 2/11/115 2/11/85	72	FZ/TR	22	■	**163447** ●
Homag	670	5,8	4,2	60	2/11/148 2/19/120	42	FZ/TR	22	■	**163448** ●
Schelling	680	6,2	4,2	40	2/13/114 2/13/140	60	FZ/TR	22	■	**163449** ●
Anthon	700	6,2	4,4	80	1/17/110	60	FZ/TR	22	■	**163450** ●
Schelling	720	6,5	4,5	40	2/13/140 2/13/114	60	FZ/TR	22	■	**163451** ●
Homag	730	6,2	4,2	60	2/11/148 2/19/120	60	FZ/TR	22	■	**163452** ●
Anthon	750	7,0	5,0	80	1/17/110	70	FZ/TR	22	■	**163453** ●







HW

Low Noise

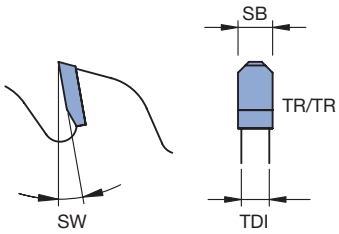

Sizing of single boards in finish cut quality - RazorCut

Application:
For panel sizing of single boards and stacks of boards with low cutting heights (up to 60 mm) with scoring.

Machine:
Panel sizing saws with scoring unit and pressure beam.

Workpiece material:
Chipboard and fibre materials plastic coated, duroplastics (compact laminate panels, e.g. HPL).

Technical information:
Special cutting geometry for excellent cutting results in finish cut quality. Suitable for high feed speeds in batch size 1 production. Design with irregular pitch and vibration damping laser ornaments for optimal running behaviour.

Circular sawblade RazorCut
WK 878 2 87

Machine	D mm	SB mm	TDI mm	BO mm	NLA mm	Z	ZF	SW °	WSS	ID
	300	3,2	2.2	30	KNL	72	TR/TR	15		**163370** ●
	300	4,4	3.2	30	KNL	60	TR/TR	15		**163369** ●
Homag	300	4,4	3.2	60	2/14/100	72	TR/TR	15		**163371** ●
Selco	300	4,4	3.2	65	2/9/110	60	TR/TR	15		**163372** ●
Giben	320	4,4	3.2	50	3/15/80	60	TR/TR	15		**163374** ●
Homag	320	4,4	3.2	60	2/14/100	72	TR/TR	15		**163394** ●
Selco	320	4,4	3.2	65	2/9/110	60	TR/TR	15		**163375** ●
Giben	320	4,4	3.2	75	3/13/95 3/7/100	60	TR/TR	15		**163376** ●
SCM, Gabbiani	320	4,4	3.2	80	2/14/110 2/7/110 4/9/100 4/19/120 2/9/130	60	TR/TR	15		**163377** ●
Holz-Her, Mayer, Schelling	350	4,4	3.2	30	KNL 2/13/94	72	TR/TR	15		**163379** ●
Homag	350	4,4	3.2	60	2/14/100	72	TR/TR	15		**163380** ●
Giben	350	4,4	3,2	75		72	TR/TR	15		**163395** ●
Selco	355	4,4	3.2	65	2/9/100 2/9/110	72	TR/TR	15		**163381** ●
Schelling	360	4,4	3.2	30	2/13/94	72	TR/TR	15		**163382** ●
Holz-Her	380	4,4	3.2	30	KNL	72	TR/TR	15		**163383** ●
Giben	380	4,4	3,2	50	4/13/80	72	TR/TR	15		**163396** ●
Homag	380	4,4	3.2	60	2/14/100 2/14/125	72	TR/TR	15		**163384** ●
Selco	380	4,4	3.2	65	2/9/110	72	TR/TR	15		**163386** ●
Homag	380	4,8	3.5	60	2/14/100 2/14/125	72	TR/TR	15		**163385** ●
Homag	380	4,8	3,5	60	2/14/100 2/14/125	84	TR/TR	15		**163750** ●
Mayer, Schelling	400	4,4	3.2	30	KNL 2/13/94	72	TR/TR	15		**163387** ●
Selco	400	4,4	3.2	65	2/9/110	72	TR/TR	15		**163388** ●
Selco	430	4,4	3.2	65	2/9/110	72	TR/TR	15		**163389** ●
SCM, Gabbiani, Selco	430	4,4	3,2	80	2/14/110 2/7/110 4/9/100 4/19/120 2/9/130	72	TR/TR	15		**163397** ●
Homag	450	4,8	3.5	60	2/14/125 2/19/120	72	TR/TR	15		**163390** ●

● available ex stock
□ available at short notice
Instruction manual visit www.leitz.org

Machine	D mm	SB mm	TDI mm	BO mm	NLA mm	Z	ZF	SW °	WSS	ID
Selco	450	4,8	3,5	80	2/9/130 4/19/120	72	TR/TR	15		**163398** ●
Schelling	460	4,4	3.2	30	2/13/94	72	TR/TR	15		**163391** ●
Selco	470	4,8	3.5	70	4/11/130	72	TR/TR	15		**163392** ●
Anthon, Homag	500	4,8	3.5	60	2/11/115 2/19/20	72	TR/TR	15		**163393** ●
Schelling	520	4,8	3,5	30	2/13/94	72	TR/TR	15		**163399** ●







HW

Low Noise

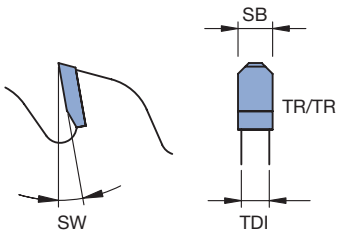

Sizing of single boards in finish cut quality - RazorCut PLUS

Application:
For panel sizing of single boards and stacks of boards with low cutting heights (up to 60 mm) with scoring.

Machine:
Panel sizing saws with scoring unit and pressure beam.

Workpiece material:
Chipboard and fibre materials plastic coated, duroplastics (compact laminate panels, e.g. HPL).

Technical information:
Optimal cutting quality due to special cutting edge geometry and maximal quite running. Suitable for high feed speeds in batch size 1 production. Design with irregular pitch and vibration damping laser ornaments for optimal running behaviour. Maximal tool life through extremely wear-resistant cutting material.

Circular sawblade RazorCut PLUS
WK 878 2 87

Machine	D mm	SB mm	TDI mm	BO mm	NLA mm	Z	ZF	SW °	WSS	ID
	250	3,2	2.2	30	KNL	60	TR/TR	15		**161135** ●
	280	3,2	2.2	30	KNL	60	TR/TR	15		**161136** ●
	300	3,2	2,2	30	KNL	72	TR/TR	15		**161138** ●
Schelling	300	3,2	2,5	30	2/13/94	72	TR/TR	15		**161139** ●
	300	4,4	3,0	30	KNL	60	TR/TR	15		**161137** ●
Homag	300	4,4	3,0	60	2/14/100	72	TR/TR	15		**161140** ●
Selco	300	4,4	3,0	65	2/9/110	60	TR/TR	15		**161141** ●
SCM, Gabbiani	300	4,4	3,0	80	2/14/110 2/7/110 4/9/100 4/19/120 2/9/130	60	TR/TR	15		**161142** ●
Homag	308	3,2	2,4	60	2/14/100	96	TR/TR	15		**161143** ●
Homag	310	4,4	3,2	60	2/14/100	72	TR/TR	15		**161144** ●
Giben	320	4,4	3,2	50	3/15/80	60	TR/TR	15		**161145** ●
Selco	320	4,4	3,2	65	2/9/110	60	TR/TR	15		**161146** ●
SCM, Gabbiani	340	4,4	3,2	80	2/14/110 2/7/110 4/9/100 4/19/120 2/9/130	72	TR/TR	15		**161148** ●
Holz-Her, Mayer, Schelling	350	4,4	3,2	30	KNL 2/13/94	72	TR/TR	15		**161149** ●

1.4 Panel sizing
1.4.3 Panel sizing sawblades TR/TR

Machine	D mm	SB mm	TDI mm	BO mm	NLA mm	Z	ZF	SW °	WSS	ID
Homag	350	4,4	3,2	60	2/14/100	72	TR/TR	15		**161150** ●
Giben	350	4,4	3,2	75		72	TR/TR	15		**161151** ●
Selco	355	4,4	3,2	65	2/9/100 2/9/110	72	TR/TR	15		**161152** ●
Selco	355	4,4	3,2	80	2/9/130 4/19/120	72	TR/TR	15		**161153** ●
Schelling	360	4,4	3,2	30	2/13/94	72	TR/TR	15		**161154** ●
	370	4,4	3,2	30	KNL	72	TR/TR	15		**161155** ●
Holz-Her	380	4,4	3,2	30	KNL	72	TR/TR	15		**161156** ●
Giben	380	4,4	3,2	50	4/13/80	72	TR/TR	15		**161157** ●
Homag	380	4,4	3,2	60	2/14/100 2/14/125	72	TR/TR	15		**161158** ●
SCM, Gabbiani	380	4,4	3,2	80	2/14/110 2/7/110 4/9/100 4/19/120 2/9/130	72	TR/TR	15		**161160** ●
Homag	380	4,8	3,5	60	2/14/100 2/14/125	72	TR/TR	15		**161159** ●
Mayer, Schelling	400	4,4	3,2	30	KNL 2/13/94	72	TR/TR	15		**161161** ●
Giben, Homag	400	4,4	3,2	75	4/15/105 2/7/110	72	TR/TR	15		**161162** ●
SCM, Gabbiani, Selco	400	4,4	3,2	80	2/14/110 2/7/110 4/9/100 4/19/120 2/9/130	72	TR/TR	15		**161163** ●
Homag	420	4,8	3,5	60	2/14/125 2/19/120	72	TR/TR	15		**161164** ●
Schelling	430	4,4	3,2	30	KNL	72	TR/TR	15		**161165** ●
Giben	430	4,4	3,2	75	4/15/105 2/7/110	72	TR/TR	15		**161166** ●
SCM, Gabbiani, Selco	430	4,4	3,2	80	2/14/110 2/7/110 4/9/100 4/19/120 2/9/130	72	TR/TR	15		**161167** ●
Mayer, Schelling	450	4,4	3,2	30	KNL 2/13/94	72	TR/TR	15		**161168** ●
Homag	450	4,8	3,5	60	2/14/125 2/19/120	72	TR/TR	15		**161169** ●
Schelling	460	4,4	3,2	30	2/13/94	72	TR/TR	15		**161170** ●

● available ex stock
□ available at short notice
Instruction manual visit www.leitz.org









DP

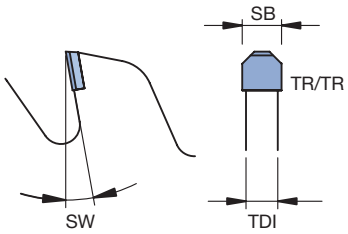

Sizing of single boards and stacks of boards *Excellent*

Application:
For panel sizing of single boards and stacks of boards with scoring.

Machine:
Panel sizing saws with scoring unit and pressure beam.

Workpiece material:
Chipboard and fibre materials plastic coated, duroplastics (compact laminate panels, e.g. HPL), fibre reinforced materials (e.g. GFRP, CFRP).

Technical information:
DP equipment for long tool life. **Excellent** version with irregular tooth pitch and filled laser ornaments for vibration damping and reduction of noise level. Coating of the tool body for higher running performance. Mounting height 6 mm for multiple resharpening.

Panel sizing sawblade TR/TR, Diamaster PLUS
WK 278 2, WK 858 2

Machine	D mm	SB mm	TDI mm	BO mm	NLA mm	Z	ZF	SW °	WSS	ID
	300	4,4	3,2	30	KNL	60	TR/TR	15		**190706** ●
Homag	308	3,2	2,4	60	2/14/100	96	TR/TR	10		**190746** ●
Holz-Her, Mayer, Schelling	350	4,4	3,2	30	KNL 2/13/94	72	TR/TR	15		**190707** ●
Homag	350	4,4	3,2	60	2/14/100 2/14/125	72	TR/TR	15		**190708** ●
Homag	380	4,4	3,2	60	2/14/100 2/14/125	72	TR/TR	15		**190709** ●
Homag	380	4,8	3,5	60	2/14/100 2/14/125	72	TR/TR	15		**190710** ●
Mayer, Schelling	400	4,4	3,2	30	KNL 2/13/94	72	TR/TR	15		**190711** ●
Homag	450	4,8	3,5	60	2/14/125 2/19/120	72	TR/TR	15		**190712** ●













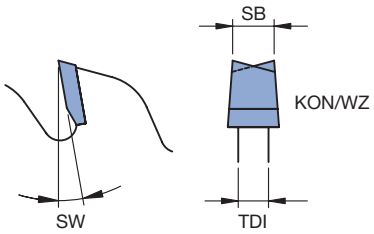

Scoring sawblade KON/WZ

Application:
For scoring with feed.

Machine:
Panel sizing saws with scoring unit and pressure beam.

Workpiece material:
Chipboard and fibre materials paper and plastic coated, veneered, laminated veneer lumber (e.g. plywood, multiplex plywood).

Technical information:
Scoring depth 1.50 - 2.00 mm. For universal use in any surface coating. The suitable scoring circular sawblade must be selected depending on the cutting width of the main saw.

Scoring sawblade KON/WZ, TC design
WK 856 2 01, WK 856 2 05

Machine	D mm	SB mm	TDI mm	BO mm	NLA mm	Z	ZF	SW °	WSS	ID
	125	3,2	2,5	20		24	KON/WZ	5	■	**165550** ●
	125	3,2	2,5	22		24	KON/WZ	5	■	**165551** ●
Giben, Homag, Mayer	125	4,4	3,5	45		24	KON/WZ	5	■	**165553** ●
Schelling	150	4,4	3,5	20		24	KON/WZ	5	■	**165554** ●
Felder, Mayer	150	4,4	3,5	30		36	KON/WZ	5	■	**165555** ●
Felder, Mayer	150	4,4	3,5	30		24	KON/WZ	5	■	**165556** ●
Homag	150	4,4	3,5	45		24	KON/WZ	5	■	**165557** ●
Homag	150	4,4	3,5	45		28	KON/WZ	5	■	**165558** ●
	160	3,2	2,5	20		32	KON/WZ	5	■	**165559** ●
Steton	160	4,4	3,5	30		36	KON/WZ	5	■	**165560** ●
Giben	160	4,4	3,5	45	3/11/70	36	KON/WZ	5	■	**165561** ●
Gabbiani	160	4,4	3,5	55	3/7/66 3/6/84	36	KON/WZ	5	■	**165562** ●
	180	3,2	2,5	20		36	KON/WZ	5	■	**165563** ●
Holz-Her	180	3,2	2,5	30		36	KON/WZ	5	■	**165587** ●
	180	4,4	3,5	20		36	KON/WZ	5	■	**165564** ●
Anthon, Homag	180	4,4	3,5	45		30	KON/WZ	5	■	**165565** ●
Anthon, Homag	180	4,4	3,5	45		36	KON/WZ	5	■	**165566** ●
Giben	180	4,5	3,2	50	3/13/80	36	KON/WZ	5	■	**165567** ●
Schelling	200	4,4	3,5	20	2/11/66	36	KON/WZ	5	■	**165569** ●
	200	6,2	4,5	20	2/11/66	36	KON/WZ	5	■	**165570** ●
	200	3,2	2,5	30	2/10/60	60	KON/WZ	5	■	**165571** ●
	200	4,4	3,5	30	2/10/60	36	KON/WZ	5	■	**165572** ●
Schelling	200	4,8	3,5	20		36	KON/WZ	5	■	**165573** ●
Homag	200	4,4	3,5	45		36	KON/WZ	5	■	**165574** ●
Homag	200	5,8	4,6	45		36	KON/WZ	5	■	**165575** ●
Selco	200	4,4	3,5	65	2/9/100 2/9/110	36	KON/WZ	5	■	**165576** ●
Selco	200	4,8	3,5	65	2/9/100 2/9/110	36	KON/WZ	5	■	**165577** ●
Giben	215	4,4	3,5	50	3/15/80 2/7/80	42	KON/WZ	5	■	**165578** ●
Schelling	220	6,5	4,5	20	2/11/66	36	KON/WZ	5	■	**165579** ●
Homag	280	4,8	3,5	45		72	KON/WZ	5	■	**165581** ●
Schelling	300	4,4	3,5	30	2/11/73 2/13/94	48	KON/WZ	5	■	**165582** ●
Giben	300	4,4	3,5	50	3/15/80	48	KON/WZ	5	■	**165583** ●
Selco	300	4,4	3,5	65	2/9/100 2/9/110	72	KON/WZ	5	■	**165584** ●
Selco	300	4,4	3,5	65	3/15/80 2/9/110	48	KON/WZ	5	■	**165585** □

● available ex stock
□ available at short notice
Instruction manual visit www.leitz.org













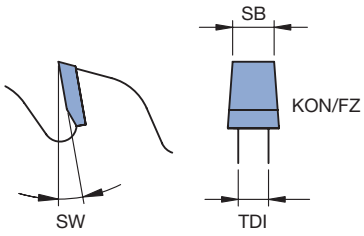

Scoring sawblades KON/FZ

Application:
For scoring with feed.

Machine:
Panel sizing saws with scoring unit and pressure beam.

Workpiece material:
Chipboard and fibre materials paper and plastic coated, veneered, laminated veneer lumber (e.g. plywood, multiplex plywood).

Technical information:
Scoring depth 1.50 - 2.00 mm. Recommended especially for use in plastic and HPL-coated panels. The suitable circular scoring sawblade must be selected depending on the cutting width of the main saw.

Scoring sawblades KON/FZ, TC design
WK 804 2

Machine	D mm	SB mm	TDI mm	BO mm	NLA mm	Z	ZF	SW °	WSS	ID
SCM	100	3,2	2,5	20		20	KON/FZ	5	■	**165625** ●
	100	3,2	2,5	22		20	KON/FZ	5	■	**165626** ●
	120	3,2	2,5	20		24	KON/FZ	5	■	**165627** ●
	125	4,4	3,5	20		24	KON/FZ	5	■	**165628** ●
Holz-Her	125	4,4	3,5	45		24	KON/FZ	5	■	**165629** ●
Anthon	180	4,4	3,5	20		28	KON/FZ	5	■	**165630** ●
Anthon	180	5,8	4,0	20		36	KON/FZ	5	■	**165631** ●
Holz-Her	180	4,4	3,5	30	2/10/60	30	KON/FZ	5	■	**165632** ●
Homag	180	4,4	3,5	45		36	KON/FZ	5	■	**165633** ●
Homag	180	4,8	3,5	45		36	KON/FZ	5	■	**165634** ●
Anthon	200	6,8	4,2	20		36	KON/FZ	5	■	**165635** ●
Homag	200	4,8	3,5	45		36	KON/FZ	5	■	**165636** ●
SCM	200	4,4	3,5	80	2/14/110	36	KON/FZ	5	■	**165637** ●
Homag	220	3,2	2,4	45		60	KON/FZ	5	■	**165638** ●
	250	4,4	3,5	30	2/10/60	42	KON/FZ	5	■	**165639** ●
Holz-Her	280	4,4	3,5	30	2/10/60	48	KON/FZ	5	■	**165640** ●
Schelling	300	3,2	2,8	30	2/13/94	72	KON/FZ	5	■	**165641** ●













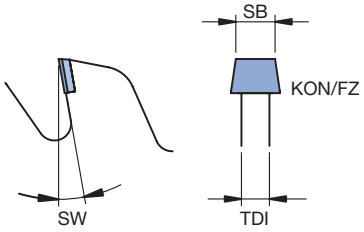

Scoring sawblades KON/FZ *Excellent*

Application:
For scoring with feed.

Machine:
Panel sizing saws with scoring unit and pressure beam.

Workpiece material:
Chipboard and fibre materials paper and plastic coated, veneered, laminated veneer lumber (e.g. plywood, multiplex plywood), alu composite panels (e.g. Alucobond®), duroplastics (compact laminate panels, e.g. HPL), fibre reinforced materials (e.g. GFRP, CFRP)

Technical information:
Scoring depth 2.00 - 2.50 mm. Recommended especially for use in plastic and HPL-coated panels. Long tool life due to DP tipping. The suitable circular scoring sawblade must be selected depending on the cutting width of the main saw. Can be used in combination with HW- and DP-tipped main circular sawblades. The cutting width (SB) of the scoring circular sawblades is 0.1 mm less for use in combination with resharpened TC-tipped main circular sawblades.

Scoring sawblades KON/FZ, Diamaster PLUS
WK 804 2

Machine	D mm	SB mm	TDI mm	BO mm	NLA mm	Z	ZF	SW °	WSS	ID
	125	3,1	2,5	20		20	KON/FZ	10		**190564** ●
	125	3,1	2,5	22		20	KON/FZ	10		**190614** □
Felder, Mayer	150	4,3	3,2	30		24	KON/FZ	10		**190565** ●
Gabbiani	160	4,3	3,5	55	3/ 7/ 66	30	KON/FZ	10		**190566** ●
Holz-Her	180	4,3	3,5	30	2/10/ 60	30	KON/FZ	10		**190567** ●
Homag	180	4,3	3,5	45		30	KON/FZ	10		**190568** ●
Homag	180	4,7	3,5	45		30	KON/FZ	10		**190569** ●
Schelling	200	4,3	3,5	20	2/11/66	30	KON/FZ	10		**190570** ●
	200	4,3	3,5	30	2/10/ 60	30	KON/FZ	10		**190571** ●
Homag	200	4,3	3,5	45		30	KON/FZ	10		**190572** ●
	200	4,3	3,5	80		30	KON/FZ	10		**190616** □
Selco	200	4,3	3,5	65	2/9/100 2/9/110 2/14/110	30	KON/FZ	10		**190615** ●
Homag	200	4,7	3,5	45		30	KON/FZ	10		**190573** ●
Selco	200	4,7	3,5	65	2/9/110 2/9/100	30	KON/FZ	10		**190574** ●
Homag	220	3,1	2,4	45		48	KON/FZ	10		**190744** ●
Schelling	300	4,3	3,5	30	2/11/73 2/13/94	48	KON/FZ	10		**190743** ●

● available ex stock
□ available at short notice
Instruction manual visit www.leitz.org









HW

Scoring sawblade - softforming / postforming

Application:
For scoring with feed at high feed rates and deep cutting depths.

Machine:
Panel sizing saws with adjustable soft and postforming units and pressure beam.

Workpiece material:
Chipboard and fibre materials paper and plastic coated.

Technical information:
Dimension and tooth shape according to machine manufacturers‘ specification.

Circular sawblade FZ/TR
WK 852 2

Machine	D mm	SB mm	TDI mm	BO mm	NLA mm	Z	ZF	SW °	n_{max} min^{-1}	WSS	ID
	220	3,35	2,5	30		48	FZ/TR	10	10400	■	**165676** ●
	250	4,55	3,2	30	2/10/60	48	FZ/TR	10	9100	■	**165677** ●
Holz-Her	280	4,55	3,2	30	2/10/60	60	FZ/TR	10	8100	■	**165678** ●
Homag	350	4,55	3,2	75		72	FZ/TR	10	6500	■	**165679** ●
	450	4,8	3,5	30	2/10/60	72	FZ/TR	10	4200	■	**165680** ●

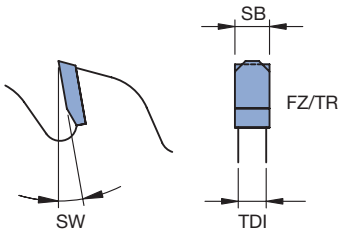

Circular sawblade WZFA
WK 251 2, WK 851 2

Machine	D mm	SB mm	TDI mm	BO mm	NLA mm	Z	ZF	SW °	n_{max} min^{-1}	WSS	ID
	180	4,55	3,2	30		36	WZFA	10	12700	■	**165681** ●
Schelling	300	4,55	3,2	30	2/11/73 2/13/94	72	WZFA	10	7600	■	**165682** ●
Selco	300	4,55	3,2	65	2/9/110	72	WZFA	10	7600	■	**165683** ●

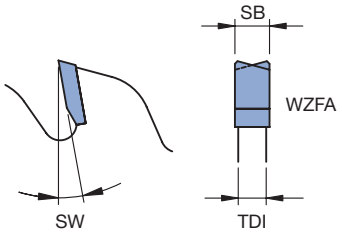

Circular sawblade WZ
WK 850 2

Machine	D mm	SB mm	TDI mm	BO mm	NLA mm	Z	ZF	SW °	n_{max} min^{-1}	WSS	ID
Homag	280	4,55	3,2	45		84	WZ	10	8100	■	**165684** ●

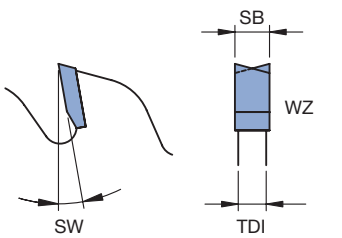

Machine-Typ	Tool Type	ABM mm	Z	QAL	ZF	System	ID
Gabbiani- P60	Main sawblade	300x4.4x80	60	HW	TR/TR	RazorCut PLUS	**161142** ●
	Main sawblade	300x4,4x80	60	HW	FZ/TR		**163456** ●
	Scoring sawblade	200x4.4x80	36	HW	KON/FZ		**165637** ●
Gabbiani- P80	Main sawblade	340x4,4x80	72	HW	TR/TR	RazorCut	**163378** ●
	Main sawblade	340x4.4x80	72	HW	TR/TR	RazorCut PLUS	**161148** ●
	Main sawblade	340x4,4x80	72	HW	FZ/TR		**163458** ●
	Scoring sawblade	200x4.4x80	36	HW	KON/FZ		**165637** ●
Gabbiani- G2 115	Main sawblade	400x4.4x80	72	HW	TR/TR	RazorCut PLUS	**161163** ●
	Main sawblade	400x4.4x80	72	HW	FZ/TR		**163455** ●
	Scoring sawblade	200x4.4x80	36	HW	KON/FZ		**165637** ●
Gabbiani- G2 130	Main sawblade	430x4.4x80	72	HW	TR/TR	RazorCut PLUS	**161167** ●
	Main sawblade	430x4.4x80	72	HW	FZ/TR		**163429** ●
	Scoring sawblade	200x4.4x80	36	HW	KON/FZ		**165637** ●
Gabbiani- S95	Main sawblade	380x4.4x80	72	HW	TR/TR	RazorCut PLUS	**161160** ●
	Main sawblade	380x4,4x80	72	HW	FZ/TR		**163459** ●
	Scoring sawblade	160x4.4x55	36	HW	KON/WZ		**165562** ●
	Scoring sawblade	160x4.3/5.1x55	30	DP	KON/FZ		**190566** ●
Gabbiani- S115	Main sawblade	400x4.4x80	72	HW	TR/TR	RazorCut PLUS	**161163** ●
	Main sawblade	400x4.4x80	72	HW	FZ/TR		**163455** ●
	Scoring sawblade	160x4.4x55	36	HW	KON/WZ		**165562** ●
	Scoring sawblade	160x4.3/5.1x55	30	DP	KON/FZ		**190566** ●
Holz-Her- Tectra 6120 Classic	Main sawblade	350x4.4x30	54	HW	WZ		**163301** ●
	Main sawblade	350x4.4x30	72	HW	WZ		**163302** ●
	Main sawblade	350x4.4x30	72	HW	FZ/TR		**163408** ●
	Main sawblade	350x4.4x30	72	HW	TR/TR	RazorCut	**163379** ●
	Main sawblade	350x4.4x30	72	HW	TR/TR	RazorCut PLUS	**161149** ●
	Main sawblade	350x4.4x30	72	DP	TR/TR		**190707** ●
	Scoring sawblade	180x4.4x30	30	HW	KON/FZ		**165632** ●
	Scoring sawblade	180x4.3/5.1x30	30	DP	KON/FZ		**190567** ●
Holz-Her- Tectra 6120 Dynamic, Lift, Power	Main sawblade	380x4.4x30	72	HW	TR/TR	RazorCut	**163383** ●
	Scoring sawblade	180x4.4x30	30	HW	KON/FZ		**165632** ●
	Scoring sawblade	180x4.3/5.1x30	30	DP	KON/FZ		**190567** ●
Holz-Her- Zentrex 6220 Classic	Main sawblade	380x4.4x30	72	HW	TR/TR	RazorCut	**163383** ●
	Scoring sawblade	180x4.4x30	30	HW	KON/FZ		**165632** ●
	Scoring sawblade	180x4.3/5.1x30	30	DP	KON/FZ		**190567** ●
Holz-Her- Zentrex 6220 Dynamic, Lift, Power	Main sawblade	430x4.4x30	72	HW	WZ		**163310** ●
	Main sawblade	430x4.4x30	72	HW	FZ/TR		**163427** ●
	Main sawblade	400x4.4x80	72	HW	TR/TR	RazorCut PLUS	**161163** ●
	Scoring sawblade	180x4.4x30	30	HW	KON/FZ		**165632** ●
	Scoring sawblade	180x4.3/5.1x30	30	DP	KON/FZ		**190567** ●
Homag- HKL300	Main sawblade	350x4.4x60	72	HW	WZ		**163304** ●
	Main sawblade	350x4.4x60	72	HW	FZ/TR		**163409** ●
	Main sawblade	350x4.4x60	72	HW	TR/TR	RazorCut	**163380** ●
	Main sawblade	350x4.4x60	72	HW	TR/TR	RazorCut PLUS	**161150** ●
	Main sawblade	350x4.4x60	72	DP	TR/TR		**190708** ●
	Scoring sawblade	180x4.4x45	30	HW	KON/WZ		**165565** ●
	Scoring sawblade	180x4.4x45	36	HW	KON/WZ		**165566** ●
	Scoring sawblade	180x4.4x45	36	HW	KON/FZ		**165633** ●
	Scoring sawblade	180x4.3/5.1x45	30	DP	KON/FZ		**190568** ●
Homag- HKL600	Main sawblade	600x5.8x60	60	HW	FZ/TR		**163446** ●
	Main sawblade	600x5.8x60	72	HW	FZ/TR		**163447** ●
	Scoring sawblade	200x5.8x45	36	HW	KON/WZ		**165575** ●
Homag- HPP130	Main sawblade	300x4.4x60	72	HW	FZ/TR		**163401** ●
	Main sawblade	300x4.4x60	72	HW	TR/TR	RazorCut PLUS	**161140** ●
	Main sawblade	300x4.4x60	72	HW	TR/TR	RazorCut	**163371** ●
	Scoring sawblade	150x4.4x45	24	HW	KON/WZ		**165557** ●
	Scoring sawblade	150x4.4x45	28	HW	KON/WZ		**165558** ●

● available ex stock
□ available at short notice
Instruction manual visit www.leitz.org

Machine-Typ	Tool Type	ABM mm	Z	QAL	ZF	System	ID
Homag- HPP200	Main sawblade	350x4.4x60	72	HW	WZ		**163304** ●
	Main sawblade	350x4.4x60	72	HW	FZ/TR		**163409** ●
	Main sawblade	350x4.4x60	72	HW	TR/TR	RazorCut	**163380** ●
	Main sawblade	350x4.4x60	72	HW	TR/TR	RazorCut PLUS	**161150** ●
	Main sawblade	350x4.4x60	72	DP	TR/TR		**190708** ●
	Scoring sawblade	200x4.4x45	36	HW	KON/WZ		**165574** ●
	Scoring sawblade	200x4.3/5.1x45	30	DP	KON/FZ		**190572** ●
Homag- HPP300, HPL300, HKL300	Main sawblade	380x4.8x60	54	HW	WZ		**163307** ●
	Main sawblade	380x4.4x60	72	HW	FZ/TR		**163418** ●
	Main sawblade	380x4.8x60	72	HW	FZ/TR		**163419** ●
	Main sawblade	380x4.4x60	72	HW	TR/TR	RazorCut PLUS	**161158** ●
	Main sawblade	380x4.8x60	72	HW	TR/TR	RazorCut PLUS	**161159** ●
	Main sawblade	380x4.4x60	72	HW	TR/TR	RazorCut	**163384** ●
	Main sawblade	380x4.8x60	72	HW	TR/TR	RazorCut	**163385** ●
	Scoring sawblade	180x4.4x45	30	HW	KON/WZ		**165565** ●
	Scoring sawblade	180x4.4x45	36	HW	KON/WZ		**165566** ●
	Scoring sawblade	180x4.4x45	36	HW	KON/FZ		**165633** ●
	Scoring sawblade	180x4.8x45	36	HW	KON/FZ		**165634** ●
	Scoring sawblade	180x4.3/5.1x45	30	DP	KON/FZ		**190568** ●
	Scoring sawblade	180x4.7/5.5x45	30	DP	KON/FZ		**190569** ●
Homag- HPP400	Main sawblade	450x4.8x60	72	HW	FZ/TR		**163431** ●
	Main sawblade	450x4.8x60	72	HW	TR/TR	RazorCut	**163390** ●
	Main sawblade	450x4.8x60	72	HW	TR/TR	RazorCut PLUS	**161169** ●
	Main sawblade	450x4.8x60	72	DP	TR/TR		**190712** ●
	Scoring sawblade	180x4.8x45	36	HW	KON/FZ		**165634** ●
	Scoring sawblade	180x4.7/5.5x45	30	DP	KON/FZ		**190569** ●
Mayer- kappa automatic 80	Main sawblade	300x4.4x30	60	HW	TR/TR	RazorCut	**163369** ●
	Main sawblade	300x4.4x30	60	HW	TR/TR	RazorCut PLUS	**161137** ●
	Main sawblade	320x4.4x30	60	HW	FZ/TR		**163406** ●
	Scoring sawblade	150x4.4x30	36	HW	KON/WZ		**165555** ●
	Scoring sawblade	150x4.4x30	24	HW	KON/WZ		**165556** ●
	Scoring sawblade	150x4.3/5.1x30	24	DP	KON/FZ		**190565** ●
Mayer- kappa automatic 100	Main sawblade	350x4.4x30	72	HW	TR/TR	RazorCut PLUS	**161149** ●
	Main sawblade	350x4.4x30	72	HW	TR/TR	RazorCut	**163379** ●
	Main sawblade	350x4.4x30	72	HW	FZ/TR		**163408** ●
	Main sawblade	355x4.4x30	72	HW	WZ		**163306** ●
	Scoring sawblade	150x4.4x30	36	HW	KON/WZ		**165555** ●
	Scoring sawblade	150x4.4x30	24	HW	KON/WZ		**165556** ●
	Scoring sawblade	150x4.3/5.1x30	24	DP	KON/FZ		**190565** ●
	Main sawblade	350x4.4x30	72	DP	TR/TR		**190707** ●
Mayer- kappa automatic 120	Main sawblade	400x4.4x30	72	HW	TR/TR	RazorCut PLUS	**161161** ●
	Main sawblade	400x4.4x30	72	HW	TR/TR	RazorCut	**163387** ●
	Main sawblade	400x4.4x30	72	HW	FZ/TR		**163421** ●
	Main sawblade	400x4.4x30	60	HW	WZ		**163308** ●
	Main sawblade	400x4.4x30	72	HW	WZ		**163309** ●
	Scoring sawblade	150x4.4x30	36	HW	KON/WZ		**165555** ●
	Scoring sawblade	150x4.4x30	24	HW	KON/WZ		**165556** ●
	Scoring sawblade	150x4.3/5.1x30	24	DP	KON/FZ		**190565** ●
	Main sawblade	400x4.4x30	72	DP	TR/TR		**190711** ●
Mayer- kappa automatic 140	Main sawblade	500x5.2x30	60	HW	FZ/TR		**163439** ●
	Main sawblade	500x5.2x30	60	HW	WZ		**163314** ●
	Scoring sawblade	150x4.4x30	36	HW	KON/WZ		**165555** ●
	Scoring sawblade	150x4.4x30	24	HW	KON/WZ		**165556** ●
	Scoring sawblade	150x4.3/5.1x30	24	DP	KON/FZ		**190565** ●
Schelling- ASH	Main sawblade	720x6.5x40	60	HW	FZ/TR		**163451** ●
	Scoring sawblade	220x6.5x20	36	HW	KON/WZ		**165579** ●
Schelling- fh3	Main sawblade	300x4.4x30	48	HW	WZ		**163300** ●
	Main sawblade	300x4.4x30	60	HW	FZ/TR		**163400** ●
	Main sawblade	300x4.4x30	60	HW	TR/TR	RazorCut PLUS	**161137** ●
	Main sawblade	300x4.4x30	60	HW	TR/TR	RazorCut	**163369** ●
	Scoring sawblade	180x4.4x30	30	HW	KON/FZ		**165632** ●
	Scoring sawblade	180x4.3/5.1x30	30	DP	KON/FZ		**190567** ●

■ Solid wood
■ Board, coated
■ Board, uncoated
■ Non-ferrous metals
■ Plastics
■ Mineral materials
■ Composites
■ Steel, thin-walled

Machine-Typ	Tool Type	ABM mm	Z	QAL	ZF	System	ID
Schelling- fh3 Plus package	Main sawblade	350x4.4x30	54	HW	WZ		**163301** ●
	Main sawblade	350x4.4x30	72	HW	WZ		**163302** ●
	Main sawblade	350x4.4x30	72	HW	FZ/TR		**163408** ●
	Main sawblade	350x4.4x30	72	HW	TR/TR	RazorCut	**163379** ●
	Main sawblade	350x4.4x30	72	HW	TR/TR	RazorCut PLUS	**161149** ●
	Main sawblade	350x4.4x30	72	DP	TR/TR		**190707** ●
	Scoring sawblade	180x4.4x30	30	HW	KON/FZ		**165632** ●
	Scoring sawblade	180x4.3/5.1x30	30	DP	KON/FZ		**190567** ●
Schelling- fh4 (former version)	Main sawblade	350x4.4x30	54	HW	WZ		**163301** ●
	Main sawblade	350x4.4x30	72	HW	WZ		**163302** ●
	Main sawblade	350x4.4x30	72	HW	FZ/TR		**163408** ●
	Main sawblade	350x4.4x30	72	HW	TR/TR	RazorCut	**163379** ●
	Main sawblade	350x4.4x30	72	HW	TR/TR	RazorCut PLUS	**161149** ●
	Main sawblade	350x4.4x30	72	DP	TR/TR		**190707** ●
	Scoring sawblade	300x4.4x30	48	HW	KON/WZ		**165582** ●
Schelling- fh4 (new version)	Main sawblade	360x4.4x30	72	HW	FZ/TR		**163414** ●
	Main sawblade	360x4.4x30	72	HW	TR/TR	RazorCut PLUS	**161154** ●
	Main sawblade	360x4.4x30	72	HW	TR/TR	RazorCut	**163382** ●
	Scoring sawblade	200x4.4x20	36	HW	KON/WZ		**165569** ●
	Scoring sawblade	200x4.3/5.1x20	30	DP	KON/FZ		**190570** ●
Schelling- fh5	Main sawblade	400x4.4x30	60	HW	WZ		**163308** ●
	Main sawblade	400x4.4x30	72	HW	WZ		**163309** ●
	Main sawblade	400x4.4x30	72	HW	FZ/TR		**163421** ●
	Main sawblade	400x4.4x30	72	HW	TR/TR	RazorCut	**163387** ●
	Main sawblade	400x4.4x30	72	HW	TR/TR	RazorCut PLUS	**161161** ●
	Main sawblade	400x4.4x30	72	DP	TR/TR		**190711** ●
	Scoring sawblade	200x4.4x20	36	HW	KON/WZ		**165569** ●
	Scoring sawblade	200x4.3/5.1x20	30	DP	KON/FZ		**190570** ●
Schelling- fh6	Main sawblade	460x4.4x30	72	HW	FZ/TR		**163434** ●
	Main sawblade	460x4.4x30	72	HW	TR/TR	RazorCut	**163391** ●
	Main sawblade	460x4.4x30	72	HW	TR/TR	RazorCut PLUS	**161170** ●
	Scoring sawblade	200x4.4x20	36	HW	KON/WZ		**165569** ●
	Scoring sawblade	200x4.3/5.1x20	30	DP	KON/FZ		**190570** ●
Schelling- fh8, fm8	Main sawblade	520x4.4x30	72	HW	WZ		**163316** ●
	Main sawblade	520x4.4x30	72	HW	FZ/TR		**163442** ●
	Scoring sawblade	200x4.4x20	36	HW	KON/WZ		**165569** ●
	Scoring sawblade	200x4.8x20	36	HW	KON/WZ		**165573** ●
	Scoring sawblade	200x4.3/5.1x20	30	DP	KON/FZ		**190570** ●
Schelling- FSM	Main sawblade	720x6.5x40	60	HW	FZ/TR		**163451** ●
Schelling- FTM Option	Main sawblade	680x6.2x40	60	HW	FZ/TR		**163449** ●
	Scoring sawblade	220x6.5x20	36	HW	KON/WZ		**165579** ●
Schelling- s45	Main sawblade	350x4.4x30	54	HW	WZ		**163301** ●
	Main sawblade	350x4.4x30	72	HW	WZ		**163302** ●
	Main sawblade	350x4.4x30	72	HW	FZ/TR		**163408** ●
	Main sawblade	350x4.4x30	72	HW	TR/TR	RazorCut	**163379** ●
	Main sawblade	350x4.4x30	72	HW	TR/TR	RazorCut PLUS	**161149** ●
	Main sawblade	350x4.4x30	72	DP	TR/TR		**190707** ●
	Scoring sawblade	180x4.4x30	30	HW	KON/FZ		**165632** ●
	Scoring sawblade	180x4.3/5.1x30	30	DP	KON/FZ		**190567** ●
Schelling- s45 Plus package	Main sawblade	400x4.4x30	60	HW	WZ		**163308** ●
	Main sawblade	400x4.4x30	72	HW	WZ		**163309** ●
	Main sawblade	400x4.4x30	72	HW	FZ/TR		**163421** ●
	Main sawblade	400x4.4x30	72	HW	TR/TR	RazorCut	**163387** ●
	Main sawblade	400x4.4x30	72	HW	TR/TR	RazorCut PLUS	**161161** ●
	Main sawblade	400x4.4x30	72	DP	TR/TR		**190711** ●
	Scoring sawblade	180x4.4x30	30	HW	KON/FZ		**165632** ●
	Scoring sawblade	180x4.3/5.1x30	30	DP	KON/FZ		**190567** ●

● available ex stock
□ available at short notice
Instruction manual visit www.leitz.org

Machine-Typ	Tool Type	ABM mm	Z	QAL	ZF	System	ID
Selco- EB 100	Main sawblade	360x4.4x65	72	HW	FZ/TR		**163415** ●
	Scoring sawblade	200x4.4x65	36	HW	KON/WZ		**165576** ●
	Scoring sawblade	200x4.3/5.1x65	30	DP	KON/FZ		**190615** ●
Selco- EB 70 (kit 80), EB 75, EB 80	Main sawblade	320x4.4x65	60	HW	TR/TR	RazorCut PLUS	**161146** ●
	Main sawblade	350x4.4x30	72	HW	TR/TR	RazorCut	**163379** ●
	Main sawblade	320x4.4x65	60	HW	FZ/TR		**163407** ●
	Scoring sawblade	200x4.4x65	36	HW	KON/WZ		**165576** ●
	Scoring sawblade	200x4.3/5.1x65	30	DP	KON/FZ		**190615** ●
Selco- EB 70 (L)	Main sawblade	300x4.4x65	60	HW	FZ/TR		**163402** ●
	Main sawblade	300x4.4x65	60	HW	TR/TR	RazorCut	**163372** ●
	Main sawblade	300x4.4x65	60	HW	TR/TR	RazorCut PLUS	**161141** ●
	Scoring sawblade	200x4.4x65	36	HW	KON/WZ		**165576** ●
	Scoring sawblade	200x4.3/5.1x65	30	DP	KON/FZ		**190615** ●
Selco- EB 90	Main sawblade	355x4.4x80	72	HW	TR/TR	RazorCut PLUS	**161153** ●
	Scoring sawblade	200x4.4x65	36	HW	KON/WZ		**165576** ●
	Scoring sawblade	200x4.3/5.1x65	30	DP	KON/FZ		**190615** ●
Selco- EB 95	Main sawblade	355x4.4x65	72	HW	FZ/TR		**163412** ●
	Main sawblade	355x4,4x65	72	HW	TR/TR	RazorCut	**163381** ●
	Main sawblade	355x4.4x65	72	HW	TR/TR	RazorCut PLUS	**161152** ●
	Scoring sawblade	200x4.4x65	36	HW	KON/WZ		**165576** ●
	Scoring sawblade	200x4.3/5.1x65	30	DP	KON/FZ		**190615** ●
Selco- EB 110, EB 108, EB 120, WN 125, WN 200, WN 600/132, WN 512, WN 600/145, WN 600/162	Main sawblade	400x4.4x80	72	HW	TR/TR	RazorCut PLUS	**161163** ●
	Scoring sawblade	200x4.4x65	36	HW	KON/WZ		**165576** ●
	Scoring sawblade	200x4.3/5.1x65	30	DP	KON/FZ		**190615** ●
Selco- EB 120, WN 125	Main sawblade	430x4.4x80	72	HW	TR/TR	RazorCut PLUS	**161167** ●
	Main sawblade	430x4.4x80	72	HW	FZ/TR		**163429** ●
	Scoring sawblade	200x4.4x65	36	HW	KON/WZ		**165576** ●
	Scoring sawblade	200x4.3/5.1x65	30	DP	KON/FZ		**190615** ●
Selco- WN 600/132, WN 200	Main sawblade	450x4.8x80	72	HW	FZ/TR		**163433** ●
	Scoring sawblade	200x4.8x65	36	HW	KON/WZ		**165577** ●
	Scoring sawblade	200x4,7/5,5x65	30	DP	KON/FZ		**190574** ●
Selco- WN 600/145, WN 512	Main sawblade	480x4.8x80	72	HW	FZ/TR		**163438** ●
	Scoring sawblade	200x4.8x65	36	HW	KON/WZ		**165577** ●
	Scoring sawblade	200x4,7/5,5x65	30	DP	KON/FZ		**190574** ●



Middle cuts

Application:
For cutting of panels along grain for floor production.

Machine:
Multi blade saws.

Workpiece material:
Chipboard and fibre materials paper and plastic coated, veneered.

Technical information:
DP tipping for long tool life. Circular sawblades BO = 115 mm for Hydro-Duo sleeve ID **030555** or BO = 110 mm for clamping flange TR 810 0. Tip height 5.5 mm. Tool body coated for higher running performance.




DP

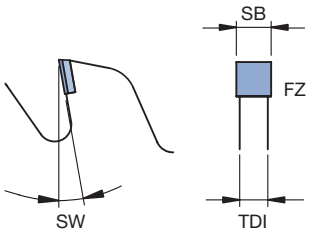

Circular sawblade DP tipped
WK 800 2

Machine	D mm	SB mm	TDI mm	BO mm	NLA mm	DKN mm	Z	ZF	SW °	WSS	ID
Paul	210	2,2	1,6	100	4/7/120	13/109	36	FZ	3	■■	**190676** □
Paul	210	2,2	1,6	115	8/7/131		36	FZ	3	■■	**190677** □
Homag	250	2,0	1,6	100	3/18/150		48	FZ	3	■■	**190678** □
Paul	250	2,0	1,6	100	4/7/140	13/109	48	FZ	3	■■	**190679** □
Paul	250	2,0	1,6	115	8/7/131		48	FZ	3	■■	**190680** □
Homag	250	2,2	1,6	100	3/18/150		36	FZ	3	■■	**190681** □
Paul	250	2,2	1,6	100	4/7/140	13/109	36	FZ	3	■■	**190682** □
Homag	250	2,2	1,6	100	3/18/150		48	FZ	3	■■	**190684** □
Paul	250	2,2	1,6	100	4/7/140	13/109	48	FZ	3	■■	**190685** □
Paul	250	2,2	1,6	115	8/7/131		36	FZ	3	■■	**190683** □
Paul	250	2,2	1,6	115	8/7/131		48	FZ	3	■■	**190686** □

HW

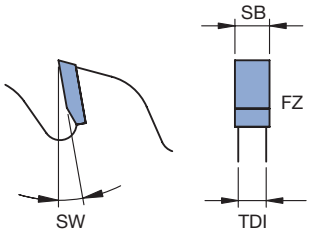

Circular sawblade TC tipped
WK 800 2

D mm	SB mm	TDI mm	BO mm	NLA mm	DKN mm	Z	ZF	SW °	WSS	ID
250	3,2	2,2	100	4/7/140	13/109	48	FZ	10	■■	**061434** ●

● available ex stock
□ available at short notice
Instruction manual visit www.leitz.org

Working process	For splitting, mitre cutting and sizing. Spray lubrication recommended when machining non-ferrous metal profiles.
Workpiece materials	Non-ferrous and plastic profiles, composites, insulating material and aluminium compound materials.
Machines	Splitting, trimming, mitre joint, double cross cutting and sizing machines.
Application	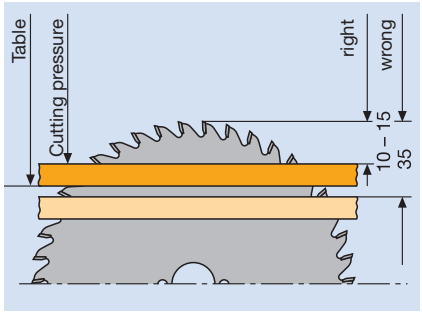 Positive cutting angle: The positive cutting angle presses the workpiece onto the table. For circular sawblades with the tooth shape FZ/TR and the spindle below the workpiece for cross and mitre cutting with material thickness > 2.5 mm. 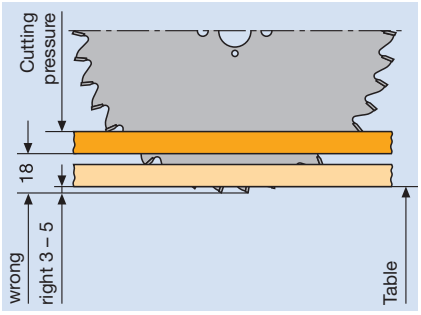 Negative cutting angle: The negative cutting angle presses the workpiece onto the table. For circular sawblades with the tooth shape FZ/TR and the spindle above the workpieces for cross and mitre cutting with material thickness < 2.5 mm.
Tooth shape	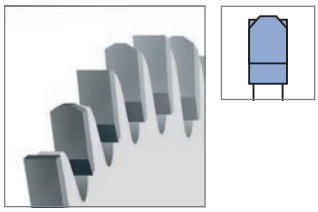 FZ/TR (square/trapezoidal teeth): Tooth shape for non-ferrous metals and plastic profiles and boards. 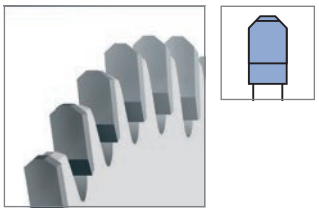 TR/TR (trapezoidal/trapezoidal teeth): Tooth shape for better cutting quality with non-ferrous and plastic profiles. If altered from the standard FZ/TR shape.







HW

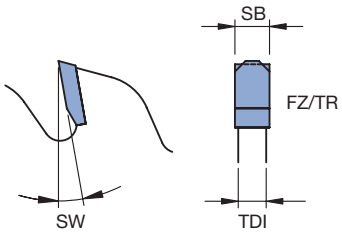

Cross and mitre cuts

Application:
For trimming and mitre cuts - positioning of sawblade under the workpiece.

Machine:
Cross, trimming, mitre and radial saws as well as double mitre cutting saws and CNC machining centres.

Workpiece material:
Non-ferrous metal or plastic profiles.

Technical information:
Spray lubrication recommended when processing non-ferrous metal profiles.

Circular sawblade FZ/TR cutting angle 5°
WK 452 2

Machine	D mm	SB mm	TDI mm	BO mm	NLA mm	Z	ZF	SW °	WSS	ID
Elumatec	280	3,2	2,6	32		96	FZ/TR	5		**165725** ●
	300	3,2	2,6	30	KNL	72	FZ/TR	5		**165726** ●
	300	3,2	2,6	30	KNL	96	FZ/TR	5		**165727** ●
Rapid	320	3,2	2,6	30	KNL	84	FZ/TR	5		**165728** ●
	350	3,4	2,8	30	KNL	84	FZ/TR	5		**165729** ●
Rapid	350	3,2	2,6	30	KNL	108	FZ/TR	5		**165730** ●
Emmegi	350	3,2	2,6	32	2/11/63 KNL	84	FZ/TR	5		**165731** ●
Rapid	370	3,8	3,2	30	KNL	96	FZ/TR	5		**165732** ●
Rapid	400	3,8	3,2	30	KNL	96	FZ/TR	5		**165733** ●
Emmegi	400	3,8	3,2	32	2/11/63	96	FZ/TR	5		**165734** □
Kaltenbach	400	3,8	3,2	50	4/15/80	96	FZ/TR	5		**165735** □
Rapid, Elumatec	420	3,8	3,2	30	KNL	96	FZ/TR	5		**165736** ●
	430	3,5	2,8	30	KNL	96	FZ/TR	5		**165737** ●
	450	3,8	3,2	30	2/11/63 KNL	110	FZ/TR	5		**165738** ●
Emmegi	450	3,8	3,2	32	2/11/63 KNL	96	FZ/TR	5		**165739** ●
Rapid, Elumatec	500	4,4	3,8	30	KNL	120	FZ/TR	5		**165740** ●
Emmegi	500	4,0	3,4	32	2/11/63	96	FZ/TR	5		**165741** ●
Emmegi	500	4,0	3,4	32	2/11/63	120	FZ/TR	5		**165742** ●
Elumatec	500	4,4	3,8	32	2/6/75 6/9,2-17,2/75	120	FZ/TR	5		**165743** ●
Emmegi	550	4,0	3,4	32	2/11/63	96	FZ/TR	5		**165744** ●
Emmegi	550	4,0	3,4	32	2/11/63	126	FZ/TR	5		**165745** ●
Elumatec	550	4,4	3,8	30	KNL	120	FZ/TR	5		**165746** ●
Stegmaier	600	4,6	4,0	30	2/11/63	140	FZ/TR	5		**165747** ●
	600	5,0	4,4	32	2/11/63	132	FZ/TR	5		**165748** ●
	650	5,0	4,4	30	2/11/63	144	FZ/TR	5		**165749** ●

● available ex stock
□ available at short notice
Instruction manual visit www.leitz.org







HW

Low Noise

Cross and mitre cuts *Excellent*

Application:
For trimming and mitre cuts - positioning of sawblade under the workpiece.

Machine:
Cross, trimming, mitre and radial saws as well as double mitre cutting saws and CNC machining centres.

Workpiece material:
Non-ferrous metal or plastic profiles.

Technical information:
Spray lubrication is recommended when machining non-ferrous metal profiles. **Excellent** version. Vibration damping composite construction of the tool body by steel foil. Extreme noise reduction even with increasing dulling of the tool.

Circular sawblade FZ/TR cutting angle 5°
WK 472 2

D	SB	TDI	BO	NLA	Z	ZF	SW	Foil	WSS	ID
mm	mm	mm	mm	mm			°			
300	3,2	2,6	30	KNL	96	FZ/TR	5	left	■■	**161360** ●
300	3,2	2,6	30	KNL	96	FZ/TR	5	right	■■	**161361** ●
350	3,2	2,6	30	KNL	108	FZ/TR	5	left	■■	**161362** ●
350	3,2	2,6	30	KNL	108	FZ/TR	5	right	■■	**161363** ●

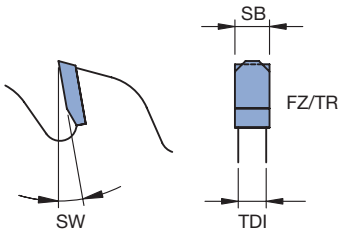

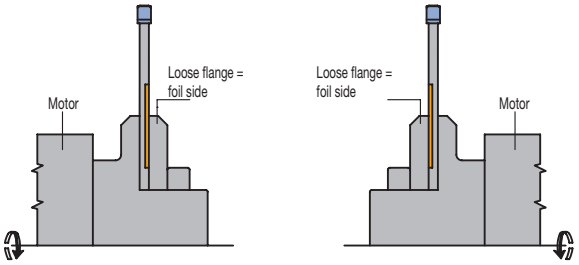







HW

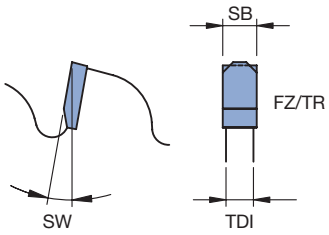

Crossing and mitre cuts with negative cutting angle

Application:
For trimming and mitre cuts - positioning of workpiece under the sawblade.

Machine:
Cross, trimming, mitre and radial saws as well as double mitre cutting saws and CNC machining centres.

Workpiece material:
Non-ferrous metal or plastic profiles.

Technical information:
Spray lubrication is recommended when machining non-ferrous metal profiles. Because of the negative cutting angle, it is particularly suitable for profiles where hooking and deformation of the profiles should be avoided. Particularly suitable for cutting from above. Negative cutting angle for improved workpiece clamping.

Circular sawblade FZ/TR cutting angle -5°
WK 462 2

Machine	D mm	SB mm	TDI mm	BO mm	NLA mm	Z	ZF	SW °	WSS	ID
	300	3,2	2,6	30	KNL	72	FZ/TR	-5		**165825** ●
Elektra Beckum, Elu, DeWalt, Fezer, Lurem, Rapid, Ulmia, Scheppach	300	3,2	2,6	30	KNL	96	FZ/TR	-5		**165826** ●
Fezer, Rapid, Ulmia	300	3,2	2,6	30	KNL	120	FZ/TR	-5		**165827** ●
	300	3,2	2,6	32	KNL	72	FZ/TR	-5		**165828** □
	300	3,2	2,6	32	KNL	96	FZ/TR	-5		**165829** □
	300	3,2	2,6	32	KNL	120	FZ/TR	-5		**165830** □
Haffner	330	3,2	2,6	30	KNL	96	FZ/TR	-5		**165831** ●
	330	3,2	2,6	32	KNL	96	FZ/TR	-5		**165832** □
Haffner	350	3,4	2,8	30	KNL	84	FZ/TR	-5		**165833** ●
	350	3,8	3,2	30	KNL	84	FZ/TR	-5		**165834** ●
	350	3,8	3,2	32	KNL	84	FZ/TR	-5		**165835** □
	350	3,8	3,2	40	2/10/55 2/11/63 KNL	84	FZ/TR	-5		**165836** □
Haffner, Ulmia	350	3,2	2,6	30	KNL	108	FZ/TR	-5		**165837** ●
Eisele, Graule	350	3,6	3,0	40	2/9/55 4/12/64	108	FZ/TR	-5		**165838** ●
Elumatec	380	3,8	3,2	32		108	FZ/TR	-5		**165839** ●
	400	3,8	3,2	30	KNL	96	FZ/TR	-5		**165840** ●
	400	3,8	3,2	32	2/11/63	96	FZ/TR	-5		**165841** ●
Eisele	400	3,8	3,2	40	2/12/80 4/12/64	96	FZ/TR	-5		**165842** □
Kaltenbach	400	3,8	3,2	50	4/15/80	96	FZ/TR	-5		**165843** □
Elumatec, Rapid, Haffner, Wegoma, Ulmia	420	3,8	3,2	30	KNL	108	FZ/TR	-5		**165844** ●
Graule	420	3,8	3,2	40		108	FZ/TR	-5		**165845** □
Rapid	450	3,8	3,2	30	KNL	108	FZ/TR	-5		**165846** ●
Pressta Eisele	450	3,8	3,2	32	2/11/63 KNL	108	FZ/TR	-5		**165847** ●
Elu, Wegoma, Rapid	500	4,4	3,8	30	2/11/63 6/9/100	120	FZ/TR	-5		**165848** ●
Graule	520	4,4	3,8	50		120	FZ/TR	-5		**165849** ●
Rapid	550	4,0	3,4	30	KNL	132	FZ/TR	-5		**165850** ●
	550	4,0	3,4	32	2/11/63	132	FZ/TR	-5		**165851** □
Stürtz	600	5,2	4,6	30	KNL	138	FZ/TR	-5		**165852** ●

● available ex stock
□ available at short notice
Instruction manual visit www.leitz.org







HW

Low Noise

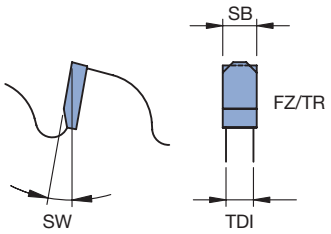

Crossing and mitre cuts with negative cutting angle
Excellent

Application:
For trimming and mitre cuts - positioning of workpiece under the sawblade.

Machine:
Cross, trimming, mitre and radial saws as well as double mitre cutting saws and CNC machining centres.

Workpiece material:
Non-ferrous metal or plastic profiles.

Technical information:
Spray lubrication is recommended when machining profiles made of non-ferrous metal. Negative cutting angle makes it particularly suitable for profiles where hooking and deformation of the profiles are to be avoided. Particularly suitable for cutting from above. Negative rake angle for improved workpiece clamping. **Excellent** version. Vibration damping composite construction of the support body by steel foil. Extreme noise reduction even with increasing dulling of the tool.

Circular sawblade FZ/TR cutting angle -5°
WK 482 2

D mm	SB mm	TDI mm	BO mm	NLA mm	Z	ZF	SW °	Foil	WSS	ID
300	3,2	2,6	30	KNL	96	FZ/TR	-5	left	■■	**161380** ●
300	3,2	2,6	30	KNL	96	FZ/TR	-5	right	■■	**161381** ●
350	3,2	2,6	30	KNL	108	FZ/TR	-5	left	■■	**161382** ●
350	3,2	2,6	30	KNL	108	FZ/TR	-5	right	■■	**161383** ●

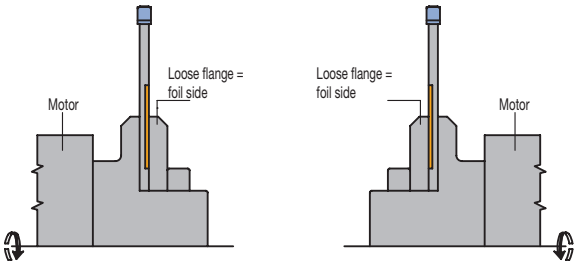







HW

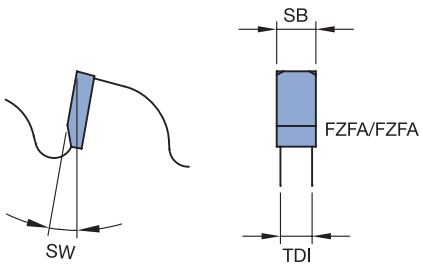

Cross and mitre cuts with reduced cutting width

Premium

Application:
For trimming and sizing.

Machine:
Cross, trimming, mitre and portable saws.

Workpiece material:
Thin walled, non-ferrous metal or plastic profiles, plastic honeycomb boards, fibre reinforced plastics (e.g. GFRP, CFRP), plastic wave boards (e.g. PVC).

Technical information:
Due to reduced cutting width and high number of teeth, especially suitable for thin-walled profiles (wall thickness < 2 mm) and thin panels. Negative cutting angle for smoother running. Special coating of the tool body for less adhesions.

Circular sawblade FZFA cutting angle -5°
WK 467 2

D mm	SB mm	TDI mm	BO mm	NLA mm	Z	ZF	SW °	WSS	ID
200	1,8	1,4	20	KNL	80	FZFA/FZFA	-5		**060274** ●
250	2,0	1,6	30	KNL	100	FZFA/FZFA	-5		**060275** ●
300	2,2	1,8	30	KNL	120	FZFA/FZFA	-5		**060276** ●
350	2,4	2,0	30	KNL	140	FZFA/FZFA	-5		**060279** ●

● available ex stock
□ available at short notice
Instruction manual visit www.leitz.org







HW



Cross and mitre cuts in finish cut quality *Excellent* - GlossCut

Application:
For trimming and mitre cutting.

Machine:
Cross, trimming, mitre and cross cutting twin saws.

Workpiece material:
Non-ferrous metal or plastic profiles, coated and lacquered.

Technical information:
Special design of the cutting area for low-groove and low-burr cutting areas and tear-free cutting edges. **Excellent** version with filled laser ornaments for vibration damping and reduction of noise levels.

Circular sawblade GlossCut
WK 377 2

D	SB	TDI	BO	NLA	Z	ZF	WSS	ID
mm	mm	mm	mm	mm				
300	3,0	2,4	30	KNL	72	FZFA/FZFA	■■	**161005** ●
300	3,0	2,4	30	KNL	96	FZFA/FZFA	■■	**161006** ●
350	3,5	2,8	30	KNL	96	FZFA/FZFA	■■	**161007** ●

Further GlossCut dimensions suitable for portable and semi-stationary machines - see section Portable Saws and Table-Top Machines.







DP

Cross and mitre cuts in finish cut quality *Excellent*

Application:
For trimming and mitre cutting.

Machine:
Cross, trimming, mitre and cross cutting twin saws.

Workpiece material:
Plastic profiles of windows with seals, plastic hollow wall profiles, fibre reinforced plastics.

Technical information:
Special tooth geometry for tear-free cutting edges on the entry and exit side as well as perfect, tear-free cutting of the rubber seal. DP tipping for long tool life even when used in fibre-reinforced profiles.

Circular sawblade HZFA cutting angle 5°, Diamaster PRO
WK 808 2 DP

D	SB	TDI	BO	NLA	Z	ZF	SW	WSS	ID
mm	mm	mm	mm	mm			°		
300	4,4	3,6	30	KNL	60	HRFA	5	■■	**190666** □
350	4,4	3,6	30	KNL	70	HRFA	5	■■	**190667** □
400	4,4	3,6	30	KNL	80	HRFA	5	■■	**762339** □
450	4,4	3,6	30	KNL	90	HRFA	5	■■	**190668** □
500	4,4	3,6	30	KNL	100	HRFA	5	■■	**762341** □
550	4,4	3,6	30	KNL	110	HRFA	5	■■	**762342** □
600	4,8	4,0	30	KNL	120	HRFA	5	■■	**762343** □









HW

Sizing in finish cut quality *Excellent* - BrillianceCut

Application:
For panel sizing of single boards and stacks of boards without scoring.

Machine:
Table and sizing saws, vertical panel sizing saws, panel sizing saws with pressure beam.

Workpiece material:
Transparent thermoplastics (e.g. PMMA, PC), solid surface materials (e.g. Corian).

Technical information:
Special tooth geometry for very smooth cutting surfaces and tear-free cutting edges. Recommended sawblade projection 5 - 10 mm. **Excellent** version with filled laser ornaments for vibration damping and reduction of noise level. Version with positive cutting angle.

Circular sawblade BrillianceCut
WK 371 2

Machine	D mm	SB mm	TDI mm	BO mm	NLA mm	Z	ZF	WSS	ID
	303	3,5	2,5	30	KNL	60	TR/TR		**161028** ●
Holz-Her, Mayer, Schelling	350	4,4	3,2	30	2/13/94 KNL	72	WZ/FA		**161029** ●
Homag	350	4,4	3,2	60	2/14/100	72	WZ/FA		**161030** ●
Homag	380	4,8	3,5	60	2/14/100 2/14/125 2/19/120	84	WZ/FA		**161031** ●
Mayer, Schelling	400	4,4	3,2	30	2/13/94 KNL	72	WZ/FA		**161032** ●
Mayer, Schelling	450	4,4	3,2	30	2/13/94 KNL	72	WZ/FA		**161033** ●
Homag	450	4,8	3,5	60	2/14/125 2/19/120	72	WZ/FA		**161034** ●

● available ex stock
□ available at short notice
Instruction manual visit www.leitz.org



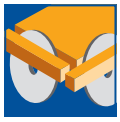







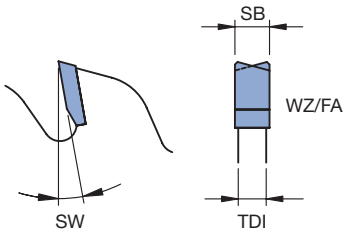

Number of teeth	Workpiece thickness
Low	> 30 mm
Medium	15 - 35 mm
High	< 20 mm

Sizing cut *Excellent* - PolyCut

Application:
For sizing and cross cutting without scoring.

Machine:
Table and sizing saws.

Workpiece material:
Thermoplastics such as polyamide (PA), polyethylene (PE), polystyrene (PS), polyvinyl chloride (PVC), polyoxymethylene (POM) and polycarbonate (PC) as well as polypropylene (PP) and polymethyl methacrylate (PMMA).

Technical information:
Optimized tooth shape and bevel geometry for universal use in various plastics with smooth cutting surfaces and chipping-free cutting edges. **Excellent** design with filled laser ornaments for vibration damping and noise reduction. The cutting angle and number of teeth must be selected depending on the material thickness to be processed.

Table and sizing saws
WK 371 2

D mm	SB mm	TDI mm	BO mm	NLA mm	Z	ZF	SW °	WSS	ID
300	3,2	2,2	30	KNL	48	WZFA	10	■	**161504** ●
300	3,2	2,2	30	KNL	72	WZFA	10	■	**161502** ●
300	3,2	2,2	30	KNL	96	WZFA	5	■	**161500** ●
350	3,5	2,5	30	KNL	56	WZFA	10	■	**161505** ●
350	3,5	2,5	30	KNL	84	WZFA	10	■	**161503** ●
350	3,5	2,5	30	KNL	108	WZFA	5	■	**161501** ●



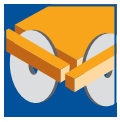



HW

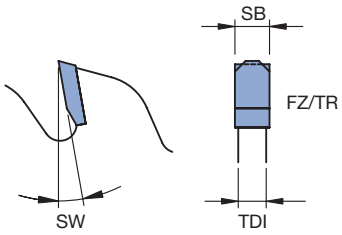

Sizing in easy melting plastics

Application:
For sizing and cross cutting without scoring.

Machine:
Table and sizing saws, vertical panel sizing saws, panel sizing saws with pressure beam.

Workpiece material:
Easy melting plastics (e.g. PP, PA).

Technical information:
Reduced number of teeth for lower heat generation as well as lower feed forces and lower power consumption even at large cutting depths. Tooth shape for cutting pitch and reduction of heat generation. Large chip spaces for optimum chip transport. Circular saw blade with suitable number of teeth must be selected depending on the material thickness. Low number of teeth for large workpiece thicknesses.

Circular sawblade FZ/TR, cutting angle 10°
WK 372 2

D mm	SB mm	TDI mm	BO mm	NLA mm	Z	ZF	SW °	WSS	ID
300	3,6	2,2	30	KNL	20	FZ/TR	10	■	**163500** ●
300	3,6	2,2	30	KNL	42	FZ/TR	10	■	**163501** ●
350	3,8	2,5	30	KNL	24	FZ/TR	10	■	**163502** ●
350	3,8	2,5	30	KNL	48	FZ/TR	10	■	**163503** ●
400	3,8	2,5	30	KNL	28	FZ/TR	10	■	**163504** ●
400	3,8	2,5	30	KNL	54	FZ/TR	10	■	**163505** ●

● available ex stock
□ available at short notice
Instruction manual visit www.leitz.org



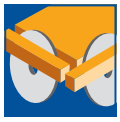



HW

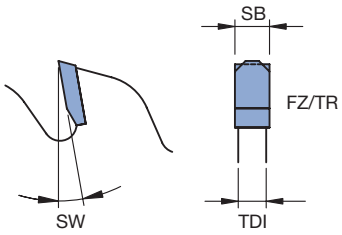

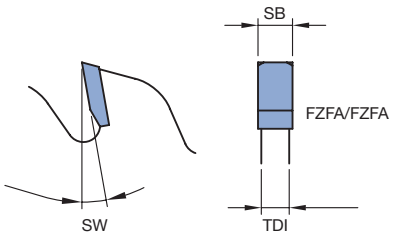

Sizing non-ferrous solid material

Application:
For panel sizing of single boards and stacks of boards without scoring.

Machine:
Panel sizing saws with pressure beam.

Workpiece material:
Solid non-ferrous metals (e.g. aluminium or brass panels).

Technical information:
Special cutting geometry for smooth cutting surfaces. Spray lubrication recommended. Reduced number of teeth and large gullet areas for higher feed speeds with the same power consumption.

Circular sawblade FZ/TR und FZFA/FZFA, cutting angle 10°
WK 452 2, WK 457 2, WK 472 2

Machine	D mm	SB mm	TDI mm	BO mm	NLA mm	Z	ZF	SW °	WSS	ID
Schelling	350	3,8	3,0	30	KNL 2/13/94	48	FZFA/FZFA	10		**165925** ●
Mayer	400	4,4	3,5	30	KNL	60	FZFA/FZFA	10		**165926** ●
Mayer, Schelling	450	4,4	3,5	30	KNL 2/13/94 2/13/114	60	FZ/TR	10		**165927** ●
Schelling	460	4,4	3,5	30	2/13/94 2/13/114	48	FZFA/FZFA	10		**165928** ●
Schelling	520	4,4	3,5	30	2/13/94 2/13/114	44	FZFA/FZFA	10		**165929** ●
Schelling	530	4,4	3,5	30	2/13/94 2/13/114	44	FZFA/FZFA	10		**165930** ●
Mayer	570	5,0	4,0	40	2/16/80	48	FZFA/FZFA	10		**165931** ●
Schelling	620	5,5	4,5	40	2/13/140 2/13/114	36	FZFA/FZFA	10		**165932** ●
Schelling	620	5,5	4,5	40	2/13/140 2/13/114	60	FZ/TR	10		**165933** ●
Schelling	680	5,5	4,5	40	2/13/140 2/13/114	42	FZFA/FZFA	10		**165934** ●







DP



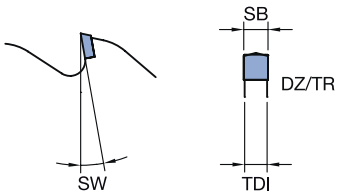

Sizing *Excellent*

Application:
For sizing of single boards.

Machine:
Table, sizing and vertical panel sizing saws.

Workpiece material:
Gypsum and cement fibre panels, duroplastics (compact laminated boards, e.g. HPL), fibre reinforced plastics (e.g. GFRP, CFRP), alu composite panels (e.g. Alucobond®). Chipboard and fibre materials plastic coated.

Technical information:
DP tipping and strong tooth shape for long tool life even in highly abrasive materials. **Excellent** design with filled laser ornaments for vibration damping and noise reduction. Tool body coated for higher running performance.

Circular sawblade DZ/TR, Diamaster PRO
WK 872 2

D mm	SB mm	TDI mm	BO mm	NLA mm	Z	ZF	SW °	WSS	ID
180	3,2	2,2	30		36	DZ/TR	10		**190747** ●
250	3,2	2,2	30	KNL	48	DZ/TR	10		**190748** ●
303	3,2	2,2	30	KNL	60	DZ/TR	10		**190673** ●
303	3,2	2,2	30	KNL	96	DZ/TR	10		**190674** ●
350	3,5	2,5	30	KNL	72	DZ/TR	10		**190749** ●

● available ex stock
□ available at short notice
Instruction manual visit www.leitz.org

Working process	For sizing, separating and trimming cut.
Workpiece materials	Solid wood, wood derived materials, plastics.
Machines	CNC machining centres and aggregates.
Tooth shape	  WZ/WZ/FZ (alternative/square teeth): Tooth shape for solid wood, glulam and coated or veneered wood derived materials; tear-free cutting edges and high cut quality. Combinations of tooth forms (WZri, WZle, WZri, WZle, FZ).





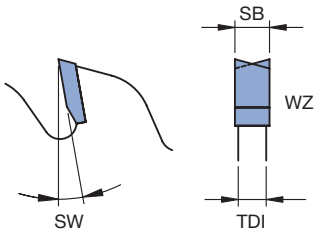

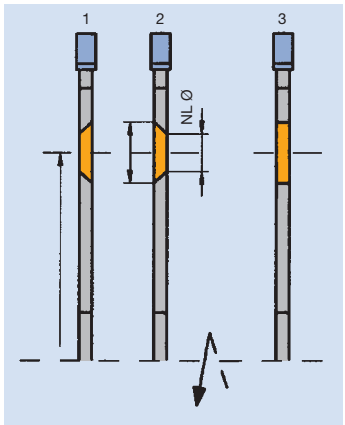

Type 1:
Countersink right
Type 2:
Countersink left
Type 3:
Pinhole without countersink

Trimming and sizing on CNC machining centres

Application:
For sizing of panels on CNC machining centres.

Machine:
Processing units on CNC machining centres.

Workpiece material:
Chipboard and fibre materials paper and plastic coated, veneered, laminated veneer lumber (e.g. plywood, multiplex plywood), solid wood panels across and along grain and for mitre joints.

Technical information:
Suitable for mounting on saw flanges of machining units. Balancing quality adapted for use on CNC units. Universal dimensions, among other things, for large cutting depths and cuts.

Circular sawblade WZ for CNC
WK 150 2, WK 850 2

D mm	SB mm	TDI mm	BO mm	NLA mm	Type	Z	ZF	SW °	WSS	ID
350	3,6	2,5	30	8/6/90 6/6,8/90	1	16	WZ	15		**165975** ●
350	3,5	2,7	30	8/6/90 6/6,8/90	1	72	WZ	15		**165976** ●

● available ex stock
□ available at short notice
Instruction manual visit www.leitz.org



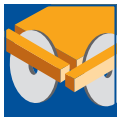



HW

Low Noise

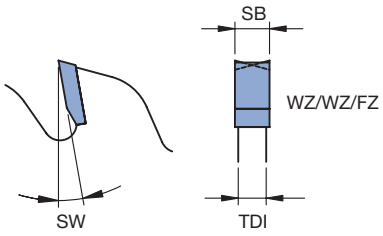

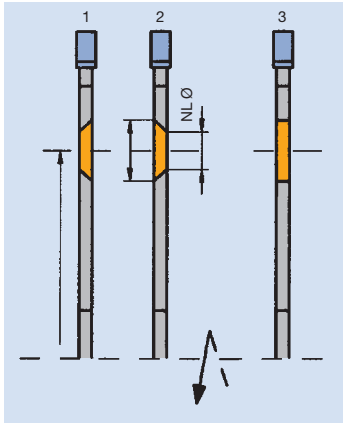

Type 1:
Countersink right
Type 2:
Countersink left
Type 3:
Pinhole without countersink

Trimming and sizing on CNC machining centres
Excellent - Katana

Application:
For sizing of panels on CNC machining centres.

Machine:
Processing units on CNC machining centres.

Workpiece material:
Chipboard and fibre materials paper and plastic coated, veneered, laminated veneer lumber (e.g. plywood, multiplex plywood), solid wood panels across grain and for mitre joints.

Technical information:
Katana tooth combination with alternating rake face bevel for highest cutting quality. High number of teeth for perfect edges and very smooth surfaces. Very well suited for mitre cuts in coated wood materials. Recommendation for use: When sizing coated wood-derived materials, for best cutting quality, first scribe with a small infeed (1 - 2 mm) in the same direction and then cut in the opposite direction. Suitable for mounting on saw flanges of machining units. Balancing quality adapted for use on CNC aggregates. **Excellent** design with filled laser ornaments for vibration damping and reduction of noise level.

Circular sawblade Katana for CNC
WK 879 2

Machine	D mm	SB mm	TDI mm	BO mm	NLA mm	Type	Z	ZF	SW °	WSS	ID
	180	3,0	2,2	30			60	WZ/WZ/FZ	10	■	**161267** ●
Homag, Weeke	180	3,0	2,2	30	2/7/42 4/5,5/45 8/6/90	3 2 1	60	WZ/WZ/FZ	10	■	**161250** ●
Flex 5, Flex 5+	180	3,0	2,2	40	8/6,6/52	2	60	WZ/WZ/FZ	10	■	**161251** ●
Homag, IMA	200	3,0	2,2	30	2/7/42 4/6/52 8/6/90	3 2 1	65	WZ/WZ/FZ	10	■	**161253** ●
IMA	200	3,0	2,2	30	2/7/42 4/6,6/60	3 2	65	WZ/WZ/FZ	10	■	**161254** ●
	220	3,0	2,2	30	8/6/90 8/6/70	1	70	WZ/WZ/FZ	10	■	**161255** ●
Flex 5, Flex 5+, Homag, Weeke	220	3,0	2,2	40	8/6,6/52	2	70	WZ/WZ/FZ	10	■	**161256** ●
	240	3,0	2,2	30	4/6,6/52 4/6,6/52 8/6/90	1 2 1	75	WZ/WZ/FZ	10	■	**161257** ●
Flex 5, Flex 5+, Weeke, Homag	240	3,0	2,2	40	8/6,6/52	2	75	WZ/WZ/FZ	10	■	**161258** ●
Biesse, Holz-Her	250	3,0	2,2	30	2/7/42 2/6/50 8/6/90	3 3 1	80	WZ/WZ/FZ	10	■	**161259** ●
Homag, Felder Format-4	280	3,0	2,2	30	2/7/42 8/6/90	3 1	85	WZ/WZ/FZ	10	■	**161260** ●
Biesse	300	3,0	2,2	50	1/6/80 6/5,5/80	3 3	100	WZ/WZ/FZ	10	■	**161266** ●
Homag	350	3,5	2,7	30	8/6/90	1	110	WZ/WZ/FZ	10	■	**161263** ●



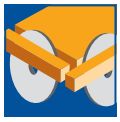







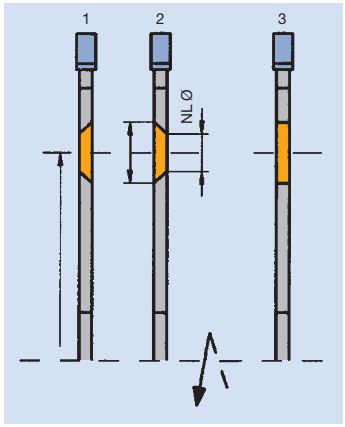

Type 1:
Countersink right
Type 2:
Countersink left
Type 3:
Pinhole without countersink

Trimming and sizing on CNC machining centres
Excellent - WhisperCut

Application:
For sizing of panels on CNC machining centres.

Machine:
Processing units on CNC machining centres.

Workpiece material:
Chipboard and fibre materials paper and plastic coated, veneered, laminated veneer lumber (e.g. plywood, multiplex plywood), solid wood panels across grain and for mitre joints.

Technical information:
Extreme noise reduction. Specially developed group serration for perfect cutting pitch and reduction of cutting forces. High tool life due to stable tooth geometry and DP tipping. Universally applicable for a wide range of materials. Recommendation for use: For optimal cutting quality when sizing coated wood-based materials, first make a scribing cut with the feed (1-2 mm deep), then perform the main cut against the feed on the return stroke. Suitable for mounting on saw flanges of machining units. Balancing quality adapted for use on CNC units. Can be resharpened 2 times. **Excellent** design with filled laser ornaments for vibration damping and reduction of noise level.

Circular sawblade WhisperCut for CNC
WK 879 2, WK 879 2 DP

D mm	SB mm	TDI mm	BO mm	NLA mm	Type	Z	ZF	SW °	WSS	ID
160	2,5	2,0	20			30	HZFA/WZFA	10		**190751** ●
180	2,5	2,0	30	8/6/90 2/7/42 4/6/45	1 3 2	35	HZFA/WZFA	10		**190713** ●
180	2,5	2,0	40	8/6,6/52	2	35	HZFA/WZFA	10		**190714** ●
200	2,5	2,0	30	2/7/42 4/6/52 8/6/90	3 2 1	40	HZFA/WZFA	10		**190715** ●
200	2,5	2,0	30	2/7/42 4/6,6/60	3 2	40	HZFA/WZFA	10		**190716** ●
220	2,5	2,0	30	8/6/90	1	45	HZFA/WZFA	10		**190717** ●
220	2,5	2,0	40	8/6,6/52	2	45	HZFA/WZFA	10		**190718** ●
240	2,5	2,0	30	4/6,6/52 4/6,6/52 8/6/90	1 2 1	50	HZFA/WZFA	10		**190719** ●
240	2,5	2,0	40	8/6,6/52	2	50	HZFA/WZFA	10		**190720** ●
250	2,5	2,0	30	2/7/42 2/6/50 8/6/90	3 3 1	50	HZFA/WZFA	10		**190721** ●
280	2,5	2,0	30	2/7/42 8/6/90	3 1	55	HZFA/WZFA	10		**190722** ●
303	3,2	2,4	30	KNL 8/6/90	3 1	60	HZFA/WZFA	10		**190728** ●
350	3,2	2,4	30	KNL 8/6/90	3 1	70	HZFA/WZFA	10		**190729** □

● available ex stock
□ available at short notice
Instruction manual visit www.leitz.org







HW

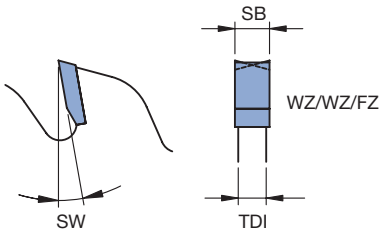

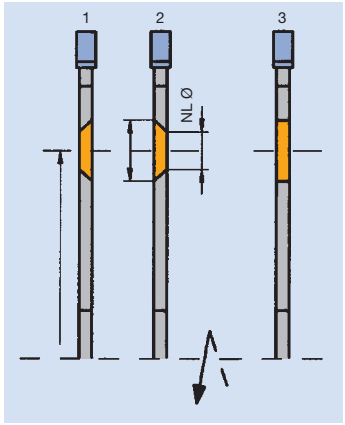

Type 1: Countersink right
Type 2: Countersink left
Type 3: Pinhole without countersink

DP

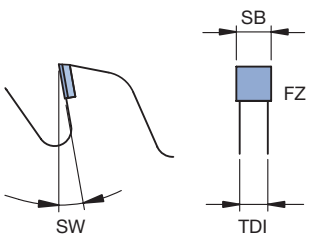

Grooving on CNC machining centres

Application:
For grooving.

Machine:
Processing units on CNC machining centres.

Workpiece material:
Chipboard and fibre materials paper and plastic coated, veneered, laminated veneer lumber (e.g. plywood, multiplex plywood).

Technical information:
Due to special tooth combination and high number of teeth suitable for tear-free grooves in any coatings. Mounting on saw flange of machining units. Use with feed recommended for best machining quality.

Grooving circular sawblade WZ/WZ/FZ for CNC, TC tipped
WK 859 2

Machine	D mm	SB mm	TDI mm	BO mm	NLA mm	Type	Z	ZF	SW °	WSS	ID
	100	3,5	2,5	20			35	WZ/WZ/FZ	15	■	**166014** ●
Homag, Weeke	100	3,5	2,5	30			35	WZ/WZ/FZ	15	■	**166000** ●
	100	4,0	2,8	20			35	WZ/WZ/FZ	15	■	**166015** ●
Homag, Weeke	100	4,0	2,8	30			35	WZ/WZ/FZ	15	■	**166008** ●
	100	5,0	3,5	20			35	WZ/WZ/FZ	15	■	**166016** ●
Homag, Weeke	100	5,0	3,5	30			35	WZ/WZ/FZ	15	■	**166001** ●
	100	8,5	3,5	20			35	WZ/WZ/FZ	15	■	**166013** ●
Homag	100	8,5	3,5	30	4/5,5/48 4/5,5/48	1 2	35	WZ/WZ/FZ	15	■	**166017** ●
SCM, Morbi-delli, Holz-Her	120	3,5	2,5	20	3/4,5/35 3/4,5/35	1 2	35	WZ/WZ/FZ	15	■	**166002** ●
Biesse, Felder	120	3,5	2,5	35	4/6,3/50 4/6,3/50	1 2	35	WZ/WZ/FZ	15	■	**166004** ●
SCM, Morbi-delli, Holz-Her	120	4,0	2,8	20	3/4,5/35 3/4,5/35	1 2	35	WZ/WZ/FZ	15	■	**166009** ●
Biesse, Felder	120	4,0	2,8	35	4/6,3/50 4/6,3/50	1 2	35	WZ/WZ/FZ	15	■	**166010** ●
SCM, Morbi-delli, Holz-Her	120	5,0	3,5	20	3/4,5/35 3/4,5/35	1 2	35	WZ/WZ/FZ	15	■	**166003** ●
Biesse, Felder	120	5,0	3,5	35	4/6,3/50 4/6,3/50	1 2	35	WZ/WZ/FZ	15	■	**166005** ●
Homag, Weeke	125	3,5	2,5	30	4/5,5/48 4/5,5/48	1 2	35	WZ/WZ/FZ	15	■	**166006** ●
Homag, Weeke	125	4,0	2,8	30	4/5,5/48 4/5,5/48	1 2	35	WZ/WZ/FZ	15	■	**166011** ●
Homag, Weeke	125	5,0	3,5	30	4/5,5/48 4/5,5/48	1 2	35	WZ/WZ/FZ	15	■	**166007** ●
Homag	200	5,0	3,5	30	4/5,5/52 4/5,5/52	1 2	60	WZ/WZ/FZ	15	■	**166012** ●

Technical information:
Mounting on saw flange of machining units. Use with feed recommended for tear-free grooves. DP mounting for long tool life.

Grooving circular sawblade FZ for CNC, DP tipped
WK 800 2 DP

D mm	SB mm	TDI mm	BO mm	Z	ZF	QAL	SW °	WSS	ID
100	4,0	2,5	20	12	FZ	DP	10	■	**192303** ●

Working process	For sizing, trimming and splitting.
Workpiece materials	Softwood and hardwood, chipboard and fibre materials (MDF, HDF etc.), without coat-ing, with plastic coating, with veneer, glulam, plywood, duroplastics, thermo-plastics, solid surface materials (Corian, Varicor etc.), compound materials (HPL, Tres-pa etc.), non-ferrous metals (aluminium, copper etc.).
Machines	Portable saws, trimming, mitre-joint machines, table saws and radial arm cross cut, light sizing saws.
Types of application	For cutting along and across grain, trimming and mitre cut.

Tooth shapes

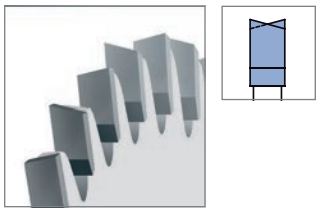

WZ (alternative top bevel teeth)

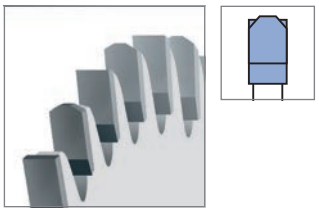

FZ/TR (square/trapezoidal teeth)

Teeth shape	Machine	Area of application
Square teeth	Portable saws	Solid wood along and across the grain, glued materials.
Alternative top bevel teeth – positive	Pull push saw, table and radial arm cross cut saws, light sizing saws.	Uncoated, plastic coated, veneered wood derived materials. Plywood, multiplex plywood. Composite/laminated materials.
Alternative top bevel teeth – negative	Trimming-, pull push saw, table saws and radial arm cross cut saws.	Solid wood across grain. Plastic hollow wall profiles. Non-ferrous metals – extruded profiles and pipes.
Flat/trapezoidal teeth – positive	Portable saws, pull push saw, table saws and radial arm cross cut saws, light sizing saws.	Uncoated wood derived materials, plastic coated, veneered. Non-ferrous metals – extruded profiles and pipes. NE-metals. Al-PU sandwich panels. Plastic hollow wall profiles. Plastic polymers (Corian, Varicor etc.).
Flat/trapezoidal teeth – negative	Portable saws, trimming-, mitre saws, table saws and radial arm cross cut saws.	Non-ferrous metals – extruded profiles/pipes. Plastic hollow wall profiles. Al-PU sandwich panels.
Alternative flat tooth with bevel	Portable saws, trimming-, mitre saws, table saws and radial arm cross cut saws, light sizing saws.	Flat and angle steel, steel plates, pipes, profiles, sandwich panels, composite materials.

Tooth pitch/cut quality

The saw cut quality is determined by the correct choice of the tooth shape and by the distance between the teeth. The distance between the teeth is determined by the tooth pitch.

Number of teeth	Tooth pitch	Cut quality
Low	~ 25 – 50 mm	For coarse cuts.
Medium	~ 14 – 25 mm	For good cutting quality.
High	~ 9 – 14 mm	For clean cuts to a very high quality.







HW

Comparison of feed force (MDF 38 mm)

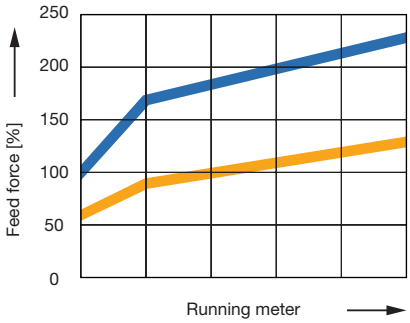

Conventional circular sawblade, Z 48, SB 2.2 mm, WZ

Leitz AccuCut circular sawblade, Z 42, SB 1.8 mm, WZ/WZ/WZ/FZ

Universal sizing - AccuCut

Application:
For cross-cut and sizing.

Machine:
Accu-portable sawblades.

Workpiece material:
Solid wood lengthwise and crosswise as well as glued, chipboard and fibre materials raw, plastic- and paper-coated, veneered, laminated wood (e.g. plywood, multiplex).

Technical information:
Long battery life due to thin kerf, cutting force-reduced cutting geometry and innovative tooth pitch. Very good cutting quality due to high number of teeth.

Circular sawblade AccuCut
WK 879 2

D mm	SB mm	TDI mm	BO mm	Z	ZF	SW °	WSS	ID
140	1,8	1,2	20	35	WZ/WZ/WZ/FZ	10		**166623** ●
160	1,8	1,2	20	42	WZ/WZ/WZ/FZ	10		**166620** ●
165	1,8	1,2	20	42	WZ/WZ/WZ/FZ	10		**166621** ●
184	1,8	1,2	20	42	WZ/WZ/WZ/FZ	10		**166624** ●
190	1,8	1,2	30	42	WZ/WZ/WZ/FZ	10		**166622** ●



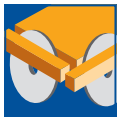



HW

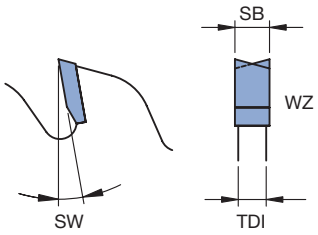

Universal sizing

Application:
For cutting along and across grain and sizing.

Machine:
Portable and table saws.

Workpiece material:
Solid wood along and across grain, glued. Chipboard and fibre materials, plastic and paper coated, veneered, laminated veneer lumber (e.g. plywood, multiplex plywood), duroplastics (compact laminated boards, e.g. HPL).

Technical information:
Tooth shape for universal use.

Circular sawblade WZ pos. cutting angle
WK 150 2

D mm	SB mm	TDI mm	BO mm	NLA mm	Z	ZF	SW °	WSS	ID
100	2,4	1,6	12		30	WZ	10		**166109** ●
100	2,4	1,6	22		30	WZ	10		**166110** ●
120	2,4	1,6	20		24	WZ	15		**166111** ●
125	2,4	1,6	20		24	WZ	15		**166112** ●
125	2,4	1,6	20		36	WZ	10		**166113** ●
140	2,4	1,6	20		24	WZ	15		**166114** ●
150	2,8	1,8	20		48	WZ	10		**166115** ●
160	1,6	1,1	20		24	WZ	25		**166100** ●
160	1,8	1,2	20		18	WZ	25		**166101** ●
160	1,8	1,2	20		32	WZ	5		**166102** ●
160	2,5	1,6	20		12	WZ	20		**166116** ●
160	2,5	1,6	20		24	WZ	15		**166117** ●
160	2,5	1,6	20		48	WZ	15		**166118** ●
165	1,8	1,2	20		18	WZ	15		**166159** ●
165	2,2	1,6	20		24	WZ	15		**166119** ●
165	2,2	1,6	20		48	WZ	10		**166104** ●
165	2,4	1,6	20		12	WZ	15		**166103** ●
170	2,5	1,6	30		48	WZ	10		**166120** ●
180	2,5	1,6	20		24	WZ	15		**166121** ●
180	2,5	1,6	20		48	WZ	10		**166122** ●
180	2,5	1,6	30		24	WZ	15		**166123** ●
180	2,5	1,6	30		48	WZ	10		**166105** ●
184	2,5	1,6	20		24	WZ	15		**166124** ●
190	1,8	1,2	30		24	WZ	15		**166160** ●
190	2,5	1,8	30		24	WZ	20		**166128** ●
190	2,8	1,8	16		24	WZ	15		**166125** ●
190	2,8	1,8	16		48	WZ	10		**166126** ●
190	2,8	1,8	30		16	WZ	20		**166127** ●
190	2,8	1,8	30		48	WZ	10		**166129** ●
200	3,0	2,0	30		34	WZ	10		**166130** ●
200	3,0	2,0	30		48	WZ	10		**166131** ●
210	2,4	1,6	30		24	WZ	15		**166133** ●
210	2,4	1,6	30		42	WZ	20		**166134** ●
210	2,4	1,6	30		64	WZ	10		**166135** ●
220	3,2	2,2	30		34	WZ	15		**166136** ●
220	3,2	2,2	30		60	WZ	10		**166107** ●
225	2,6	1,8	30		32	WZ	20		**166137** ●
225	2,6	1,8	30		48	WZ	10		**166138** ●
230	2,5	1,8	30		24	WZ	20		**166140** ●
230	2,5	1,8	30		48	WZ	15		**166108** ●
230	3,2	2,2	30		34	WZ	15		**166141** ●
235	2,5	1,8	30		24	WZ	15		**166156** ●
235	2,5	1,8	30		56	WZ	15		**166157** ●
235	3,2	2,2	30		24	WZ	15		**166142** ●
235	3,2	2,2	30		34	WZ	15		**166143** ●
240	3,0	2,0	30		34	WZ	15		**166144** ●
240	3,0	1,8	30		48	WZ	10		**166145** ●
250	2,8	2,0	30	KNL	24	WZ	25		**166146** ●
250	2,8	2,0	30	KNL	60	WZ	20		**166147** ●
260	3,2	2,2	30	KNL	60	WZ	10		**166148** ●

● available ex stock
□ available at short notice
Instruction manual visit www.leitz.org

D	SB	TDI	BO	NLA	Z	ZF	SW	WSS	ID
mm	mm	mm	mm	mm			°		
280	3,2	2,2	30	KNL	48	WZ	10		**166149** ●
280	3,2	2,2	30	KNL	60	WZ	10		**166150** ●
315	3,0	2,0	30	KNL	48	WZ	15		**166152** ●
315	3,2	2,2	30	KNL	28	WZ	20		**166151** ●
315	3,2	2,2	30	KNL	72	WZ	10		**166153** ●
355	3,2	2,2	30	KNL	16	WZ	20		**166154** ●
355	3,2	2,2	30	KNL	32	WZ	20		**166155** ●



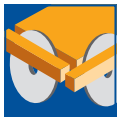



HW

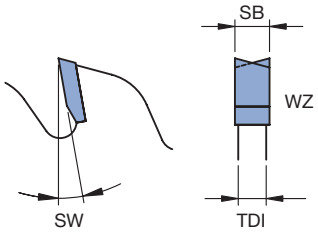

Circular sawblades for cutting logs

Application:
For sizing across grain, trimming and cross cutting.

Machine:
Rolling table saws and log saws.

Workpiece material:
Softwood and hardwood wet and dry.

Technical information:
Design with chip thickness limitation. Narrow cutting width and reduced number of teeth for reduced power consumption even with thick logs.

Circular sawblades WZ with thickness limitation
WK 150 4

D	SB	TDI	BO	NLA	Z	ZF	SW	WSS	ID
mm	mm	mm	mm	mm			°		
600	3,8	2,8	30	KNL	36	WZ	20		**166610** ●
700	4,2	3,2	30	KNL	42	WZ	20		**166611** ●









HW

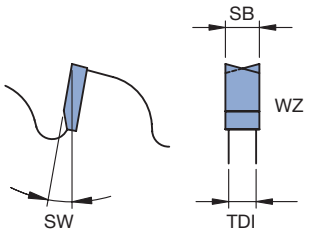

Trimming from the top

Application:
For sizing across grain, trimming and cross cutting.

Machine:
Trimming and mitre saws.

Workpiece material:
Softwood and hardwood wet and dry, laminated veneer lumber (e.g. plywood, multiplex plywood), thin walled plastic profiles (thickness < 2 mm).

Technical information:
Negative cutting angle especially for manually operated machines. Position of spindle above the workpiece.

Circular sawblade WZ cutting angle -5°
WK 160 2

D mm	SB mm	TDI mm	BO mm	NLA mm	Z	ZF	SW °	WSS	ID
210	2,8	2,0	30		60	WZ	-5		**166252** ●
216	1,8	1,2	30		48	WZ	-5		**166260** ●
216	3,0	2,0	30		24	WZ	-5		**166253** ●
216	3,0	2,0	30		48	WZ	-5		**166254** ●
216	3,0	2,0	30		64	WZ	-5		**166255** ●
250	2,4	1,8	30	KNL	48	WZ	-5		**166256** ●
250	2,4	1,8	30	KNL	60	WZ	-5		**166257** ●
250	3,2	2,6	30	KNL	80	WZ	-5		**166258** ●
255	2,8	2,0	30	KNL	60	WZ	-5		**166259** ●
260	2,5	1,8	30	KNL	60	WZ	-5		**166250** ●
260	2,5	1,8	30	KNL	80	WZ	-5		**166251** ●

● available ex stock
□ available at short notice
Instruction manual visit www.leitz.org









HW

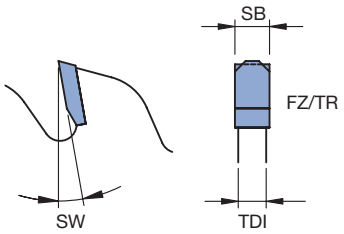

Trimming cut

Application:
For sizing, trimming and cross cutting.

Machine:
Portable and table saws.

Workpiece material:
Non-ferrous metal profiles, duroplastics (compact laminated boards, e.g. HPL), solid surface materials (e.g. Corian).

Technical information:
Solid tooth shape for universal use.

Circular sawblade FZ/TR cutting angle 5°
WK 452 2, WK 852 2

D mm	SB mm	TDI mm	BO mm	NLA mm	Z	ZF	SW °	WSS	ID
160	1,8	1,2	20		48	FZ/TR	5	■■	**166311** ●
160	2,6	1,8	20		48	FZ/TR	5	■■	**166300** ●
165	1,8	1,2	20		48	FZ/TR	5	■■	**166312** ●
180	3,2	2,6	16		42	FZ/TR	5	■■	**166301** ●
190	1,8	1,2	30		54	FZ/TR	5	■■	**166313** ●
190	2,8	1,8	30		54	FZ/TR	5	■■	**166302** ●
200	2,8	2,2	20		84	FZ/TR	5	■■	**166303** ●
200	3,2	2,6	30	KNL	48	FZ/TR	5	■■	**166304** ●
250	3,2	2,6	30	KNL	60	FZ/TR	5	■■	**166305** ●
250	3,2	2,6	30	KNL	80	FZ/TR	5	■■	**166306** ●
250	3,2	2,6	32	2/11/63	60	FZ/TR	5	■■	**166307** □
250	3,2	2,6	32	2/11/63	80	FZ/TR	5	■■	**166308** □
250	3,2	2,6	40	2/8/55 4/12/64	80	FZ/TR	5	■■	**166309** □
275	3,4	2,8	40	2/9/55 4/12/64	72	FZ/TR	5	■■	**166310** ●







HW

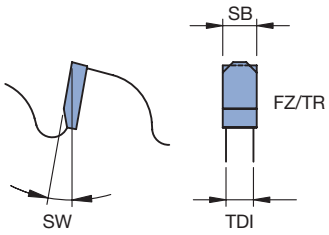

Trimming from the top

Application:
For sizing across grain, trimming and cross cutting.

Machine:
Trimming and mitre saws.

Workpiece material:
Non-ferrous metal or plastic profiles.

Technical information:
Negative cutting angle especially for manually operated machines. Position of spindle above the workpiece.

Circular sawblade FZ/TR cutting angle -5°
WK 462 2

D mm	SB mm	TDI mm	BO mm	NLA mm	Z	ZF	SW °	WSS	ID
160	2,5	1,8	20		56	FZ/TR	-5		**166350** ●
165	2,2	1,6	20		56	FZ/TR	-5		**166351** ●
180	3,2	2,6	20		42	FZ/TR	-5		**166352** ●
190	2,8	2,2	30		68	FZ/TR	-5		**166354** ●
200	3,2	2,6	30		60	FZ/TR	-5		**166356** ●
210	2,4	1,6	30		64	FZ/TR	-5		**166357** ●
210	2,8	2,0	30		60	FZ/TR	-5		**166358** ●
216	2,2	1,6	30		64	FZ/TR	-5		**166366** ●
216	3,0	2,4	30		64	FZ/TR	-5		**166359** ●
220	3,2	2,6	30		72	FZ/TR	-5		**166360** ●
225	2,6	1,8	30		68	FZ/TR	-5		**166361** ●
250	3,2	2,6	30	KNL	60	FZ/TR	-5		**166362** ●
250	3,2	2,6	30	KNL	80	FZ/TR	-5		**166363** ●
260	2,4	1,8	30	KNL	68	FZ/TR	-5		**166364** ●
275	3,2	2,6	30	KNL	88	FZ/TR	-5		**166365** ●

● available ex stock
□ available at short notice
Instruction manual visit www.leitz.org







HW

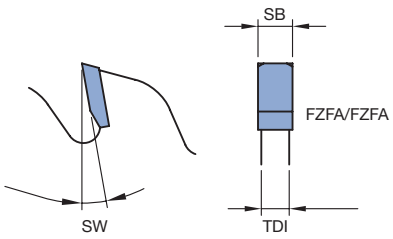

Dry sawing of ferrous metals - DryCut

Application:
For splitting, trimming and sizing.

Machine:
Trimming and mitre saws, portable machines and table saws.

Workpiece material:
Flat and angle steel, pipes, steel plates and profiles, sandwich panels.

Technical information:
Note: Slow feed! Reduce speed! There may be sparks in use. Pay attention to safety instructions of extraction.

Circular sawblade DryCut
WK 977 3

D mm	SB mm	TDI mm	BO mm	Z	ZF	SW °	WSS	ID
160	2,0	1,6	20	48	FZFA/FZFA	0	■	**163529** ●
165	2,0	1,6	20	48	FZFA/FZFA	0	■	**163530** ●
190	2,0	1,6	30	54	FZFA/FZFA	0	■	**163531** ●
210	2,0	1,6	30	60	FZFA/FZFA	0	■	**163532** ●
225	2,2	1,8	30	64	FZFA/FZFA	0	■	**163533** ●
254	2,2	1,8	30	72	FZFA/FZFA	0	■	**163534** ●
300	2,2	1,8	30	80	FZFA/FZFA	0	■	**163535** ●
305	2,4	2,0	25.4	80	FZFA/FZFA	0	■	**163536** ●
355	2,4	2,0	25.4	80	FZFA/FZFA	0	■	**163538** ●
400	3,0	2,4	30	84	FZFA/FZFA	0	■	**163539** ●





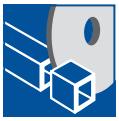



HW

Sizing in finish cut quality *Excellent* - GlossCut

Application:
For trimming and sizing.

Machine:
Portable and table saws.

Workpiece material:
Transparent thermoplastics (e.g. PMMA, PC), plastic wave boards (e.g. PVC), solid surface materialss (e.g. Corian), alu composite panels (e.g. Alucobond®). Non-ferrous metal or plastic profiles.

Technical information:
Special design of the cutting area for low-groove and low-burr cutting surfaces and tear-free cutting edges. **Excellent** design with filled laser ornaments for vibration damping and reduction of noise level (from D 210 mm).

Circular sawblade GlossCut
WK 357 2

D mm	SB mm	TDI mm	BO mm	NLA mm	Z	ZF	WSS	ID
160	2,2	1,6	20		48	FZFA/FZFA	■■	**161008** ●
165	2,2	1,6	20		48	FZFA/FZFA	■■	**161009** ●
210	2,4	1,8	30		68	FZFA/FZFA	■■	**161011** ●
250	2,8	2,2	30	KNL	72	FZFA/FZFA	■■	**161012** ●

Further GlossCut dimensions suitable for sizing, cross cut and mitre cut saws and twin sizing saws - see section Cutting Non-Ferrous Metals And Plastics.

● available ex stock
□ available at short notice
Instruction manual visit www.leitz.org







HW

Low Noise

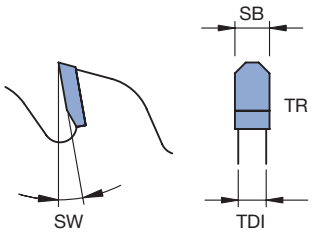

Universal sizing

Application:
For universal use on building sites.

Machine:
Universal cutting saws.

Workpiece material:
Panels and timbers with small concrete and metal inclusions, wood wool (e.g. Heraklith), gypsum plasterboard and form work panel of veneer, gas aerated slabs, Styrodur slabs, roundwood and squared timbers.

Technical information:
Tool body with round closed form and stable tooth shape. Special tungsten carbide grade for all requirements on construction sites. Noise reducing design.

Circular sawblades TR for saw benches
WK 123 2

D	SB	TDI	BO	NLA	Z	ZF	SW	WSS	ID
mm	mm	mm	mm	mm			°		
350	3,5	2,5	30	KNL	24	TR	10		**166025** ●
400	3,8	2,8	30	KNL	28	TR	10		**166026** ●
450	4,0	3,0	30	KNL	32	TR	10		**166027** ●
500	4,0	3,0	30	KNL	36	TR	10		**166028** ●





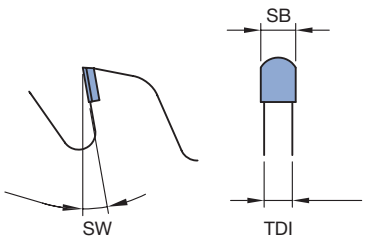

Cutting facade panels *Excellent*

Application:
For trimming and sizing.

Machine:
Table and sizing saws, portable and radial cross saws.

Workpiece material:
Gypsum and cement boards.

Technical information:
Robust tooth shape and DP mounting for long tool life. Special tool body design for high stability.

Circular sawblade DP design
WK 808 2 DP

D mm	SB mm	TDI mm	BO mm	NLA mm	Z	ZF	SW °	WSS	ID
160	3,2	2,4	20		4	P	5	■	**190302** ●
184	3,2	2,4	20		4	P	5	■	**190696** ●
190	3,2	2,4	20		4	P	5	■	**190303** ●
190	3,2	2,4	30		4	P	5	■	**190745** ●
225	3,2	2,4	30		6	P	5	■	**190304** ●
300	3,2	2,4	30	KNL	8	P	5	■	**190305** ●

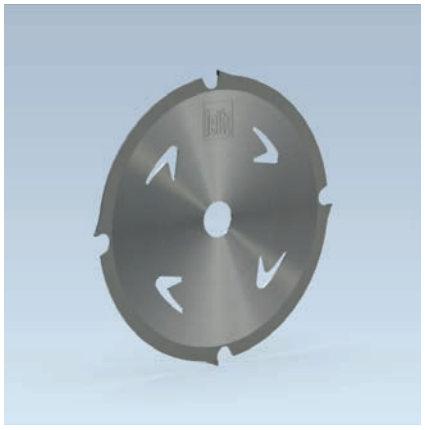



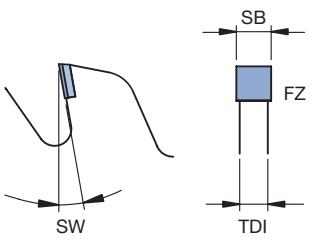

Cutting facade panels *Excellent*

Application:
For trimming and sizing.

Machine:
Accu-portable sawblades.

Workpiece material:
Gypsum and cement boards.

Technical information:
Thin kerf for low power requirement and long battery life. DP tipping for long tool life. Tool body with cooling holes for dust-free cutting surfaces.

Circular sawblade DP design
WK 100 3 DP

D mm	SB mm	TDI mm	BO mm	Z	ZF	SW °	WSS	ID
160	2,2	1,6	20	4	FZ	5	■	**190752** ●
165	2,2	1,6	20	4	FZ	5	■	**190753** ●
190	2,2	1,6	30	4	FZ	5	■	**190754** ●

● available ex stock
□ available at short notice
Instruction manual visit www.leitz.org

Reducing rings

Technical information:
For reducing the bore of circular sawblades reducing rings can be used.
Attention: When using reducing rings, pay attention to the distance to the flange.
Reducing rings in riffle design.

Reducing ring riffled
TB 100 0 02

D mm	BO mm	DIK mm	ID
20	16	1,0	**061148** ●
20	16	1,6	**061104** ●
30	20	1,4	**061149** ●
30	25,4	1,8	**061150** ●
32	30	1,8	**061151** ●

	Possible cause	Action
Sawblade wobbles	– Thickness of tool is too low.	Select a sawblade with a larger kerf or a smaller diameter or increase flange diameter.
	– Insufficient tooth projection over tool body (sawblade jams in the cut, runs hot, tension lost).	Select a sawblade with a higher lateral tooth projection.
	– Resin/chips on the flanges.	Clean flanges.
	– Flange run out tolerance too high.	Check and correct flange.
	– Defective motor spindle bearing.	Replace motor spindle bearing.
	– Tooth pitch and gullet too small.	Select a sawblade with a higher tooth pitch.
	– Unbalanced sawblade.	Balance the sawblade.
	– Blunt cutting edges.	Resharpen the sawblade.
	– Wrong sawblade tensioning.	Correct sawblade tensioning.
Wavy cut	– Irregular tooth pitch or one sided cut.	Correct sharpening machine adjustment, resharpen the sawblade.
	– Irregular tooth thickness.	Check and correct sawblade kerf.
	– Sawblade is blunt resin build up.	Clean and resharpen the sawblade.
	– Position of fence not parallel to feed direction.	Check and adjust position.
	– One sided load from edge cutting.	Use edging sawblades (hogger).
	– Cutting speed too low.	Select a larger sawblade diameter or increase RPM.
	– Wrong sawblade tensioning.	Correct sawblade tensioning.
Jamming of sawblade in cut	– Slot in saw bed is too big, insufficient chip flow, causing jamming between the saw and slot.	Replace saw bed.
	– Riving knife width is too thin.	Replace riving knife.
	– Gullet too small.	Select sawblade with larger gullet.
Curved cut when double edging	– Sawblades sharpened one sided.	Resharpen sawblade (correct kerf of sawblade and sharpening machine adjustment).
	– Resin and glue on rollers.	Clean and, if necessary, resharpen rollers.
	– Differences in wood thickness.	Improvements necessary at customer.
	– Too high cutting forces on one side.	Optimise cutting force division.
	– Worn conveyor belt guide.	Check and adjust chain guide.
	– Short and uneven workpieces.	Comply with minimum workpiece length required by the machine manufacturer‘s instructions.
	– When machining short workpieces and when transporting piece by piece.	Pay attention to angular cut off work pieces.

Problem	Possible cause	Action
Exceeded tolerances of horizontally cut lamellas	– Sawblade tensioning not suitable for horizontal application.	Check the sawblade tensioning.
	– High resin build up on tool, tool runs very hot from friction in cut.	Clean sawblades and check if blunt.
	– Thickness and position of riving knife not adjusted to the dimensions of strips and the sawblade kerf.	Use riving knife dimension matching the sawblade kerf. Adjust riving knife spacing to correspond to the thickness of strips.
Tear outs in workpieces coated on both sides when machining without scoring saw	– Sawblade projection over workpiece too small or too big.	Check and adjust sawblade projection.
	– Tooth shape or number of teeth not suitable for the application.	Select a sawblade suitable for the application.
	– Concentric running tolerances of the sawblade too high.	Have the sawblade checked by Leitz service.
	– The flange used on the machine does not correspond to the guidelines for flange diameter and concentric running tolerances.	Check flanges and, if necessary, clean them. If there is a wrong ratio of sawblade diameter to flange diameter, adjust accordingly.
Tear outs on the panel coating when cutting in stacks	– Tool is blunt.	Resharpen main sawblade.
	– Pressure beam cannot press evenly on uneven workpieces.	Check pressing force of pressure beam.
Tear outs where the tool leaves the workpiece when cutting in stacks	– The kerf of the scoring sawblade is too small for the main sawblade in use.	Adjust kerf of scoring sawblade to main sawblade accordingly.

Rounding of cutting edge
Mechanical and chemical wear cause rounding of main and minor cutting edges of a saw tooth.

In wet solid wood (e.g. green wood) chemical wear is approximately the same as mechanical wear.

When using tungsten carbide grades with special binding agents, chemical wear can be reduced. In the woodworking sector, dry wood is machined and mechanical wear dominates.

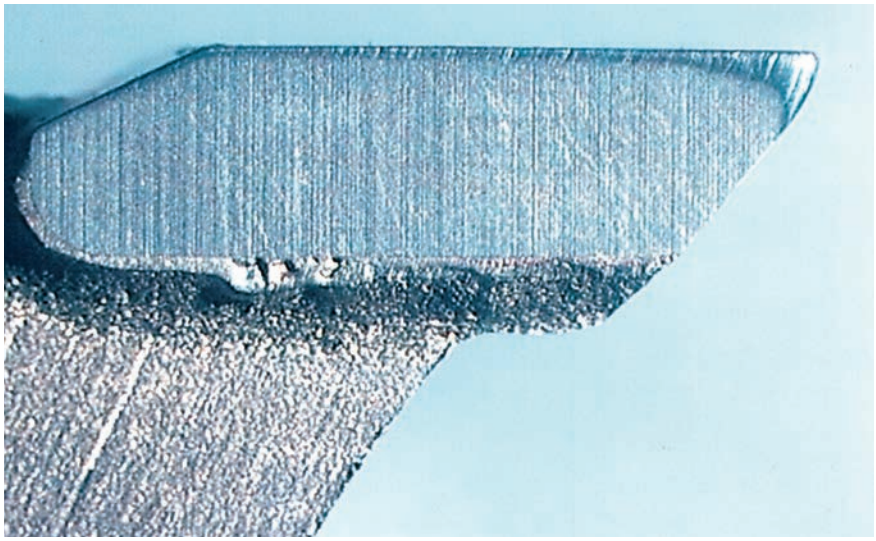

Worn HW saw tooth.

Cutting edge chips and cutting edge fracture
Hard foreign objects in the workpiece cause cutting edge chips and a deterioration of cut quality as well as increased shear forces. Mineral particles in wood derived materials are often the reason for cutting edge chips.

Saw teeth and pieces of the saw body can break off when, due to blunt cutting edges, the feed rate and cutting forces increase considerably.

A too high tooth feed can lead to choking of the lower part of the sawblade gullet and the tooth breaking off the saw body.

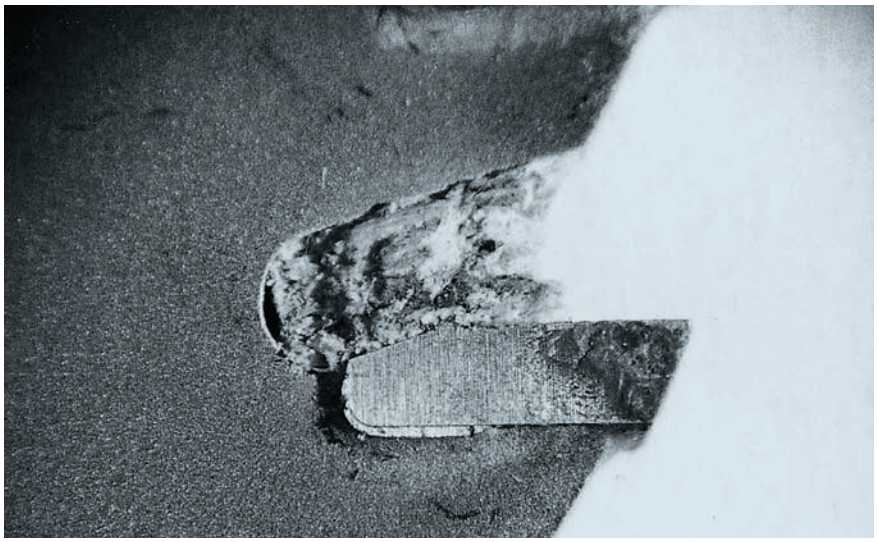

Choked gullet.

Cracking of tool body
Vibrations are caused by high loads on the cutting edges and the tool body (e.g. increased bluntness, high tooth feed or one sided stress). This can cause vibration cracks in the gullet or wiper slots.

High one sided stress, e.g. when edge cutting, leads to bending, chipping or cracking of the tool body.

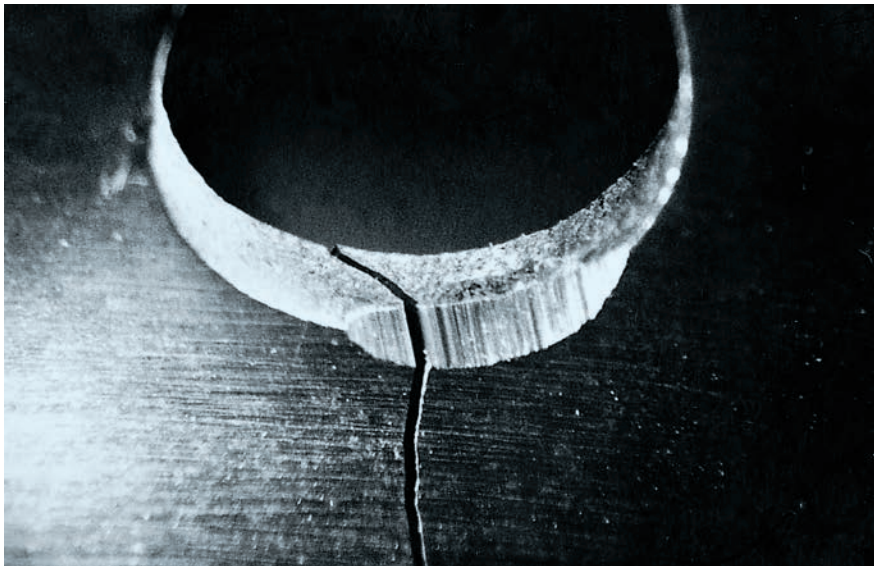

Fracture in the saw body.

Cutting edge rounding of DP
Mechanical wear of uniform workpiece materials causes rounding of the main and minor cutting edges. Apart from rounding, slight chips caused by foreign objects can occur when machining certain wood derived materials.

Rounding of the minor cutting edges can lead to reduced performance time and to deterioration in the cut and edge quality.

Action:
– Additional lateral eroding to the tooth relief angle.
This leads to:
– lower lateral tooth projection.
– loss of cutting width.
– higher resharpening costs.

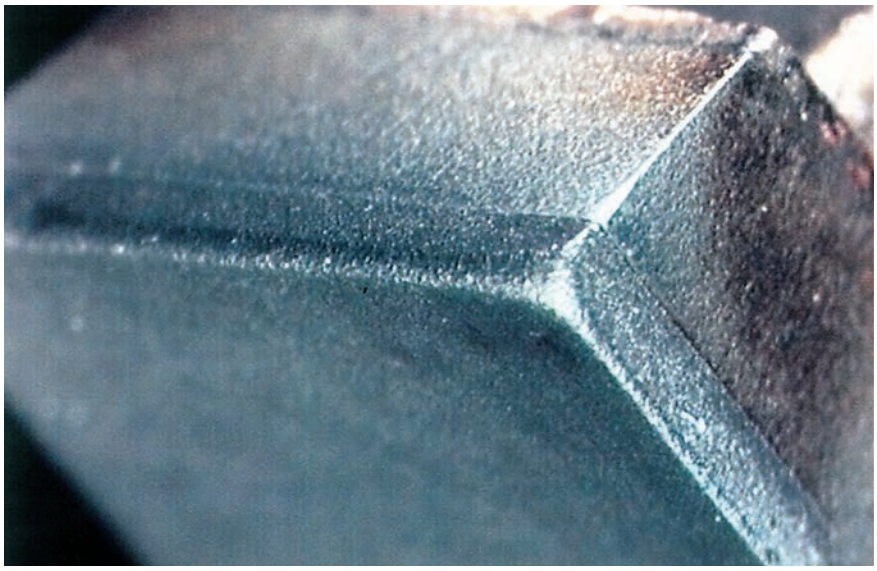

Worn DP saw tooth.

Cutting edge chips and cutting edge fracture
Hard mineral or metallic objects lead to cutting edge chips and to a deterioration in the cut quality.

Cutting edge chips can also be caused by inefficient dust extraction (chip flow).

Extreme bluntness and chips lead to high cutting forces and consequently cracks in the saw body material.

The condition of cutting edges and saw bodies must be checked regularly. When the performance time is up, the tools must be resharpened by experts.



Cutting edge fracture of a DP saw tooth.

Enquiry/order form special tools – sawing

Customer details: Customer number: (if known) ☐ Enquiry ☐ Order Delivery date: (not binding) CW

Company:

Street: Date:

Post code/place: Enquiry/order no.:

Country: Tool ID: (if known)

Phone/fax: No. of pieces:

Contact person:

Signature:

Workpiece material: (for type, quality and machining method, see selection overview) Quality:

Machining method:

Cutting height: mm

Cutting method: ☐ single piece ☐ in stacks

Cutting quality: ☐ rough (rough sawn) ☐ fine (cut to size quality) ☐ ultra fine (finish cut quality)

Solid wood: ☐ along grain ☐ across grain

Panel materials: ☐ sizing ☐ square cutting

Machine

Manufacturer:

Type:

Model:

RPM: min^{-1}

Type of feed: ☐ MAN (Hand) ☐ MEC (Mech)

Feed rate: m min^{-1}

Flange diameter: mm

Motor power: kW

Cutting direction: ☐ against feed (GGL) ☐ with feed (GLL)

Tool: (must be completed)

Diameter: mm

Cutting width: mm

Bore: mm

Keyway/double keyway: mm

Pinholes:

Use: ☐ Single tool ☐ Tool set

Cutting material: ☐ Stellite™ ☐ HW (TC) ☐ DP (DIA)

(Complete if sawblade design is known)

Number of teeth:

Shape of teeth:

Tool body thickness: mm

Tool body shape (as per drawing): (enter number)

Additional elements of saw body (as per drawing): (enter number)

Standard design: ☐

Low noise design: ☐ with laser ornaments ☐ UT ☐ with damping foil

Direction of rotation (as per drawing): ☐ left hand rotation (LL) ☐ right hand rotation (RL)

Recessed tool body: Hub diameter: mm

Hub thickness: mm

Position of hub: ☐ Side 1 ☐ Side 2

Bore – note on sketch:
Cut out teeth – note on sketch.

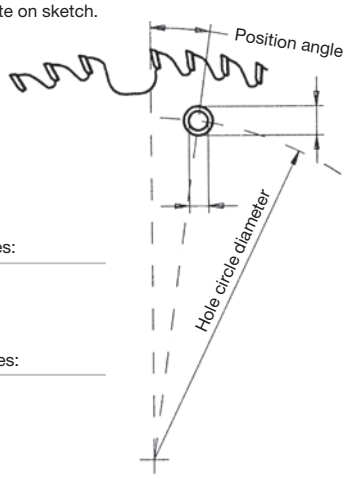

Number of pinholes:

Number of recesses:

Tooth shapes

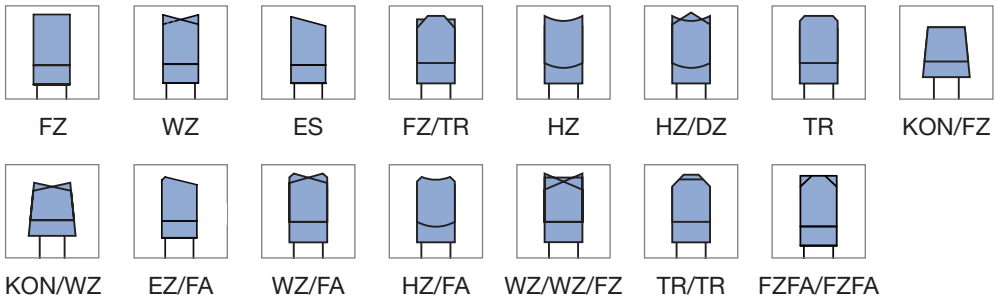

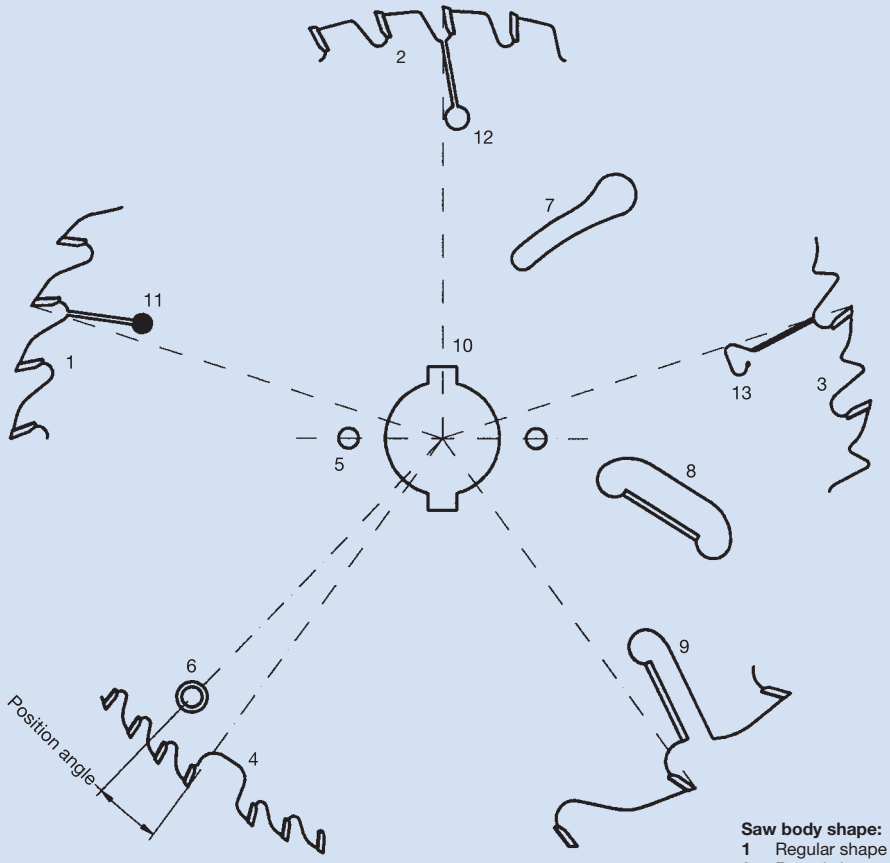

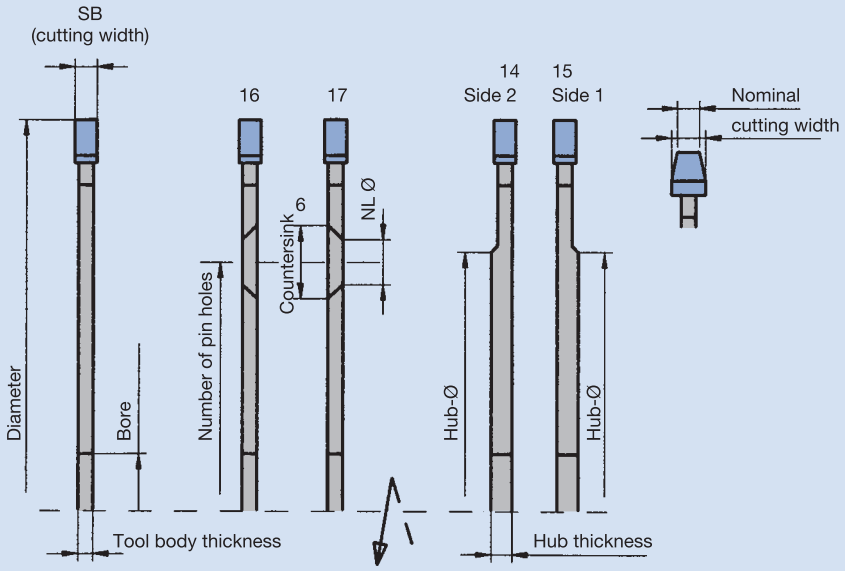

Saw body shape:
1 Regular shape
2 Round shape
3 Limitor

Cut out:
4 Tooth cut out

Pinholes:
5 Pinhole
6 Pinhole with countersink

Additional elements in the saw body:
7 Cooling element
8 Wiper slot with HW cutting edge inside
9 Wiper slot with HW cutting edge outside
10 Keyway or double keyway

Expansion slots:
11 Expansion slot shape A, with rivets
12 Expansion slot shape A
13 Expansion slot shape D

Position of hub:
14 Position of hub, side 2
15 Position of hub, side 1

Direction of rotation:
16 Right hand rotation
17 Left hand rotation

Key to pictograms


Sawing
thin kerf


Sawing
horizontal


Sawing
along grain


Sawing
across grain


Sawing
universal


Scoring,
sawing


Scoring and
sawing stacks


Sawing
hollow sections


Sawing
plastic single


Sawing
plastic stacks


Sawing
solid transparent plastic


Sawing
hollow metal


Sawing
crosscut metal


Scoring,
hogging


Grooving,
horizontal and vertical


Tipped tool



Low noise

HW
Tungsten carbide

DP
Polycrystalline
diamond (PCD)

www.leitz.org

SDZ/MA 05/2025 Subject to changes prior to technical developments. © Leitz GmbH & Co. KG

Panel processing

Leitz Lexicon Edition 7 | Version 3 | 05/2025



Explanation of abbreviations

A	=	dimension A
a_e	=	cutting thickness (radial)
a_p	=	cutting depth (axial)
ABM	=	dimension
APL	=	panel raising length
APT	=	panel raising depth
AL	=	working length
AM	=	number of knives
AS	=	anti sound (low noise design)
b	=	overhang
B	=	width
BDD	=	thickness of shoulder
BEM	=	note
BEZ	=	description
BH	=	tipping height
BO	=	bore diameter
CNC	=	Computerized Numerical Control
d	=	diameter
D	=	cutting circle diameter
D0	=	zero diameter
DA	=	outside Diameter
DB	=	diameter of shoulder
DFC	=	Dust Flow Control (optimised chip clearance)
DGL	=	number of links
DIK	=	thickness
DKN	=	double keyway
DP	=	polycrystalline diamond
DRI	=	rotation
FAB	=	width of rebate
FAT	=	depth of rebate
FAW	=	bevel angle
FLD	=	flange diameter
f_z	=	tooth feed
$f_{z\ eff}$	=	effective tooth feed
GEW	=	thread
GL	=	total length
GS	=	Plunging edge
H	=	height
HC	=	tungsten carbide, coated
HD	=	wood thickness (thickness of workpiece)
HL	=	high-alloyed tool steel
HS	=	high-speed steel (HSS)
HW	=	tungsten carbide (TCT)
ID	=	ident number
IV	=	insulation glazing
KBZ	=	abbreviation
KLH	=	clamping height
KM	=	edge breaker
KN	=	single keyway
KNL	=	combination pinhole consists of 2/7/42 2/9/46,35 2/10/60
L	=	length
l	=	clamping length
LD	=	left hand twist
LEN	=	Leitz standard profiles
LH	=	left hand rotation
M	=	metric thread
MBM	=	minimum order quantity
MC	=	multi-purpose steel, coated
MD	=	thickness of knife
min^{-1}	=	revolutions per minute (RPM)
MK	=	morse taper
m min^{-1}	=	metres per minute
m s^{-1}	=	metres per second
n	=	RPM
$n_{max.}$	=	maximum permissible RPM
NAL	=	position of hub
ND	=	thickness of hub
NH	=	zero height
NL	=	cutting length
NLA	=	pinhole dimensions
NT	=	grooving depth
P	=	profile
POS	=	cutter position
PT	=	profile depth
PG	=	profile group
QAL	=	cutting material quality
R	=	radius
RD	=	right hand twist
RH	=	right hand rotation
RP	=	radius of cutter
S	=	shank dimension
SB	=	cutting width
SET	=	set
SLB	=	slotting width
SLL	=	slotting length
SLT	=	slotting depth
SP	=	tool steel
ST	=	Cobalt-basis cast alloys, e.g. Stellit®
STO	=	shank tolerance
SW	=	cutting angle
TD	=	diameter of tool body
TDI	=	thickness of tool
TG	=	pitch
TK	=	reference diameter
UT	=	cutting edges with irregular pitch
V	=	number of spurs
v_c	=	cutting speed
v_f	=	feed speed
VE	=	packing unit
VSB	=	adjustment range
WSS	=	workpiece material
Z	=	number of teeth
ZA	=	number of fingers
ZF	=	tooth shape (cutting edge shape)
ZL	=	finger length

Notes to the Lexicon concerning the diagrams and tables

The statements made in the diagrams and tables relate to specific conditions and represent parameters from tests subjected to defined conditions. Variations when using tools in individual case due to special application conditions may be possible. Our support team will provide you with detailed information.



2. Panel processing





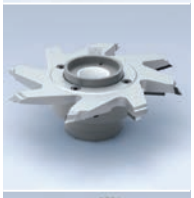



2.1	Edge processing	2
2.1.1	Edging processing machines	2
2.1.2	Jointing cutters	4
2.1.3	Compact hoggers - DP	14
2.1.4	Cutting and segment hoggers	18
2.1.5	Grooving cutters	23
2.1.6	End trim sawblades	26
2.1.7	Edge finishing tools	28
2.2	Postforming processing	58
2.2.1	Postforming processing machines	58
2.2.2	Postforming tools	60
2.3	Panel processing	62
2.3.1	Segment hoggers for sizing	62
Troubleshooting		65
Signs of wear		66
Enquiry/order form special tools – panel processing		68
Alphabetical product index		70
ID index		71

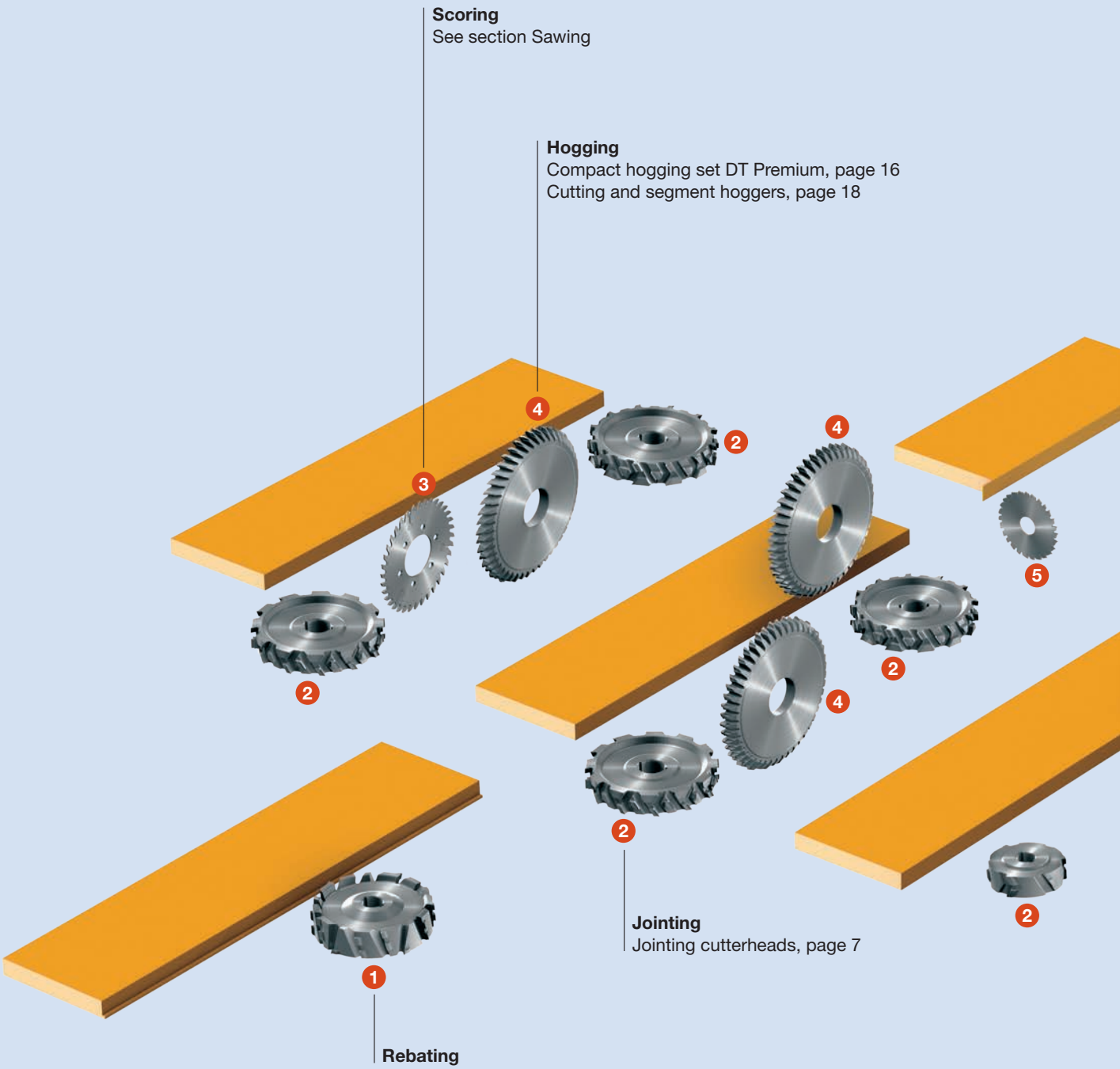
Scoring
See section Sawing
Hogging
Compact hogging set DT Premium, page 16
Cutting and segment hoggers, page 18
Jointing
Jointing cutterheads, page 7
Rebating

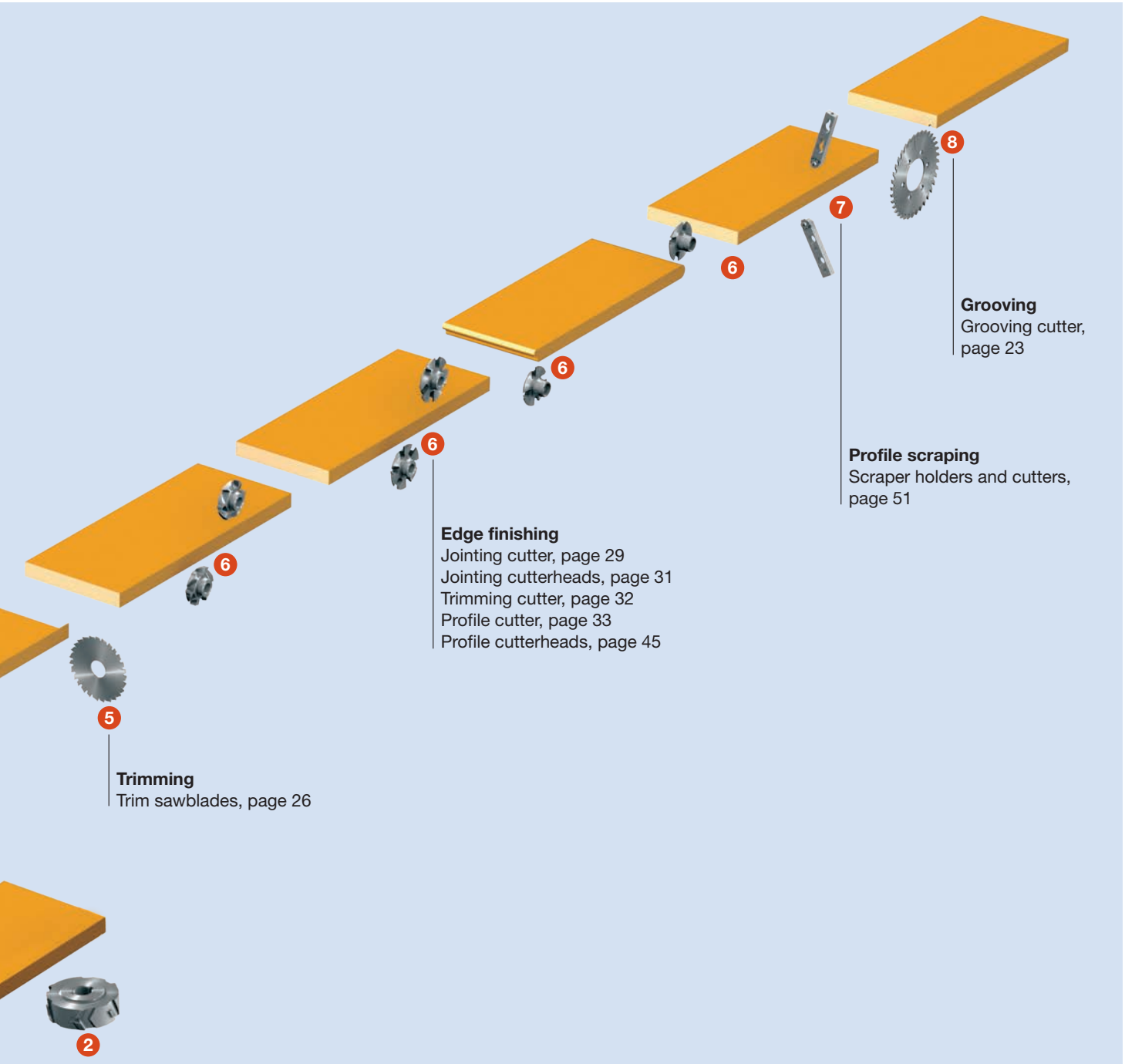

Trimming
Trim sawblades, page 26

Edge finishing
Jointing cutter, page 29
Jointing cutterheads, page 31
Trimming cutter, page 32
Profile cutter, page 33
Profile cutterheads, page 45

Profile scraping
Scraper holders and cutters, page 51

Grooving
Grooving cutter, page 23

Type of operation

Cutting of the finished size with pre-sized, panel shaped working pieces. Therefore the jointing tools only are peripheral cutting and not with side relief!

Workpiece material

Softwood and hardwood, glulam, chipboard and fibre material, uncoated and veneered, plastic and paper coated.

Machines

Spindle moulders, edgebanding machines with sizing part, double end tenoners. Counter milling or jump cutting: Depending on the processing quantity and material, diamond tools or cutterheads with tungsten carbide turnblades are used.

Application

Jointing against feed: For all panel working materials with or without coating.
Jointing with feed: For machining solid wood with heavily irregular course of fibres and risk of tear outs. Only allowed for machines with mechanical feed. Note: Chips are very difficult to remove.
Jump cutting: Jointing with and against feed when cutting across, to prevent tear outs on the front and backside of the workpiece when these are already glued.

Tool Designs

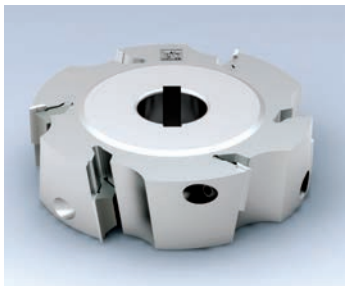

Turnblade cutterhead with alternate shear angle: Suitable for all coated and uncoated panel shaped working materials. Turnblade tools with shear angle produce a curved surface on the workpiece. For exactly straight jointing edges we recommend ProfilCut profile cutterheads with profiled edges (special production) or diamond jointing cutters.

Diamond jointing cutter with alternate shear angle:
S = with symmetrical edge arrangement: Produce a slight hollow section on the milled jointing edge. This has the advantage that the edgebanding on the outside edge close tightly. The tool always must be adjusted symmetrically to the workpiece thickness. The tool can be used in RH and LH rotation.
AS = Asymmetrical edge arrangement: One cutting edge cuts from bottom to top, the top cutting edges all are directed downward which is advantageous for frequently changing material thicknesses.



2-part tools on synchronically adjustable sleeve:
These tools with alternate shear angles are advantageous for high quantities and nearly constant workpiece thicknesses as with increasing tool blunting the jointing edges on the coating do not remain tear-free. The stepless and synchronic adjustment allows the use of multiple performance times and thus an increase of the tool lifetime.

Diamaster WhisperCut



Diamaster WhisperCut – The lightweight and efficient jointing cutterhead for low noise sizing of panel material.

Advantages at a glance:
- Significant noise reduction of up to 5 dB(A) through optimized tool body shape and weight halving
- Trouble free chip ejection and excellent chip collection through DFC technology
- Individual use as per customer requirement: resharpenable or as changing knife system

Diamaster EdgeExpert





Diamaster EdgeExpert – The expert for top edge performance especially in case of demanding decors.

In interior design and furniture manufacture, the use of processed material surfaces is increasing in both use and importance. This requires new tool concepts such as the Diamaster EdgeExpert program from Leitz. Whether very thin paper decors, veneers or foil- and high-gloss coating, the Diamaster EdgeExpert enables tear-free edges and even middle layer on continuous machines and CNC machining centres. Especially suitable for zero-joint edging technology with laser, plasma or hot air.

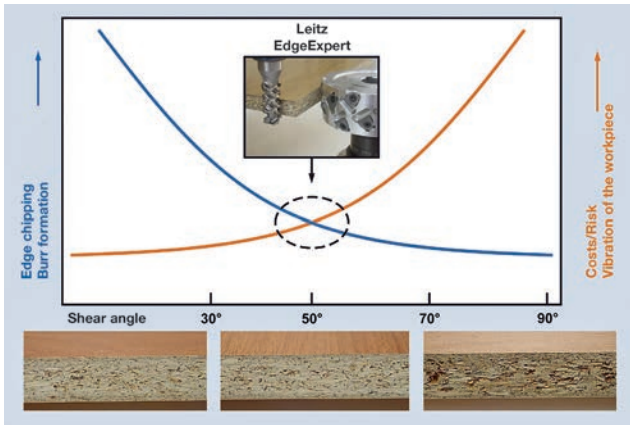

Dust collection

The tool characteristics of the joint cutter Diamaster PRO low noise model range have DFC gullet for delayed chip ejection and are suitable for i-system.

Chip removal

The chip removal has an important influence on the machining quality and on the tool life. Through a reduction of the chip removal, the arched length of the tool positioned in the interference is decreased, causing the tool to cut less material and to increase the tool life.

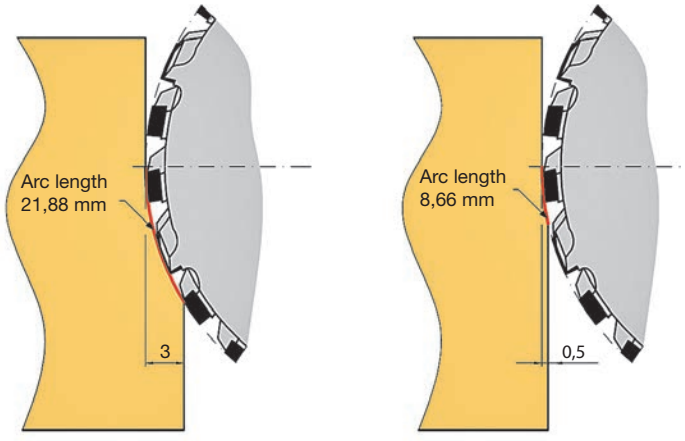

Noise emission

For noise reduction, LowNoise tools Diamaster PRO with its low knife protrusion, staggered edge and shear can be used. See section Edge Processing - Jointing Cutters.

Service

The Diamaster WhisperCut knives either can be serviced by Leitz Service or by the user on site.

Resharpening Diamaster WhisperCut





WhisperCut: Diamond knives are resharpenable in the tool body up to 3 times
WhisperCut PLUS: Diamond knives are resharpenable in the tool body up to 10 times

Diamaster WhisperCut – The jointing cutterhead with exchangeable knives

- constant diameter
- quick and easy knife change by the user on site
- no costly adjustment at the machine
- no interchangeable tool required
- optimal knife utilization with small material thicknesses

Feed speed related to RPM and number of teeth Z

Material: Chipboard with melamine resin coating

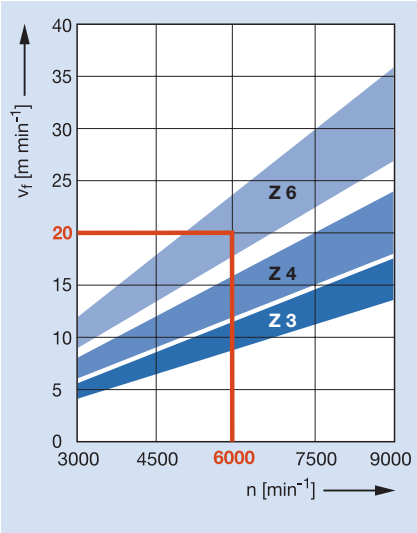





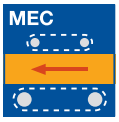









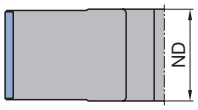

Position of boss (NAL) 1

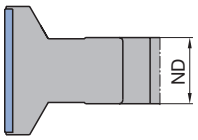

Position of boss (NAL) 2

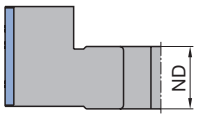

Position of boss (NAL) 3

WhisperCut jointing / milling cutter - cutterhead design

Application:
For tear-free and low noise jointing of workpiece edges side with and against feed (jump cutting).

Machine:
Edgebanding machines, copy shaping machines, double-end tenoners etc.

Workpiece material:
Chip and fibre board (MDF etc.) uncoated, veneered, plastic and paper coated, fibre reinforced plastics (GFRP, CFRP etc.).

Technical information:
DP tipped cutterhead with alternate shear angle for tear-free jointing edges and cutting surfaces. Tool with knife arrangement S can be used left and right and produces hollow cut for tightly closing edgebanding. Low noise design with up to 5 dB(A) noise reduction and highly efficient chip collection (>95%) by DFC. Significant weight reduction by using an aluminium alloy tool body. Carrier body for multiple use with exchangeable knives. 0.6 mm resharpening area.

Diamaster WhisperCut - DFC, LowNoise, aluminium alloy tool body
WF 230 2 DP, WM 230 2 01

Machine	D mm	SB mm	ND mm	BO mm	NAL	Z	Knife Type	Type	ID LH	ID RH
Ayza Mizrak	70	54	30	20 DKN	2	2x5	10xD	AS	**192320** ●	**192321** ●
Ayza Mizrak	125	54	40	30 DKN	3	3x5	15xE	AS	**192326**	**192327**
Biesse	80	45	53	30 DKN	1	2x4	8xB	S	**192127** ●	**192127** ●
Biesse	80	65	53	30 DKN	2	2x6	12xB	S	**192128** ●	**192128** ●
Biesse	100	43	75	30 DKN	1	3x4	12xA	S	**192088**	**192088**
Biesse	100	65	75	30 DKN	1	3x6	18xA	S	**192089**	**192089**
Biesse	125	43	40	30 DKN	2	3x4	12xE	S	**075627** ●	**075627** ●
Biesse	125	43	51	30 DKN	2	3x5	12xE 3xA1	AS°	**192379**	**192380**
Biesse	125	61	51	30 DKN	2	3x6	15xE 3xA1	AS°	**192381**	**192382**
Biesse	125	63	40	30 DKN	2	3x6	18xE	S	**075626** ●	**075626** ●
Brandt	100	43,6	40,6	25 DKN	3	2x4	8xA	AS	**192211** ●	**192212** ●
Brandt	100	62,5	40,6	25 DKN	3	2x6	12xA	AS	**192345**	**192346**
Brandt	100	43,6	40,6	30 DKN	3	3x4	12xA	AS	**090885** ●	**090886** ●
Brandt	100	65,2	40,6	30 DKN	3	3x6	18xA	AS	**090887** ●	**090888** ●
Brandt	100	105	85	30 DKN	3	3x10	30xA	AS	**090891**	**090892**
Cehisa	100	54	25	20 DKN	2	2x5	10xA	AS	**192078**	**192079**
EBM	70	43	61	25 DKN	1	2x4	8xB	AS	**192237** ●	**192238** ●
EBM	70	63	81	25 DKN	1	2X6	12xB	AS	**192239** ●	**192240** ●
EBM	100	43	61	30 DKN	1	2x4	8xB	AS	**192233** ●	**192234** ●
EBM	100	63	81	30 DKN	1	2x6	12xB	AS	**192235** ●	**192236** ●
Felder	60	63	63.5	25 DKN	3	2x7	12xC 2xC2	AS°		**192278** ●
Felder	60	63	63.5	25 DKN	3	2x7	12xC 2xC1	AS°	**192277** ●	
Felder	80	48,5	64	25 DKN	1	3x6	12xF 3xB1 3xB2	AS°	**192281** ●	**192282** ●
Felder	80	64	64	25 DKN	3	2x7	12xF 2xB2	AS°		**192300**
Felder	80	64	64	25 DKN	3	2x7	12xF 2xB1	AS°	**192299**	
Felder	80	64	64	25 DKN	3	3x7	18xF 3xB1	AS°	**192279** ●	
Felder	80	64	64	25 DKN	3	3x7	18xF 3xB2	AS°		**192280** ●
Fravol	60	63	63.5	25 DKN	3	2x7	12xC 2xC1	AS°	**192247** ●	
Fravol	60	63	63.5	25 DKN	3	2x7	12xC 2xC2	AS°		**192248** ●
Fravol	100	65	56.5	30 DKN	3	2x6	12xA	AS	**192243**	**192244**

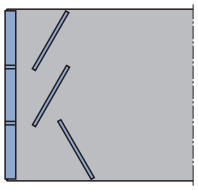

Type AS = asymmetric tip arrangement

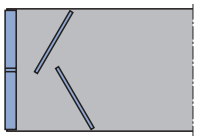

Type S = symmetric tip arrangement

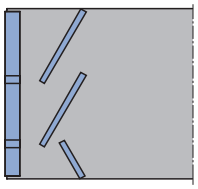

Type AS° = asymmetric tip arrangement with a narrow row of teeth below

Machine	D mm	SB mm	ND mm	BO mm	NAL	Z	Knife Type	Type	ID LH	ID RH
Fravol	100	84	56.5	30 DKN	3	2x8	14xA 14xA1	AS°	**192285** ●	
Fravol	100	84	56.5	30 DKN	3	2x8	14xA 14xA2	AS°		**192286** ●
Fravol	100	124	96	30 DKN	2	2x11	22xA	AS	**192245**	**192246**
Hebrock	70	43	61	25 DKN	1	2x4	8xB	AS	**192237** ●	**192238** ●
Hebrock	70	63	81	25 DKN	1	2X6	12xB	AS	**192239** ●	**192240** ●
Hebrock	100	43	61	30 DKN	1	2x4	8xB	AS	**192233** ●	**192234** ●
Hebrock	100	63	81	30 DKN	1	2x6	12xB	AS	**192235** ●	**192236** ●
Holz-Her 1801/1802	70	48	41	30 DKN	2	2x5	8xD 2xD2	AS°		**192221** ●
Holz-Her 1801/1802	70	48	41	30 DKN	2	2x5	8xD 2xD1	AS°	**192222** ●	
Holz-Her 1801/1802	70	64	41	30 DKN	2	2x7	12xD 2xD2	AS°		**192223** ●
Holz-Her 1801/1802	70	64	41	30 DKN	2	2x7	12xD 2xD1	AS°	**192224** ●	
Holz-Her 1804	100	63	39,5	30 DKN	2	3x6	18xB	S	**192147**	**192148**
Holz-Her 1891	100	43	25	30 DKN	2	2x4	8xA	AS	**192082** ●	**192083** ●
Holz-Her 1891	100	65	25	30 DKN	2	2x6	12xA	AS	**192084**	**192085**
Holz-Her FG701	100	63	39,5	HSK 32 R	2	3x6	18xB	S	**192307**	**192308**
Homag	100	43,6	40,6	25 DKN	3	2x4	8xA	AS	**192211** ●	**192212** ●
Homag	100	62,5	40,6	25 DKN	3	2x6	12xA	AS	**192345**	**192346**
Homag	100	43,6	40,6	30 DKN	3	3x4	12xA	AS	**090885** ●	**090886** ●
Homag	100	65,2	40,6	30 DKN	3	3x6	18xA	AS	**090887** ●	**090888** ●
Homag	100	105	85	30 DKN	3	3x10	30xA	AS	**090891**	**090892**
Homag	125	42,6	54	30 DKN	3	3x4	12xA	AS	**192287** ●	**192288** ●
Homag	125	43	40	30 DKN	2	3x4	12xE	S	**075627** ●	**075627** ●
Homag	125	63	40	30 DKN	2	3x6	18xE	S	**075626** ●	**075626** ●
Homag	125	64,4	54	30 DKN	3	3x6	18xA	AS	**192289**	**192290**
IMA	125	32	34	30 DKN	2	3x4	12xD	AS	**192092**	**192093**
IMA	125	43	42	30 DKN	2	3x5	15xD	AS	**192094** ●	**192095** ●
IMA	125	63	42	30 DKN	3	3x7	21xD	AS	**192096** ●	**192097** ●
IMA Advantage	125	43	57	30 DKN	1	3x5	15xD	AS	**192098** ●	**192099** ●
IMA Advantage	125	65	57	30 DKN	1	3x7	21xD	AS	**192100** ●	**192101** ●
Mizrak Makine	70	54	30	20 DKN	2	2x5	10xD	AS	**192320** ●	**192321** ●
Ott	85	48	50	30 DKN	3	3x5	12xB 3xB1	AS°	**192209** ●	
Ott	85	48	50	30 DKN	3	3x5	12xB 3xB2	AS°		**192210** ●
Ott	85	65	45	30 DKN	2	3x6	18xB	AS	**192227** ●	**192228** ●
Ott	85	85	50	30 DKN	3	3x8	24xB	AS	**192229**	**192230**
Ott	100	43,6	40,6	30 DKN	3	3x4	12xA	AS	**090885** ●	**090886** ●
Ott	100	65,2	40,6	30 DKN	3	3x6	18xA	AS	**090887** ●	**090888** ●
SCM	80	56	58	30 DKN	2	2x6	10xC 2xC1	AS°	**192318**	
SCM	80	56	58	30 DKN	2	2x6	10xC 2xC2	AS°		**192319**
SCM	100	51	60	30 DKN	3	2x6	8xB 2xB1 2xB2	AS°	**192215** ●	**192216** ●
SCM	100	51	60	30 DKN	3	3x6	12xB 3xB1 3xB2	AS°	**192217** ●	**192218** ●
SCM	100	66	60	30 DKN	3	2x7	12xB 2xB1	AS°	**192213** ●	
SCM	100	66	60	30 DKN	3	2x7	12xB 2xB2	AS°		**192214** ●

● available ex stock
□ available at short notice
Instruction manual visit www.leitz.org

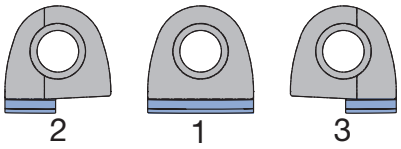

Shape of WhisperCut spare knives
SB 6.7 / 14 mm

Machine	D mm	SB mm	ND mm	BO mm	NAL	Z	Knife Type	Type	ID LH	ID RH
SCM	100	66	60	30 DKN	3	3x7	18xB 3xB1	AS°	**192219** ●	
SCM	100	66	60	30 DKN	3	3x7	18xB 3xB2	AS°		**192220** ●
SCM	125	51		HSK 32 R	2	3x6	12xA 3xA1 3xA2	AS°	**192337**	**192338**
SCM	125	51		HSK 32 R	2	4x6	16xA 4xA1 4xA2	AS°	**192341**	**192342**
SCM	125	66		HSK 32 R	2	3x7	18xA 3xA1	AS°	**192339**	
SCM	125	66		HSK 32 R	2	3x7	18xA 3xA2	AS°		**192340**
SCM	125	66		HSK 32 R	2	4x7	24xA 4xA1	AS°	**192343**	
SCM	125	66		HSK 32 R	2	4x7	24xA 4xA2	AS°		**192344**
Stefani	100	51	60	30 DKN	3	2x6	8xB 2xB1 2xB2	AS°	**192215** ●	**192216** ●
Stefani	100	51	60	30 DKN	3	3x6	12xB 3xB1 3xB2	AS°	**192217** ●	**192218** ●
Stefani	100	66	60	30 DKN	3	2x7	12xB 2xB1	AS°	**192213** ●	
Stefani	100	66	60	30 DKN	3	2x7	12xB 2xB2	AS°		**192214** ●
Stefani	100	66	60	30 DKN	3	3x7	18xB 3xB1	AS°	**192219** ●	
Stefani	100	66	60	30 DKN	3	3x7	18xB 3xB2	AS°		**192220** ●
Turanlar Makine	70	54	30	20 DKN	2	2x5	10xD	AS	**192320** ●	**192321** ●
Turanlar Makine	70	54	30	20 DKN	2	3x5	15xD	AS	**192324**	**192325**
Turanlar Makine	125	54	30	30 DKN	3	3x5	15xE	AS	**192322**	**192323**
Törk Makine	100	65,2	40,6	30 DKN	3	3x6	18xA	AS	**090887** ●	**090888** ●

Spare knives:

BEZ	ABM mm	QAL	Type	Shape	ID
WhisperCut-knife SB14	14x14.2x4.3	DP	A	1	**091052** ●
WhisperCut-knife SB6.7	6.7x14.2x4.3	DP	A1	3	**091082** ●
WhisperCut-knife SB6.7	6.7x14.2x4.3	DP	A2	2	**091081** ●
WhisperCut-knife SB14	14x14.2x4.3	DP	B	1	**091066** ●
WhisperCut-knife SB6.7	6.7x14.2x4.3	DP	B1	3	**091067** ●
WhisperCut-knife SB6.7	6.7x14.2x4.3	DP	B2	2	**091068** ●
WhisperCut-knife SB14	14x14.2x4.3	DP	C	1	**091077** ●
WhisperCut-knife SB6.7	6.7x14.2x4.3	DP	C1	3	**091079** ●
WhisperCut-knife SB6.7	6.7x14.2x4.3	DP	C2	2	**091078** ●
WhisperCut-knife SB14	14x14.2x4.3	DP	D	1	**091071** ●
WhisperCut-knife SB6.7	6.7x14.2x4.3	DP	D1	3	**091073** ●
WhisperCut-knife SB6.7	6.7x14.2x4.3	DP	D2	2	**091072** ●
WhisperCut-knife SB14	14x14.2x4.3	DP	E	1	**091074** ●
WhisperCut-knife SB14	14x14.2x4.3	DP	F	1	**091084** ●

Eroded spare knives for quick and easy knife change.

Spare parts:

BEZ	ABM mm	Machine	ID
Securing part set	40/30x8 M12	Holz-Her 1801/1802	**116011** ●
Spindle nut	38x28 M25x1,5	Felder, Fravol	**066566**
Countersink screw, Torx® 20/59°	M5x11.5		**007899** ●
Spanner wrench	50x5	Holz-Her up to YOM 2016	**117538** ●
Torx® key	Torx® 20		**117503** ●

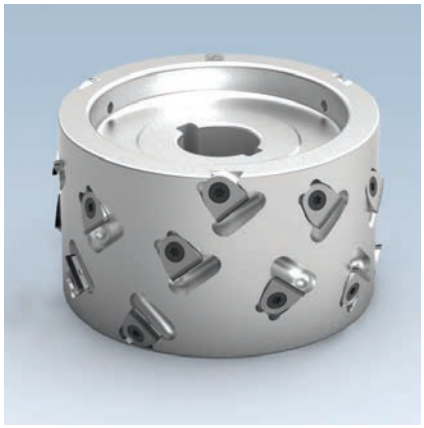


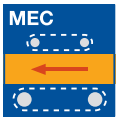









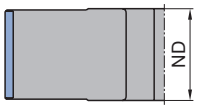

Position of boss (NAL) 1

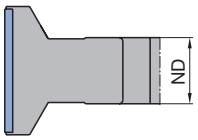

Position of boss (NAL) 2

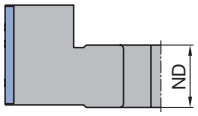

Position of boss (NAL) 3

WhisperCut EdgeExpert jointing / milling cutter - cutterhead design

Application:
For tear-free and noise reduced jointing of workpiece cutting surfaces with and against feed (jump cutting) particularly for sensitive decorative papers, foil coatings and veneers.

Machine:
Edgebanding machines, copy shaping machines, double-end tenoners etc.

Workpiece material:
Chip and fibre boards (MDF etc.) raw, veneered, painted and coated; especially for plastic, paper, HPL and anti-fingerprint coatings. Also suitable for surfaces in mat, high gloss or with relief structures.

Technical information:
DP tipped cutterhead with alternate shear angle for tear-free jointing edges and cutting surface. Increased shear angle for excellent edge quality on sensitive decorative papers, foil coatings and veneers. Tool with knife arrangement S can be used lefthand and righthand and produces a hollow cut for tightly fitting edgebanding. Noise reduced design with up to 5 dB(A) noise reduction and highly efficient chip collection (>95%) through DFC. Significant weight reduction by using an aluminium alloy tool body. Carrier body for multiple use with exchangeable knives. 0.6 mm resharpening area.

Diamaster WhisperCut EdgeExpert - DFC, LowNoise, aluminium alloy tool body
WM 230 2 01

Machine	D mm	SB mm	ND mm	BO mm	NAL	Z	Knife	Type	ID LH	ID RH
Biesse	80	33	53	30 DKN	1	3x4	12xG	S	**192375**	**192375**
Biesse	80	43	53	30 DKN	1	3x6	18xG	S	**192356**	**192356**
Biesse	100	33	75	30 DKN	1	3x4	12xH	S	**192376**	**192376**
Biesse	100	43	75	30 DKN	1	3x6	18xH	S	**192357**	**192357**
Biesse	125	33	40	30 DKN	2	3x4	12xI	S	**192373**	**192373**
Biesse	125	33	40	30 DKN	2	4x4	16xI	S	**192374**	**192374**
Biesse	125	43	40	30 DKN	2	3x6	18xI	S	**192249** ●	**192249** ●
Biesse	125	43	51	30 DKN	2	3x6	15xI 3xJ1	AS°	**192383**	
Biesse	125	43	51	30 DKN	2	3x6	15xI 3xJ2	AS°		**192384**
Biesse	125	43	40	30 DKN	2	4x6	24xI	S	**192358**	**192358**
Biesse	125	63	40	30 DKN	2	3x8	24xJ	S	**192250**	**192250**
Biesse	125	63	51	30 DKN	2	3x9	24xI 3xJ1	AS°	**192392**	
Biesse	125	63	51	30 DKN	2	3x9	24xI 3xJ2	AS°		**192393**
Homag	100	33	40.6	30 DKN	3	3x4	12xH	AS	**192371**	**192372**
Homag	100	43	40.6	25 DKN	3	3x5	15xI	AS	**192361**	**192362**
Homag	100	43	40.6	30 DKN	3	3x5	15xI	AS	**192359** ●	**192360** ●
Homag	125	33	40	30 DKN	2	3x4	12xI	S	**192373**	**192373**
Homag	125	33	40	30 DKN	2	4x4	16xI	S	**192374**	**192374**
Homag	125	43	40	30 DKN	2	3x6	18xI	S	**192249** ●	**192249** ●
Homag	125	43	54	30 DKN	3	3x5	15xJ	AS	**192389**	**192390**
Homag	125	43	40	30 DKN	2	4x6	24xI	S	**192358**	**192358**
IMA	125	43	40	30 DKN	2	3x6	18xI	AS	**192251**	**192252**
IMA	125	43	42	30 DKN	2	4x5	20xJ	AS	**192367**	**192368**
IMA	125	43	57	30 DKN	1	4x5	20xJ	AS	**192369**	**192370**
IMA	125	63	40	30 DKN	3	3x8	24xJ	AS	**192301**	**192302**
SCM	100	43	60	30 DKN	1	3x6	15xH 3xI1	AS°	**192363**	
SCM	100	43	60	30 DKN	1	3x6	15xH 3xI2	AS°		**192364**
SCM	125	43		HSK 32 R	2	4x6	20xI 4xJ1	AS°	**192365**	
SCM	125	43		HSK 32 R	2	4x6	20xI 4xJ2	AS°		**192366**

● available ex stock
□ available at short notice
Instruction manual visit www.leitz.org

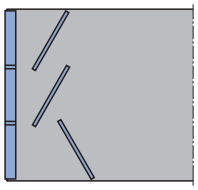

Type AS = asymmetric tip arrangement

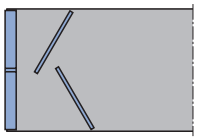

Type S = symmetric tip arrangement

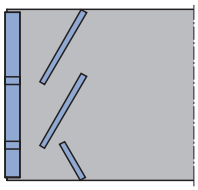

Type AS° = asymmetric tip arrangement with a narrow row of teeth below

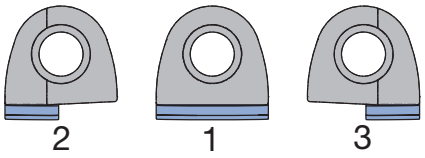

Shape of WhisperCut spare knives
SB 6.7 / 14 mm

Spare knives:

BEZ	ABM mm	QAL	Type	Shape	ID
WhisperCut-knife SB14	14x14.2x4.3	DP	G	1	**091085** ●
WhisperCut-knife SB14	14x14.2x4.3	DP	H	1	**091086** ●
WhisperCut-knife SB14	14x14.2x4.3	DP	I	1	**091087** ●
WhisperCut-knife SB6,7	6.7x14.2x4.3	DP	I2	2	**091093** ●
WhisperCut-knife SB6,7	6.7x14.2x4.3	DP	I1	3	**091094** ●
WhisperCut-knife SB14	14x14.2x4.3	DP	J	1	**091088** ●
WhisperCut-knife SB6,7	6.7x14.2x4.3	DP	J2	2	**091095** ●
WhisperCut-knife SB6,7	6.7x14.2x4.3	DP	J1	3	**091096** ●

Spare parts:

BEZ	ABM mm	ID
Countersink screw, Torx® 20/59°	M5x11.5	**007899** ●
Torx® key	Torx® 20	**117503** ●

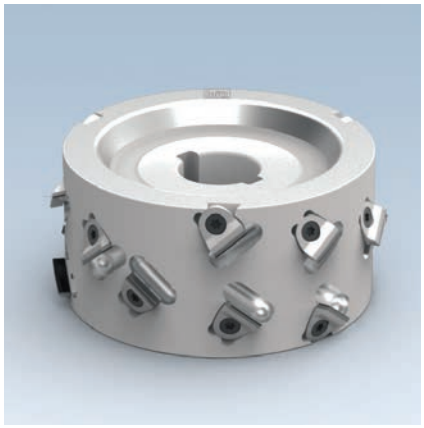

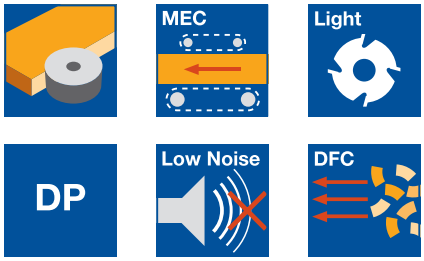

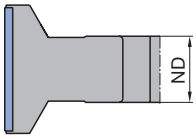

Position of boss (NAL) 2

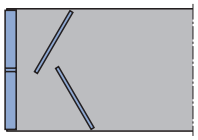

Type S = symmetric tip arrangement

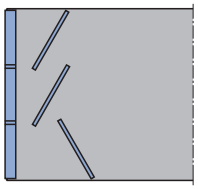

Type AS = asymmetric tip arrangement

WhisperCut PLUS EdgeExpert jointing / milling cutter - cutterhead design

Application:
For tear-free and noise reduced jointing of workpiece cutting surfaces with and against feed (jump cutting) particularly for sensitive decorative papers, foil coatings and veneers.

Machine:
Edgebanding machines, copy shaping machines, double-end tenoners etc.

Workpiece material:
Chip and fibre boards (MDF etc.) raw, veneered, painted and coated; especially for plastic, paper, HPL and anti-fingerprint coatings. Also suitable for surfaces in mat, high gloss or with relief structures.

Technical information:
DP tipped cutterhead with alternate shear angle for tear-free jointing edges and cutting surface. Increased shear angle for excellent edge quality on sensitive decorative papers, foil coatings and veneers. Tool with knife arrangement S can be used lefthand and righthand and produces a hollow cut for tightly fitting edgebanding. Noise reduced design with up to 5 dB(A) noise reduction and highly efficient chip collection (>95%) through DFC. Significant weight reduction by using an aluminium alloy tool body. Carrier body for multiple use with exchangeable knives. Resharpenable up to 12 times.

Diamaster WhisperCut PLUS EdgeExpert - DFC, LowNoise, aluminium alloy tool body
WM 230 2 02

Machine	D mm	SB mm	ND mm	BO mm	NAL	n_{max} min^{-1}	Z	Type	ID LH	ID RH
Biesse	125	43	40	30 DKN	2	13700	3x6	S	**192394**	**192394**
Homag	125	43	40	30 DKN	2	13700	3x6	S	**192394**	**192394**
IMA	125	43	40	30 DKN	2	13700	3x6	AS	**192395**	**192396**

● available ex stock
□ available at short notice
Instruction manual visit www.leitz.org

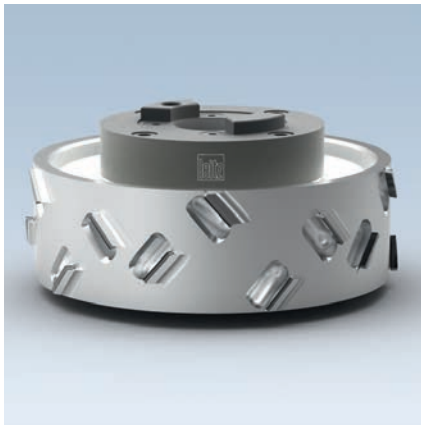


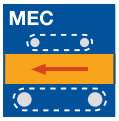









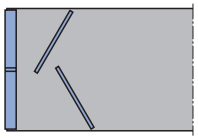

Type S = symmetric knife arrangement

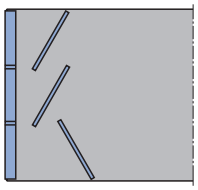

Type AS = asymmetric tip arrangement

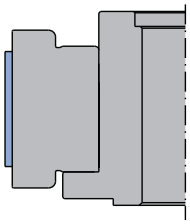

Position of boss (NAL) 1

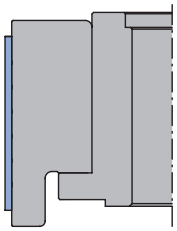

Position of boss (NAL) 2

Jointing / milling cutter on hydro sleeve

Application:
For tear-free and low noise jointing of workpiece edges side with and against feed (jump cutting).

Machine:
Edgebanding machines with zero joint technology.

Workpiece material:
Chip and fibre board (MDF etc.) uncoated, veneered, plastic and paper coated, fibre reinforced plastics (GFRP, CFRP etc.).

Technical information:
Increase of the processing quality through zero clearance hydro adaptor. Tool with alternate shear angle for tear-free jointing edge and straight cutting surface. Low noise design with noise reduction up to 5 dB(A) and highly efficient chip collection (>95%). Tool with knife arrangement S produces hollow cut for tightly closing edgebanding.

Diamaster PRO mounted on hydro sleeve
HF 230 2, HF 230 2 DP

Machine	D mm	SB mm	BO mm	n_{max} min^{-1}	NAL	Z	Type	ID LH	ID RH
Homag	125	43	30	13600	1	5x4	S	**192133**	**192134**
Homag	125	63	30	13600	1	5x6	S	**192135**	**192136**
Homag	150	43	30	13600	1	5x4	S	**192205** □	**192206** □
Homag	150	63	30	13600	1	5x6	S	**192207** □	**192208** □

Diamaster WhisperCut EdgeExpert mounted on hydro sleeve
HM 230 2 01

Machine	D mm	SB mm	BO mm	n_{max} min^{-1}	NAL	Z	Type	ID LH	ID RH
IMA	125	43	30	13700	1	4x6	AS	**192259**	**192258**
IMA	125	63	30	13700	1	4x8	AS	**192261**	**192260**
IMA	150	43	30	13700	1	4x6	AS	**192263**	**192262**
IMA	150	63	30	13700	1	4x8	AS	**192265**	**192264**

Diamaster PRO mounted on hydro sleeve, IMA aggregate 08.379
WM 230 2 01

Machine	D mm	SB mm	BO mm	n_{max} min^{-1}	NAL	Z	ID LH	ID RH
IMA	125	65	30	13700	2	4x7	**192313**	**192312**
IMA	125	43,5	30	13700	2	4x5	**192315**	**192314**

Spare parts:

BEZ	ABM mm	ID
Securing part	for HF-spindle HF 30	**066563** ●
Allen key	SW 5, L 150	**005501** ●

● available ex stock
□ available at short notice
Instruction manual visit www.leitz.org

Process	Hogging along and across the grain, sizing.
Workpiece materials	Chipboard and fibre materials (MDF) uncoated, with plastic or veneer coating.
Machines	Single sided, double-sided machines and double-end tenoners.
Application	Both sizing processes “double hogging” and “scoring/hogging” require two basic hogging types with different cutting geometries: **Diamaster DT Premium** – Double hogging with feed and negative rake angle and **Diamaster DT Premium Score** – Scoring/cutting with against feed with positive cutting angle.

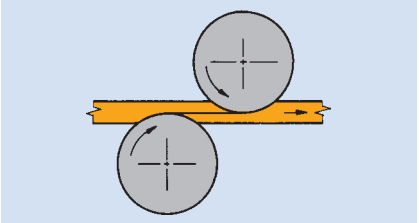

Double hogging: Both hoggers cut with feed.

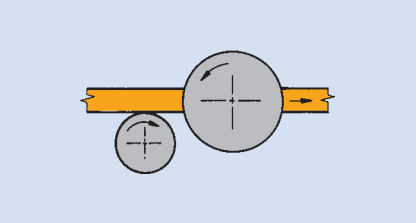

Scoring/hogging: Scoring saw cuts with feed, hogger against feed.

Compact hogger DT Premium	Manufacturers are facing major challenges due to their customers demanding changing quantities as well as requesting a wide variety of carrier and decorative materials to be used in panel production. The new DT Premium compact hogger is the solution for increasing productivity thanks to its long tool life – with perfect quality on the edge and cutting surface.



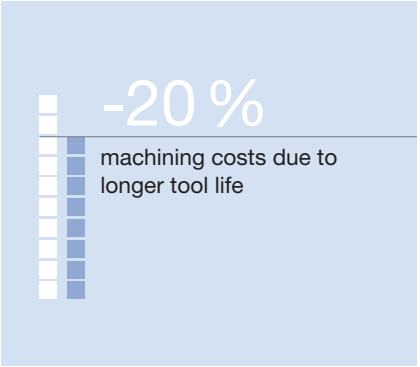

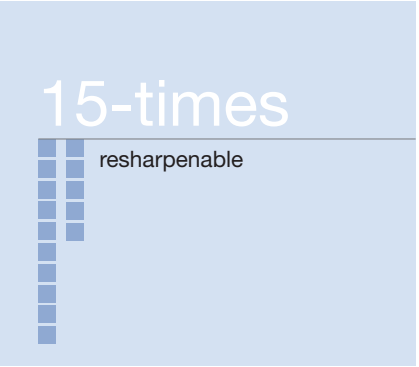

Productivity & efficiency	Maximum economic efficiency through long tool life – Long tool life even under difficult operating conditions thanks to new tooth shape – Reduction of set-up costs due to long tool life – Efficient chip removal due to innovative gullet geometry and integrated chipbreaker – Cost efficient processing of various materials – Ideal also for batch size 1 due to adapted cutting geometries – Resharpenable up to 15 times through larger resharpening area
Quality	Perfect edges and cutting surfaces – Excellent edge quality and smooth cutting surfaces through adapted cutting geometries – Clean workpiece finishes due to efficient chip removal with DFC®-Technology – Constant cutting width over the entire life cycle
Sustainability	Longer tool life time, less dust and noise – Reduced noise due to special tool design – Reduction of noise and vibration through damping elements – Longer tool life time through larger resharpening area

Designs

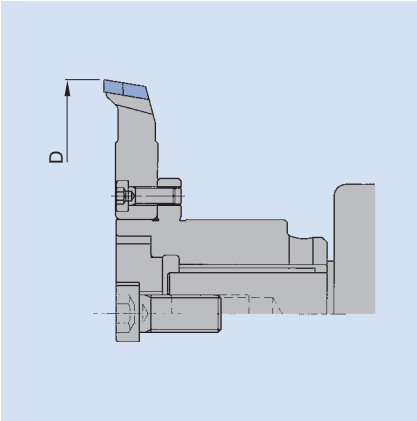

Tooth shape: top bevel decreasing.
Hogger on standard flange.

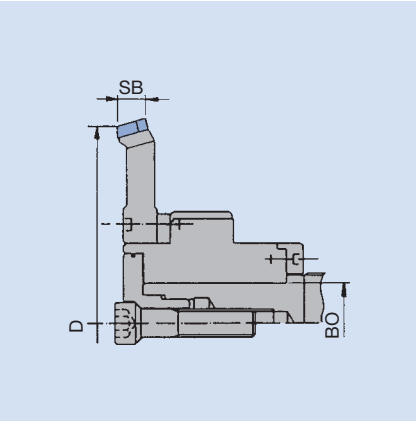

Tooth shape: top bevel increasing.
Hogger on HF hydro sleeve.

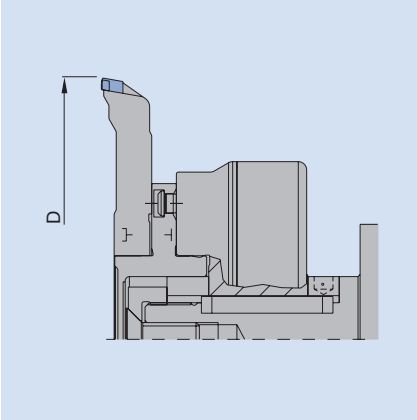

Tooth shape: top bevel decreasing.
Hogger on quick change sleeve.

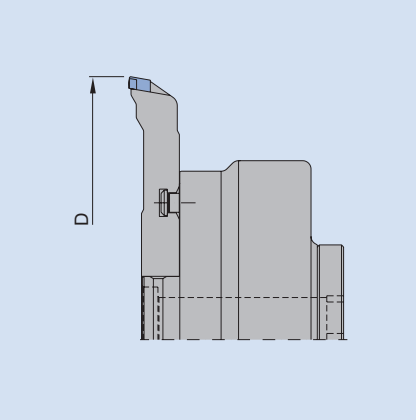

Tooth shape: top bevel decreasing.
Hogger on hydro quick change sleeve.



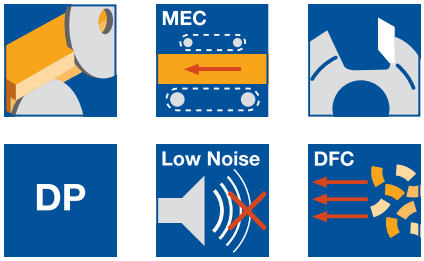

Order example:
Hogging set D-250 mm, Z 36, right
Hogging set consisting of:
DT Premium hogger D-250 ID **190393**
Hydro clamping sleeve ID **061702**

Special information:
Including assembly, machine model

Tooth shape 1 (ZF 1):
For processing different materials (batch size 1), coated wood materials such as HPL, melamine, high gloss.

Tooth shape 2 (ZF 2):
For processing veneers, paper, honeycomb panels.

Diamaster DT *Premium*

Application:
For hogging along and across grain - sizing - especially for **hogging / hogging**.

Machine:
Double-end tenoners, edgebanding machines etc.

Workpiece material:
Chip and fibre board (MDF etc.) uncoated, veneered, plastic and paper coated, light construction panels (honeycomb).

Technical information:
Maximum economic efficiency through long tool life even in different materials (batch size 1). Up to 15 times resharpenable and constant cutting width over the entire life cycle. Perfect edge quality and smooth cutting surfaces through adapted cutting geometries. Clean workpiece finishes due to efficient chip removal with DFC-technology. Hogger as standard with 4 pinholes reference diameter 100 and quick clamping system 160 (BO 60) and 192 (BO 80).

Diamaster DT Premium
HZ 210 2

D mm	SB mm	BO mm	ZF	Z	v_f* m min^{-1}	ID LH	ID RH
250	10	60	1	24	30	**190382** □	**190383** □
250	10	60	1	36	40	**190390** □	**190391** □
250	10	60	1	48	50	**190398** ●	**190399** ●
250	10	60	1	60	80	**190406**	**190407**
250	10	60	2	24	30	**190384** □	**190385** □
250	10	60	2	36	40	**190392** □	**190393** □
250	10	60	2	48	50	**190400** □	**190401** □
250	10	80	1	24	30	**190410**	**190411**
250	10	80	1	36	40	**190418**	**190419**
250	10	80	1	48	50	**190426** □	**190427** □
250	10	80	2	24	30	**190412**	**190413**
250	10	80	2	36	40	**190420**	**190421**
250	10	80	2	48	50	**190428** □	**190429** □

Further dimensions on request.

Standard flanged sleeves, hydro clamping elements, quick clamping and hydro quick clamping sleeves, see section Clamping Systems.

* Recommended feed rate.

● available ex stock
□ available at short notice
Instruction manual visit www.leitz.org





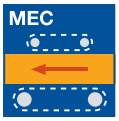



DP

Compact hogger

Application:
For hogging along and across grain - for sizing applications in double hogging process (**hogging / hogging**).

Machine:
Double-end tenoners, edgebanding machines etc.

Workpiece material:
Particle and fibre materials (MDF etc.) uncoated, veneered, plastic and paper coated, lightweight panels (honeycomb).

Technical information:
Resharpenable 10 times. Hogger as standard with 4 pinholes reference diameter 100 and quick clamping system 160 (BO 60) and 192 (BO 80).

Compact hogger
HZ 210 2

D mm	SB mm	BO mm	Z	v_f* m min^{-1}	ID LH	ID RH
250	6,5	60	35	35	**190478** ●	**190479** ●
250	6,5	60	45	45	**190480** ●	**190481** ●
250	6,5	60	55	55	**190482**	**190483**
250	6,5	80	35	35	**190484**	**190485**
250	6,5	80	45	45	**190486**	**190487**
250	6,5	80	55	55	**190488**	**190489**

Standard flanged sleeves, hydro clamping, quick clamping and hydro quick clamping sleeves, see Lexicon section Clamping Systems.

* Recommended feed rate for coated chipboard materials and fibre materials.

Process

Hogging along and across grain with/without scoring sawblades.

Workpiece materials

Solid wood, wood derived materials and composite materials.

Machines

Multi-rip saws, double-end tenoners, window making machines, edgebanding machines.

Application

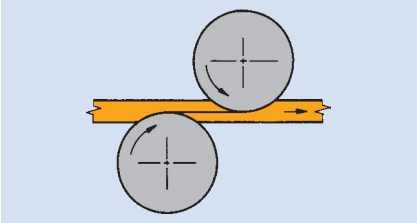

Double hogging:
Both hoggers cut with feed.

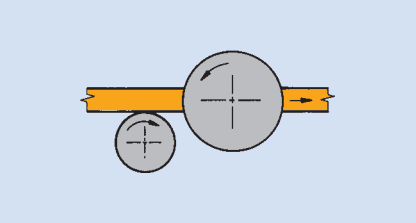

Scoring/hogging:
Scoring saw cuts with feed, hogger against feed.

Recommended tooth shape hogger sawblades

Workpiece material		FZ	ES	WZ
Softwood and hardwood	along grain	●		□
	across grain		●	●
Laminated wood	along grain	□	●	
	across grain		●	●
Chip/fibre materials	without coating	●	□	
	plastic coated	●	□	
	veneered		●	●
	paper coated		●	□
Composite material	HPL-coated	●	□	
	HDF, MDF veneered		●	□

● suitable
□ partly suitable

Cutting width and RPM

Tool*	D/mm	SB/mm	RPM max.
Segment hogger	250	25 – 50	7200 m/min^{-1}
	300	30 – 60	6000 m/min^{-1}
	350	35 – 70	5100 m/min^{-1}

* A larger sawblade diameter is recommended for veneered chipboard, fibre materials and laminated wood (e.g. hogger D 250 mm –> recommended sawblade D 260 mm).

Segment hogger

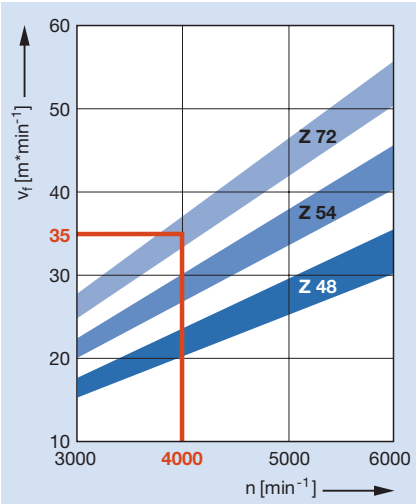

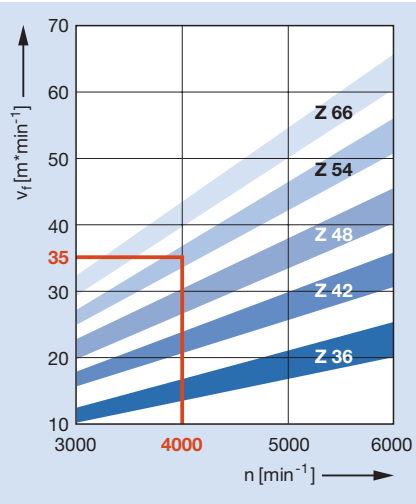

Feed speed v_f in relation to the number of teeth Z and RPM n.

Segment hogger

Segment hoggers are a modular design. Segment hoggers are used, depending on the diameter, for hogging widths from 25 to 70 mm. Hoggers or segment hoggers combined with different circular sawblades are suitable for cutting the following materials along and across the grain:
– Solid wood
– Wood derived materials without coating
– Wood derived materials with coating, with veneer, with paper etc.
– Composite materials

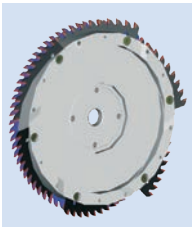

Cross cut

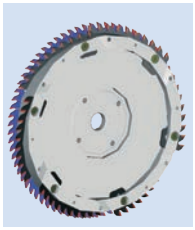

Length cut

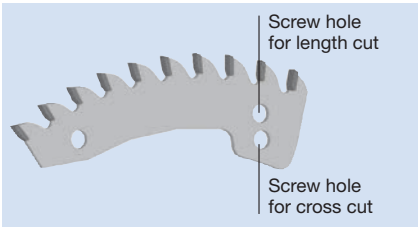

The hogging segments in segment hoggers are set either for length and or cross cut. The cross cut setting reduces the risk of breaking the corner of the workpiece when cross cutting against the feed.
Segment hoggers with up to 12 segments are used for edging and sizing on wood-derived material production lines (e.g. Siempelkamp, Kontra etc.). A special segment hogger design has been developed for the finish cut on wood derived material production lines.

Saw hogger

Saw hoggers, single tools or assemblies with cutting widths of 6.35 - 12.00 mm are used for hogging along and across the grain and to size solid wood on finger jointing machines.

Assembly design/examples

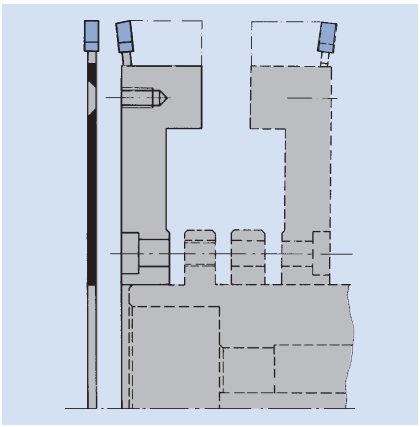

Segment hogger with extension hogger.





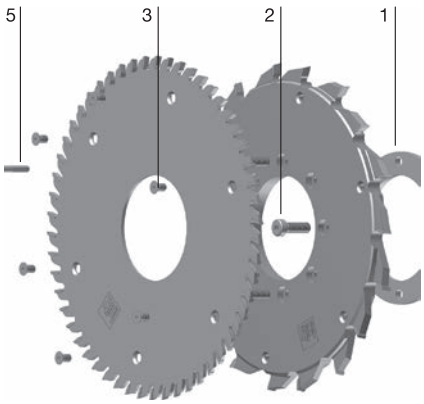

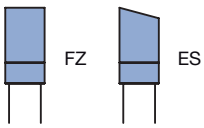

Hoggers

Application:
For tear-free sizing along and across grain. Machining against feed only combined with scoring sawblade. Defined trimming in front of the finger cut for adjusting the finger fit.

Machine:
Double-end tenoner, finger joint machine with trimming aggregate.

Workpiece material:
Solid wood and wood derived materials.

Technical information:
Steel tool body with HW circular sawblade and hogger elements mounted on flanged sleeve. Can be extended for larger hogger widths. Single sided bevel tooth shape reduces tear outs.

Basic hogger - steel tool body without flanged sleeve
WZ 210 2 01, WZ 210 2 02

BEZ	D mm	SB mm	BO mm	QAL	Z	ID LH	ID RH
Basic hogger	251	12	80	HW	18	**062602** ●	**062603** ●
Basic hogger	301	12	80	HW	24	**062604**	**062605**
Extension cutter	251	12	80	HW	18	**062652**	**062653**

Spare parts:

Part-no.	BEZ	ABM mm	BEM	ID
1	Spacer	115x5x80		**028046** ●
2	Cylindrical screw with ISK	M8x20		**005946** ●
3	Countersink screw, Torx® 20	M6x10	Torx® 20	**006083** ●
4	Screw with ISK	M8x17	for D = 250, 350, 305, 355	**006237** ●
5	Allen key	SW 6		**005447** ●
6	Torx® key	Torx® 20		**117503** ●

Circular sawblade
WK 800 2 09, WK 800 2 38, WK 801 2, WK 801 2 05

D mm	SB mm	BO mm	Z	ZF	QAL	ID LH	ID RH
250	4,4	80	54	FZ	HW	**061825** ●	**061826** ●
250	4,4	80	54	ES	HW	**061837** ●	**061838** ●
250	4,4	80	72	FZ	HW	**061945** ●	**061946** ●
260	4,4	80	72	ES	HW	**061860** □	**061861** □
260	4,4	80	72	FZ	HW	**061947** ●	**061948** ●
300	4,4	80	48	FZ	HW	**061827** ●	**061828** ●

● available ex stock
□ available at short notice
Instruction manual visit www.leitz.org





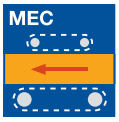



HW

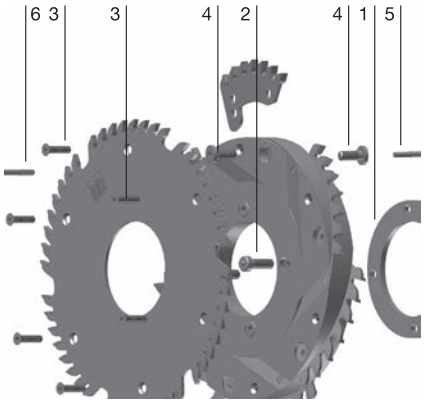

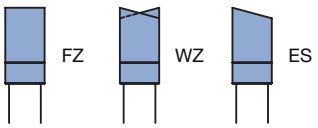

Segment hoggers

Application:
For tear-free sizing along and across grain. Machining against feed only combined with scoring sawblade. Defined trimming in front of the finger cut for adjusting the finger fit.

Machine:
Double-end tenoners, finger joint machine with trimming aggregate, plug cutter.

Workpiece material:
All types of solid wood, chip and fibre boards (MDF ect.) uncoated, veneered, plastic and paper coated.

Technical information:
Steel tool body with HW circular sawblade and segment hogging elements. Staggered cut through six hogger segments. Mounted on flanged sleeve. Can be extended for larger hogging width. Single sided bevel tooth shape to improve the cutting quality and to reduce tear outs.

Steel basic and extension hoggers without flanged sleeve
WZ 300 2

D mm	SB mm	BO mm	Z	ZF	QAL	ID LH	ID RH
250	26,0	80	6x7	FZ	HW	**064410** ●	**064411** ●
300	31,5	30	6x9	FZ	HW	**064412**	**064413**
350	36,5	30	6x10	FZ	HW	**064414**	**064415**

Spare parts:

Part-no.	BEZ	ABM mm	SB mm	QAL	ZF	Z	BEM	ID
	Hogging segment	D 250	5,7	HW	FZ	7		**064958** ●
	Hogging segment	D 250	5,7	HW	FZ	7		**064959** ●
	Hogging segment	D 300	5,7	HW	FZ	9		**064960** ●
	Hogging segment	D 300	5,7	HW	FZ	9		**064961** ●
	Hogging segment	D 350	5,7	HW	FZ	10		**064962** ●
	Hogging segment	D 350	5,7	HW	FZ	10		**064963** ●
1	Spacer	115x5x80						**028046** ●
2	Cylindrical screw with ISK	M8x20						**005946** ●
3	Countersink screw, Torx® 20	M6x10					Torx® 20	**006083** ●
4	Screw with ISK	M8x17					for D = 250, 350, 305, 355	**006237** ●
5	Allen key	SW 6						**005447** ●
6	Torx® key	Torx® 20						**117503** ●

Spare circular sawblade for segment hogging set
WK 800 2 45, WK 800 2 46, WK 801 2, WK 850 2 45

D mm	SB mm	BO mm	Z	ZF	QAL	ID LH	ID RH
250	4,4	80	48	FZ	HW	**061831** ●	**061832** ●
250	4,4	80	48	ES	HW	**061878**	**061879**
250	4,4	80	66	FZ	HW	**061953** ●	**061954** ●
260	4,4	80	48	ES	HW	**061963** ●	**061964** ●
260	4,4	80	66	ES	HW	**061965** ●	**061966** ●
300	4,4	30	42	FZ	HW	**061833**	**061834**
300	4,4	30	66	FZ	HW	**061055** ●	**061056** ●
350	3,2	30	66	WZ	HW	**058223** ●	**058224** ●



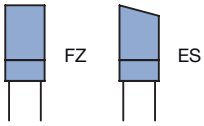

DFC segment hogger available on special request.

Spare circular sawblade for DFC segment hogger
WK 801 2, WK 801 2 05

D mm	SB mm	BO mm	Z	ZF	QAL	ID LH	ID RH
250	4,4	80	54	ES	HW	**061837** ●	**061838** ●
260	4,4	80	72	ES	HW	**061860** □	**061861** □

Circular sawblades:
Tooth shape **ES** is optimised to cut across grain on softwood, hardwood, wood derived materials, veneered and paper coated and veneered composite materials.

Segments for DFC hogger (6 pieces / hogger)
TM 170 0

D mm	Z	ZF	QAL	ID LH	ID RH
246	5	FZ	HW	**064974** ●	**064975** ●

DFC segment hogger available on special request.

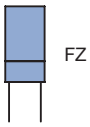

Circular sawblade for non-Leitz segment hoggers
WK 800 2 46

Typ	D mm	SB mm	BO mm	Z	ZF	QAL	ID LH	ID RH
1	250	4	80	48	FZ	HW	**061870** ●	**061871** ●
1	250	4	100	48	FZ	HW	**061872** □	**061873** □

Type 1 for Leuco.

Segments for non-Leitz segment hogger
TM 170 0

Typ	für D mm	SB mm	Z	ZF	QAL	ID LH	ID RH
1	200/250	4	4	FZ	HW	**064976** ●	**064976** ●

Type 1 for Leuco.

● available ex stock
□ available at short notice
Instruction manual visit www.leitz.org

Grooving with feed

Straight cut composite tool for grooving with feed (MEC).

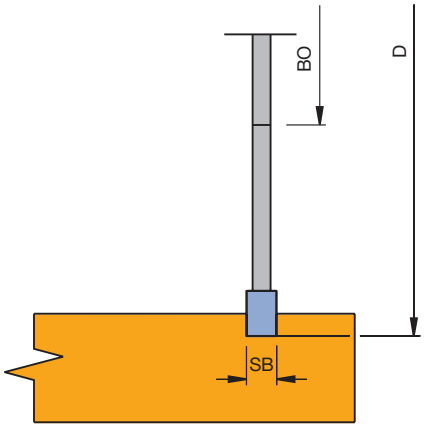

Cutting rear panel grooves

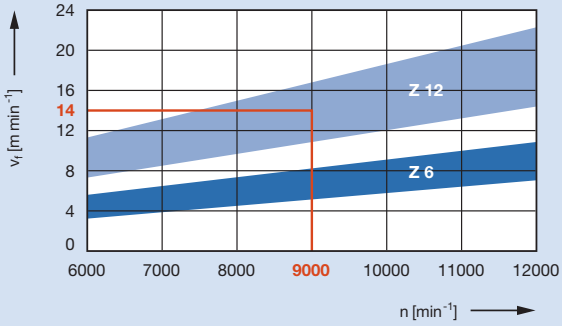

Feed speed v_f depending on number of teeth Z and RPM n for wood derived materials (top layer)

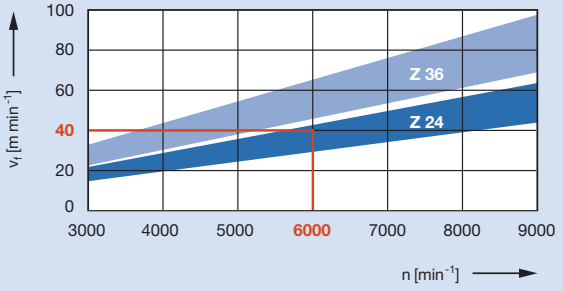

Feed speed v_f depending on number of teeth Z and RPM n for wood derived materials (middle layer)

Grooving against feed

For tear-free cutting of different grooving widths on spindle moulders, moulders, edgebanding machines and double-end tenoners in uncoated and coated wood derived materials.

Adjustment of the cutting width with spacers (adjustment steps 0.1 mm). High chip collection by working against feed. Feed speed up to 40 m min^{-1}. Constant grooving width and distances to the machine chain also after regrinding. Special cutting geometry for tear-free cuts. Suitable to mount on sleeves with bore 30, 35 and 40 mm. Tipping height 6.0 mm.

Tools for grooving against feed available on request.

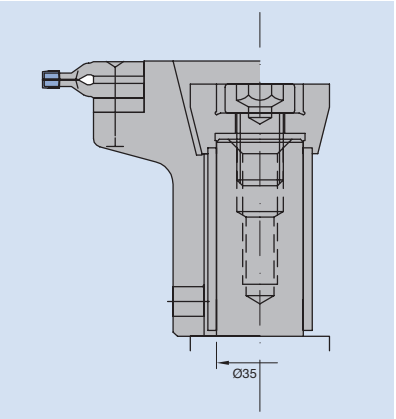

Assembly example:
Spindle 30 KN or DKN

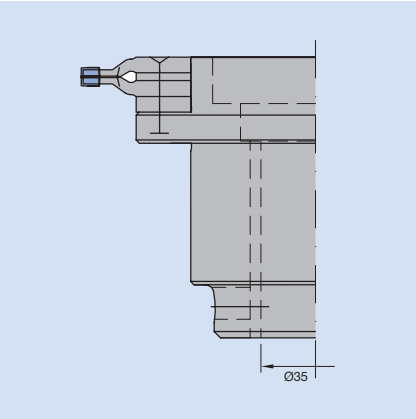

Assembly example:
Spindle 35 KN or DKN





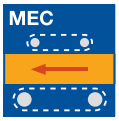



HW



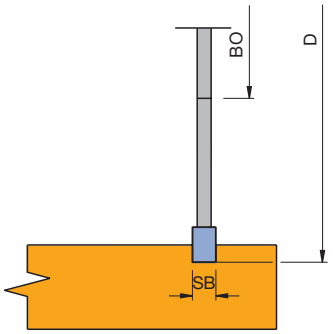

Cutting the back panel groove

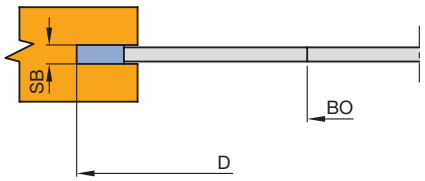

Grooving the edge

Grooving cutter for mechanical feed

Application:
Grooving with feed (climb cut).

Machine:
Moulders and double-end tenoners.

Workpiece material:
Solid wood, uncoated, coated and veneered wood derived materials.

HW tipped
WF 100 2, WF 100 2 02, WF 100 2 03

D mm	SB mm	TDI mm	BO mm	BO_{max} mm	Z	n_{max} min^{-1}	ID
80	4,0		16 DKN		3	12000	**182000**
125	1,5	0,8	30	50	12	13700	**020145** ●
125	2,0	1,2	30	50	12	13700	**020147** ●
125	2,5	1,4	30	50	12	13700	**020149** ●
125	3,0	2,0	30	50	12	13700	**020150** ●
125	3,5	2,2	30	50	12	13700	**020151** ●
125	4,0	2,5	30	50	12	13700	**020152** ●
125	4,5	3,0	30	50	12	13700	**020153** ●
125	5,0	3,5	30	50	12	13700	**020191** ●
125	6,0	4,5	30	50	12	13700	**020192** ●
125	7,0	5,0	30	50	12	13700	**020193** ●
125	8,0	6,0	30	50	12	13700	**020194** ●
125	10,0	7,0	30	50	12	13700	**020196** ●
150	1,5	0,8	30	60	18	11400	**020164** ●
150	2,0	1,2	30	60	18	11400	**020166** ●
150	2,5	1,4	30	60	18	11400	**020168** ●
150	3,0	2,0	30	60	12	11400	**020154** ●
150	3,0	2,0	30	60	18	11400	**020169** ●
150	3,5	2,2	30	60	12	11400	**020155** ●
150	4,0	2,5	30	60	12	11400	**020156** ●
150	4,0	2,5	30	60	18	11400	**020170** ●
150	4,5	3,0	30	60	12	11400	**020157** ●
150	5,0	3,5	30	60	12	11400	**020158** ●
150	5,0	3,5	30	60	18	11400	**020171** ●
150	6,0	4,5	30	60	12	11400	**020159** ●
150	6,0	4,5	30	60	18	11400	**020172** ●
150	7,0	5,0	30	60	12	11400	**020160** ●
150	8,0	6,0	30	60	12	11400	**020161** ●
150	8,0	6,0	30	60	18	11400	**020173** ●
150	8,5	7,0	30	60	18	11400	**020319**
150	10,0	7,0	30	60	12	11400	**020163** ●
150	10,0	7,0	30	60	18	11400	**020174** ●
180	2,0	1,2	30	70	18	9500	**020202** ●
180	2,5	1,4	30	70	18	9500	**020203** ●
180	3,0	2,0	30	70	18	9500	**020204** ●
180	3,5	2,2	30	70	18	9500	**020205** ●
180	4,0	2,5	30	60	18	9500	**020197** ●
180	5,0	3,5	30	60	18	9500	**020198** ●
180	6,0	4,5	30	60	18	9500	**020199** ●
180	8,0	6,0	30	60	18	9500	**020200** ●
180	8,5	6,0	30	60	18	9500	**020320** ●
180	10,0	7,0	30	60	18	9500	**020201** ●
200	2,0	1,2	35	80	18	8500	**020299**
200	3,0	2,0	35	80	18	8500	**020302** ●
200	4,0	2,5	35	80	18	8500	**020303** ●
200	5,0	3,5	35	80	18	8500	**020304** ●
200	6,0	4,5	35	80	18	8500	**020305** ●
200	8,0	6,0	35	80	18	8500	**020306**
200	8,5	6,0	30	80	18	8500	**020321**
200	10,0	7,0	35	80	18	8500	**020307** ●

● available ex stock
□ available at short notice
Instruction manual visit www.leitz.org

DP

DP tipped
WF 100 2, WF 100 2 DP

D mm	SB mm	TDI mm	BO mm	BO_{max} mm	NLA mm	Z	ZF	QAL	n_{max} min^{-1}	ID
80	4,0		16			3	FZ	DP		**192334**
150	4,0	2,5	30	60		18	FZ	DP	11400	**192304**
180	4,0	2,5	30	60		24	FZ	DP	9500	**192305**
180	8,5	6,5/8,5	80		4/9/100 4/9/100	35	WZ/WZ/ FZ	DP	9500	**190755**
200	4,0	2,5	30	80		24	FZ	DP	8500	**192306**

DP tipped, mounted on flanged sleeve ID 61681
SF 500 2

D mm	SB mm	BO mm	DKN mm	Z	ZF	QAL	n_{max} min^{-1}	ID
180	8,5	35	10x43	35	WZ/WZ/FZ	DP	9500	**190756** □

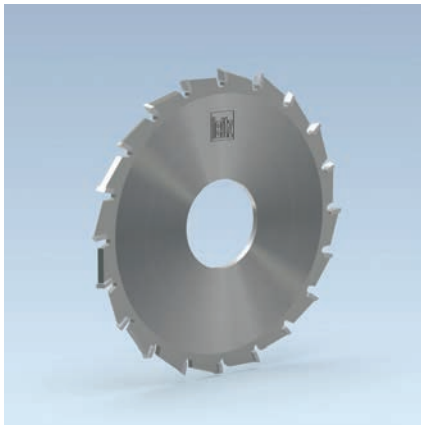









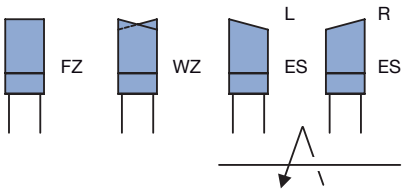

Circular sawblade for end trim on edgebanding machines

Application:
For low noise edgebanding trim cuts.

Machine:
Single or double-sided edgebanding machines and double-end tenoners.

Workpiece material:
Veneered, melamine and plastic edging.

Technical information:
Tooth geometries and pitch designed for optimum cutting quality.
Veneered and plastic edging:
Edging thickness ≥ 2.0 mm - crosscut saw ES pos.
Edging thickness < 2.0 mm - crosscut saw ES neg.

Circular sawblade - LowNoise, ES
SK 499 2, WK 101 2, WK 301 2, WK 311 2, WK 321 2, WK 331 2, WK 372 2

	Machine	D	SB	BO	NLA	Z	ZF	ID	ID
		mm	mm	mm	mm			LH	RH
	Biesse	115	3,2	52	3/7,1/64	30	ES pos.	**166420**	**166421**
	Biesse	130	3,6	30	4/7,4/46	24	ES pos.	**166424** ●	**166425** ●
	Biesse	140	3,2	30	3/8/56	36	ES pos.	**166427** ●	**166426** ●
	Biesse	150	3,5	30	3/8/56	36	ES neg.	**166484** ●	**166485** ●
	Brandt	100	2,6	32		30	ES neg.	**166400** ●	**166401** ●
	Brandt	100	2,6	32		30	ES pos.	**166429** ●	**166430** ●
	Brandt	125	2,6	32		30	ES neg.	**166403** ●	**166404** ●
	Cehisa	100	3,0	32		30	ES pos.	**166436**	**166437**
	Fravol	100	3,2	22		24	ES pos.	**166407** ●	**166406** ●
	Fravol	100	2,6	30		30	ES pos.	**166476** ●	**166477** ●
	Fravol	125	3,2	22		30	ES pos.	**166411** ●	**166410** ●
	Holz-Her	110	3,6	22		16	ES pos.	**166439** ●	**166440** ●
	Homag	80	3,2	34	8/4,2/44	30	ES pos.	**166443** ●	**166444** ●
*	Homag	100	3,0	32		20	ES pos.	**166445** ●	**166446** ●
	Homag	100	3,2	32		20	ES neg.	**166449**	**166450** ●
	Homag	100	2,6	32		30	ES neg.	**166400** ●	**166401** ●
	Homag	100	2,6	32		30	ES pos.	**166429** ●	**166430** ●
	Homag	110	1,7	40	4/5,5/52	30	FZ/TR pos.	**166453**	**166453**
*	Homag	120	3,2	40		30	ES pos.	**166454**	**166455**
	Homag	125	2,6	32		30	ES neg.	**166403** ●	**166404** ●
	SCM	150	3,8	35	4/6,5/50	30	ES pos.	**166468** ●	**166469** ●
	Wilmsmeyer	100	3,2	32		20	ES neg.	**166449**	**166450** ●

* = For 2 part set SK 499 2 use mounting flange ID **066750**.

● available ex stock
□ available at short notice
Instruction manual visit www.leitz.org

Workpiece material:
Softwood, hardwood edging.

Technical information:
Tooth geometries and pitch designed for optimum cutting quality.
Solid wood edging and multi-purpose application:
Edging thickness ≥ 2.0 mm - crosscut saw WZ pos.
Edging thickness < 2.0 mm - crosscut saw WZ neg.

Circular sawblade - LowNoise, WZ
WK 250 2, WK 350 2, WK 360 2, WK 370 2, WK 380 2, WK 850 2

Machine	D	SB	BO	NLA	Z	ZF	ID	ID
	mm	mm	mm	mm			LH	RH
Biesse	100	3,2	30		20	WZ pos.	**166478** ●	**166478** ●
Biesse	160	3,2	20		48	WZ pos.	**166428** ●	**166428** ●
Brandt	100	2,6	32		30	WZ pos.	**166431** ●	**166431** ●
Brandt	125	2,4	32		24	WZ pos.	**166402** ●	**166402** ●
EBM	100	2,4	22	2/4/30	20	WZ neg.	**166405** ●	**166405** ●
Felder	100	3,2	22		20	WZ pos.	**166438** ●	**166438** ●
Felder	110	3,2	30		20	WZ pos.	**166475** ●	**166475** ●
Hebrock	100	2,4	22	2/4/30	20	WZ neg.	**166405** ●	**166405** ●
Holz-Her	110	3,6	22		20	WZ pos.	**065663** ●	**065663** ●
Holz-Her	120	3,2	22		20	WZ pos.	**166474** ●	**166474** ●
Holz-Her	140	3,2	22		36	WZ pos.	**166441** ●	**166441** ●
Holz-Her	160	3,2	20		48	WZ pos.	**166428** ●	**166428** ●
Holz-Her	160	3,2	30		24	WZ pos.	**065664** ●	**065664** ●
Homag	100	3,6	32		20	WZ pos.	**166451**	**166451**
Homag	100	2,6	32		30	WZ pos.	**166431** ●	**166431** ●
Homag	110	3,6	32		20	WZ pos.	**166452**	**166452**
Homag	120	3,6	40	8/5,6/52	24	WZ pos.	**166419** ●	**166419** ●
Homag	120	3,2	40	8/5,6/52	36	WZ pos.	**166456** ●	**166456** ●
Homag	120	3,6	40	8/5,6/52	36	WZ pos.	**166457** ●	**166457** ●
Homag	125	2,4	30	8/6,5/48	36	WZ pos.	**058234** ●	**058234** ●
Homag	125	2,4	32		24	WZ pos.	**166402** ●	**166402** ●
Homag	170	3,2	30	8/5,6/52	36	WZ pos.	**166412** ●	**166412** ●
Homag	180	3,2	30	4/5,6/52	54	WZ pos.	**166460**	**166460**
IMA	160	3,2	22		48	WZ neg.	**166414** ●	**166414** ●
IMA	180	3,2	22		48	WZ neg.	**166464**	**166464**
IMA 08.415	180	3,5	22		42	WZ neg.	**166415** ●	**166415** ●
IMA 08.492	160	3,0	22		36	WZ pos.	**166413**	**166413**
Ott	140	3,2	16		36	WZ pos.	**166466** ●	**166466** ●
Raimann	100	3,6	32		20	WZ pos.	**166451**	**166451**
SCM	90	2,6	20		20	WZ	**166483**	**166483**
SCM	107	6,0	40		12	R3	**166481**	**166482**
SCM	115	3,2	30		30	WZ pos.	**166416** ●	**166416** ●
SCM	125	3,2	30		24	WZ	**166480** ●	**166480** ●

Working processes	Finishing plastic, veneered and solid wood edges of wood material boards. – Pre-cutting to remove asymmetric edge protrusions on top and bottom edges and edge trimming solid wood edges. – Profiling a bevel or round edge on top and bottom edges. – Profiling a bevel and round edges on top and bottom edges and front and back. – Profile scrapers to remove knife marks. – Flat scrapers for excellent alignment of edge and workpiece.
Workpiece material	Thick plastic edgebanding made from PVC, PP, ABS, thin plastic edgebanding made from melamine resin, veneer edgebanding, solid wood banding and edgebanding.
Machines	Single or double-sided edgebanding machines, double-end tenoners.
Application	Against feed for plastic edgebanding, preferably with feed for solid wood edge lippings.
Technical features	Tool and touch roller positions are coordinated, requiring constant tool dimensions. It is recommended not to resharpen edge processing tools.
Chip disposal	Tools with optimised chip collection are designed to the corresponding machines (i-System, ED-System), and guide the chips from the tool cutting edge into the extraction. Even at low extraction air speeds more than 97% of the chips are collected. This improves not only process efficiency and productivity, but also the working environment. New machines require less extraction.




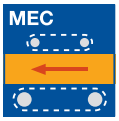



DP HW

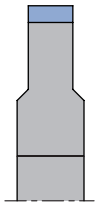
Type 1

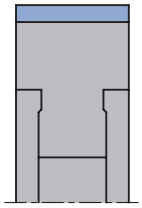
Type 2

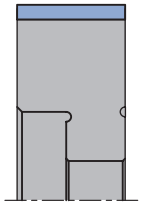
Type 3

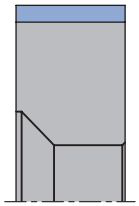
Type 4

Pre / finishing edge trimming cutter

Application:
To trim edgebandings on horizontal spindles or for bevelling with inclined spindles.

Machine:
Single or double-sided edgebanding machines.

Workpiece material:
Plastic, softwood, hardwood and veneer edgebander.

Technical information:
HW/DP tipped tools with cylindrical bore.

Jointing cutter
WF 200 2, WF 200 2 DP, WF 210 2, WF 210 2 DP

Machine	D mm	SB mm	ND mm	BO mm	Type	Z	QAL	ID LH	ID RH
Biesse	70	10	12	16 DKN	1	6	DP	**090899**	**090899**
Biesse	70	20	12	16 DKN	2	6	DP	**090893**	**090893**
Biesse	80	22	12	16 DKN	3	6	DP	**192103** ●	**192102** ●
Brandt	70	10	12	16 DKN	1	6	DP	**090899**	**090899**
Brandt	70	20	12	16 DKN	2	6	DP	**090893**	**090893**
Brandt	70	25	25	16 DKN	3	4	HW	**065588** ●	**065589** ●
Fravol	80	30	27,5	20 DKN	3	4	DP	**192270**	**192271**
Homag	70	10	12	16 DKN	1	6	DP	**090899**	**090899**
Homag	70	20	12	16 DKN	2	6	DP	**090893**	**090893**
Homag	70	25	25	16 DKN	3	4	HW	**065588** ●	**065589** ●
Ott	70	16,5	10	16 DKN	3	4	DP	**192283** ●	**192284** ●
SCM	80	30	11	16 DKN	2	4	HW	**065595** ●	**065596** ●
Stefani	80	20	11	16 DKN	2	4	DP	**192110**	**192111**

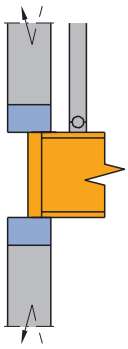
Trimming of edges on horizontal spindle - top motor tracing.

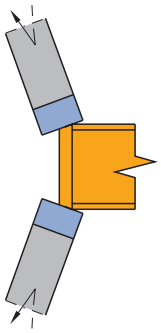
Bevelling of edges with inclined spindle.

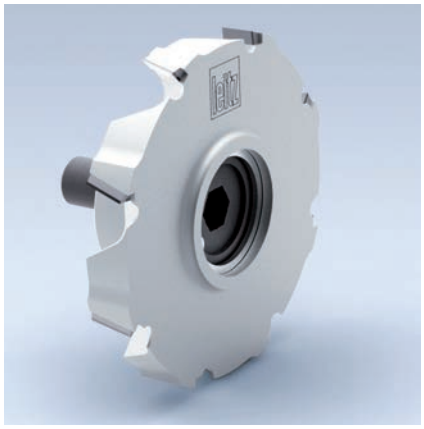



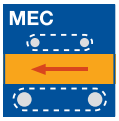



DP

HW



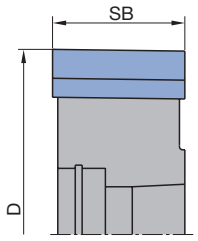

HW jointing cutter with HSK 25 R adaptor, SB-25 mm

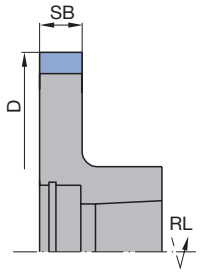

DP jointing cutter with HSK 25 R adaptor

Pre / finishing edge trimming cutter with optimised chip collection

Application:
To trim edgebandings on horizontal spindles or for bevelling with inclined spindles.

Machine:
Single or double-sided edgebanding machines.

Workpiece material:
Plastic, softwood, hardwood and veneer edgebander.

Technical information:
HW/DP tipped tools designed for systems for controlled chip collection (i-System, ED-System) for highly efficient chip collection (approx. 97%) with reduced energy consumption for extraction. Clean workpieces, no interference with scanning aggregates and less rework. High concentricity.

Jointing cutter - optimised chip collection
WF 200 2 DP, WF 210 2, WF 210 2 DP

Machine	D	SB	BO	Z	QAL	ID	ID
	mm	mm	mm			LH	RH
Homag, IMA	70	8	HSK 25 R	4	DP	**198472** ●	**198473** ●
Homag, IMA	70	8	HSK 25 R	6	DP	**198474** ●	**198475** ●
Homag, IMA	70	8	HSK 25 R	8	DP	**198404** ●	**198405** ●
Homag, IMA	70	15	HSK 25 R	4	DP	**198406** ●	**198407** ●
Homag, IMA	70	15	HSK 25 R	6	DP	**198468** □	**198469** □
Homag, IMA	70	25	HSK 25 R	4	HW	**073092** ●	**073093** ●
SCM	80	8	HSK 25 R	4	DP	**192335** ●	**192336** ●
SCM	80	30	HSK 25 R	4	HW	**182001** ●	**182002** ●

Recommended number of teeth:
Feed rates of up to 35 m min^{-1} Z 4
Feed rates of up to 60 m min^{-1} Z 6
Feed rates of up to 100 m min^{-1} Z 8 (thin edge)

● available ex stock
□ available at short notice
Instruction manual visit www.leitz.org

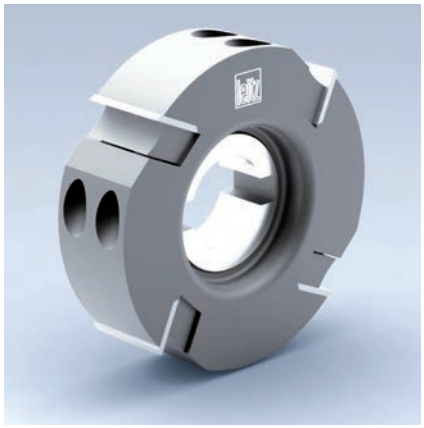



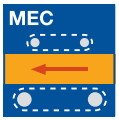



HW

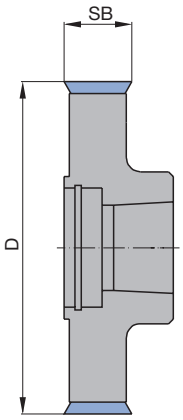

Type 1: WW 200 2 25

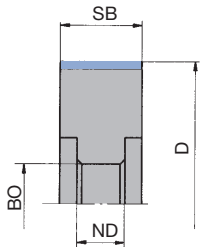

Type 2: WW 200 2 06

Pre / finishing edge trimming cutter cutterhead design

Application:
To trim edgebandings on horizontal spindles or for bevelling with inclined spindles.

Machine:
Single or double-sided edgebanding machines.

Workpiece material:
Plastic, softwood, hardwood and veneer edgebander.

Technical information:
Cutterhead with turnblade knives, cylindrical bore or HSK 25 R adaptor.

Jointing cutterhead
WW 200 2 06, WW 200 2 25

Machine	Type	D mm	SB mm	BO mm	Z	ID LH	ID RH
Brandt, Homag	1	70	14,3	16 DKN	4	**025130**	**025130**
Homag	1	70	14,3	HSK 25 R	4	**073599**	**073600**
Homag	2	70	20	16 DKN	4	**025079** ●	**025079** ●

Spare knives:

Part-no.	BEZ	ABM mm	QAL	VE PCS	ID
1	Turnblade knife	20x12x1,5	HW-05F	10	**005083** ●
1	Turnblade knife	40x12x1,5	HW-05F	10	**005085** ●
5	Turnblade knife	14,3x14,3x2,5	HW	10	**005426** ●

Spare parts:

Part-no.	BEZ	ABM mm	ID
2	Clamping wedge with pin	18x11,5x7	**005272** ●
3	Allen screw	M6x12	**006035**
6	Countersink screw, Torx® 20	M5x12	**006247** ●
7	Torx® key	Torx® 20	**006091** ●

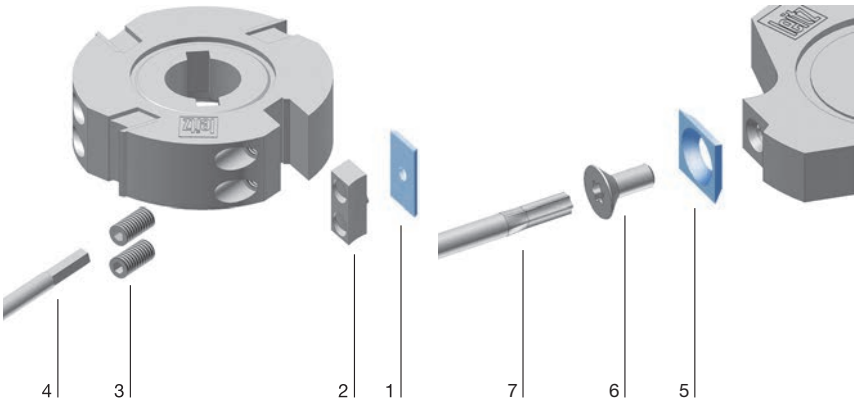

● available ex stock
□ available at short notice
Instruction manual visit www.leitz.org

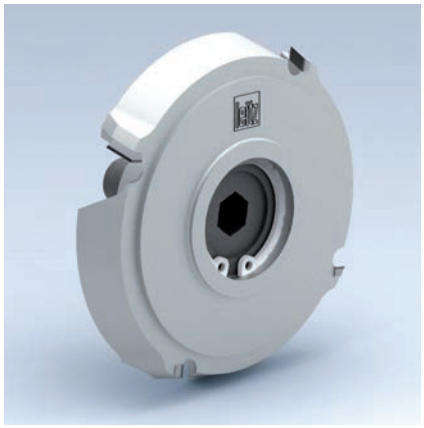

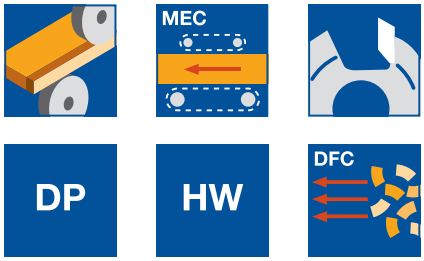

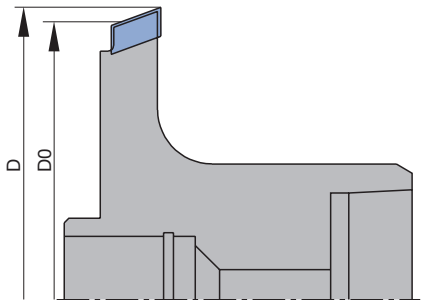

Bevel cutter with HSK 32 adaptor for FK aggregates

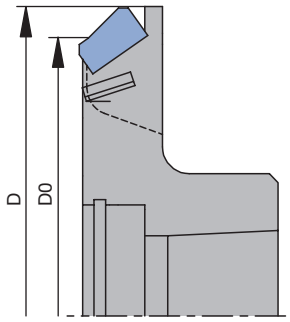

Bevel cutter with HSK 25 R adaptor

Bevel cutter with optimised chip collection

Application:
To bevel edgebandings.

Machine:
Single or double-sided edgebanding machines.

Workpiece material:
Plastic, softwood, hardwood and veneer edgebander.

Technical information:
HW/DP tipped tools designed for systems for controlled chip collection (i-System, ED-System) for highly efficient chip collection (approx. 97%) with reduced energy consumption for extraction. Clean workpieces, no interference with scanning aggregates and less rework. High concentricity. Constant reference diameter.
It is not recommended to resharpen the tool.

Various bevel angles - optimised chip collection
WF 300 2 DP, WF 350 2 DP, WF 501 2

Machine	D mm	D_0 mm	SB mm	BO mm	Z	QAL	FAW °	NH mm	ID LH	ID RH
Homag	65,14	62,3	5,7	HSK 32	4	DP	20	31,5	**198200** ●	**198201** ●
Homag	70	62,3	5,7	HSK 32	4	DP	45	31,5	**198240**	**198241**
Homag	65,14	62,3	5,7	HSK 32	6	DP	20	31,5	**198202** ●	**198203** ●
Homag	68,3	62,3	5,7	HSK 32	6	DP	45	31,5	**198242**	**198243**
Homag	72,91	70	5,5	HSK 25 R	4	DP	20	19,5	**198408** ●	**198409** ●
Homag	78	70	5,5	HSK 25 R	4	DP	45	19,5	**198464**	**198465**
Homag	73	70	5,5	HSK 25 R	6	DP	20	19,5	**198410**	**198411**
Homag	78	70	5,5	HSK 25 R	6	DP	45	19,5	**198466**	**198467**
IMA	72,91	70	5,5	HSK 25 R	4	DP	20	19,5	**198408** ●	**198409** ●
IMA	78	70	5,5	HSK 25 R	4	DP	45	19,5	**198464**	**198465**
IMA	73	70	5,5	HSK 25 R	6	DP	20	19,5	**198410**	**198411**
IMA	78	70	5,5	HSK 25 R	6	DP	45	19,5	**198466**	**198467**
SCM	69,6	61,7	6,0	HSK 25 R	4	HW	20	21,35	**182552**	**182553**
SCM	69,6	62,5	5,5	HSK 25 R	4	DP	45	22	**192707** □	**192708** □
SCM	69,6	62,5	5,5	HSK 25 R	4	DP	30	22	**192705** □	**192706** □
SCM	69,6	62,5	5,5	HSK 25 R	4	DP	20	22	**192703** □	**192704** □

● available ex stock
□ available at short notice
Instruction manual visit www.leitz.org




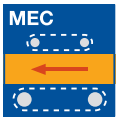



DP HW

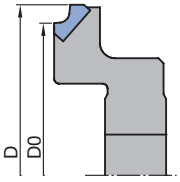

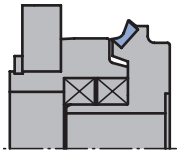

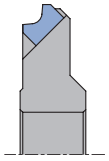
Type 3

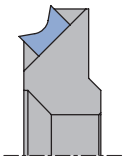
Type 4

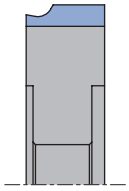
Type 5

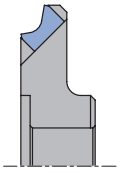
Type 6

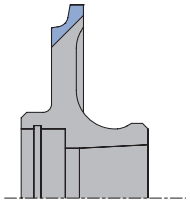
Type 7

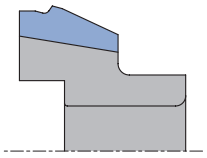
Type 8

Profile cutter

Application:
To round edgebandings.

Machine:
Single or double-sided edgebanding machines.

Workpiece material:
Plastic, softwood, hardwood and veneer edgebander.

Technical information:
HW/DP tipped tools with cylindrical bore, HSK 25 R adaptor or HSK 32 adaptor for FK-aggregates. High concentricity. D_0 = constant reference diameter.
It is not recommended to resharpen the tool.

Various radii
WF 210 2 DP, WF 501 2, WF 501 2 DP, WF 502 2, WF 502 2 DP, WF 599 2

	Machine	D mm	D_0 mm	BO mm	Z	QAL	R mm	FAW °	Type	ID LH	ID RH
	Biesse	67	60	16 DKN	6	DP	1,0		1	**091960** □	**091961** □
	Biesse	68	60	16 DKN	6	DP	2,0		1	**091962** □	**091963** □
	Biesse	70	60	16 DKN	6	DP	3,0		1	**091964** □	**091965** □
	Biesse	72	70	16 KN	6	DP	1,0		5	**192518** □	**192519** □
	Biesse	73	70	16 KN	6	DP	2,0		5	**192520** □	**192521** □
	Biesse	75	70	16 KN	6	DP	3,0		5	**192522** □	**192523** □
**	Brandt	58	50	16	4	DP	1,0		2		**192604** □
**	Brandt	58	50	16	4	DP	1,5		2		**192602** □
*	Brandt	58	50	16	4	DP	2,0		2		**091966**
**	Brandt	58	50	16	4	DP	2,0		2		**192603** □
	Brandt	70	62	HSK 25 R	4	DP	1,0		7	**192588** □	**192589** □
	Brandt	70	62	HSK 25 R	4	DP	1,3		7	**192590** □	**192591** □
	Brandt	70	62	HSK 25 R	4	DP	1,5		7	**192592** □	**192593** □
	Brandt	70	62	HSK 25 R	4	DP	2,0		7	**192594** □	**192595** □
	Brandt	70	62	HSK 25 R	4	DP	3,0		7	**192596** □	**192597** □
	EBM	32	24	14 DKN	2	DP	2,0		3	**074526**	
	Fravol	73	71,15	20 DKN	4	DP	1-3		8	**192645** ●	**192646** ●
	Fravol	76,8	74,71	20 DKN	4	DP	1-3		9	**192647**	**192648**
	Fravol	50	40,1	15 KN	4	DP	1-3		10	**192663**	**192664** ●
	Fravol	50	39,91	15 KN	4	DP	1-3		11		**192665**
	Fravol	50	39,91	15 KN	4	HW	1-3		11		**065597**
	Hebrock	32	24	14 DKN	2	DP	2,0		3	**074526**	
	Holz-Her 1825	57	50	16 DKN	2	DP	2,0		3	**192536** □	**192537** □
	Holz-Her 1825	57	50	16 DKN	2	DP	2,5		3	**192538** □	**192539** □
	Holz-Her 1825	57	50	16 DKN	2	DP	3,0		3	**192540** □	**192541** □
	Holz-Her 1827	56	50	20 DKN	2	DP	2,0		11	**192506** ●	**192507** ●
	Holz-Her 1827	56	50	20 DKN	2	DP	2,5		11	**192508** □	**192509** □
	Holz-Her 1827	57	50	20 DKN	2	DP	3,0		11	**192510** □	**192511** □
	Holz-Her 1832	58,7	50	16 DKN	3	DP	2,0		3	**192512** □	**192513** □
	Holz-Her 1832	58,7	50	16 DKN	3	DP	2,5		3	**192514** □	**192515** □
	Holz-Her 1832	58,7	50	16 DKN	3	DP	3,0		3	**192516** □	**192517** □
	Holz-Her 1833	72,5	61	20 DKN	4	DP	2,0		4	**192500** □	**192501** □
	Holz-Her 1833	72,5	61	20 DKN	4	DP	2,5		4	**192502** □	**192503** □
	Holz-Her 1833	72,5	61	20 DKN	4	DP	3,0		4	**192504** □	**192505** □

● available ex stock
□ available at short notice
Instruction manual visit www.leitz.org

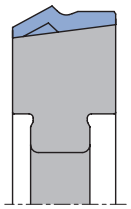

Type 9

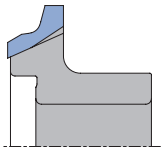

Type 10

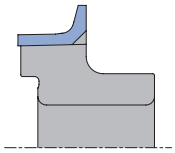

Type 11

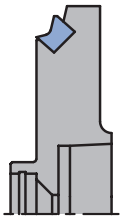

Type 12

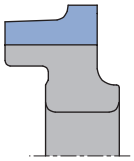

Type 13

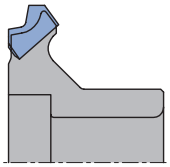

Type 14

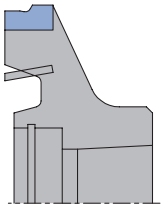

Type 15

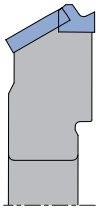

Type 16

	Machine	D mm	D_0 mm	BO mm	Z	QAL	R mm	FAW °	Type	ID LH	ID RH
	Holz-Her FR 701	72	68	16 DKN	2+2	DP		45	16	**192727** □	**192728** □
	Holz-Her FR 701	72	68	16 DKN	2+2	DP	1		16	**192719** □	**192720** □
	Holz-Her FR 701	72	68	16 DKN	2+2	DP	1,3		16	**192721** □	**192722** □
	Holz-Her FR 701	72	68	16 DKN	2+2	DP	2		16	**192723** □	**192724** □
	Holz-Her FR 701	72	68	16 DKN	2+2	DP	3		16	**192725** □	**192726** □
**	Homag	58	50	16	4	DP	1,0		2		**192604** □
**	Homag	58	50	16	4	DP	1,5		2		**192602** □
*	Homag	58	50	16	4	DP	2,0		2		**091966**
**	Homag	58	50	16	4	DP	2,0		2		**192603** □
	Homag	70	62	HSK 25 R	4	DP	1,0		7	**192588** □	**192589** □
	Homag	70	62	HSK 25 R	4	DP	1,3		7	**192590** □	**192591** □
	Homag	70	62	HSK 25 R	4	DP	1,5		7	**192592** □	**192593** □
	Homag	70	62	HSK 25 R	4	DP	2,0		7	**192594** □	**192595** □
	Homag	70	62	HSK 25 R	4	DP	3,0		7	**192596** □	**192597** □
	Homag	67,1	62	HSK 32	4	DP	1,0		12	**091500** □	**091501** □
	Homag	68,1	62	HSK 32	4	DP	1,5		12	**091502** □	**091503** □
	Homag	69,1	62	HSK 32	4	DP	2,0		12	**091504** □	**091505** □
	Ott	69	61	16 DKN	3	DP	2,0		1	**192649** ●	**192650** ●
	Ott	69	61	16 DKN	4	DP	2,0		1	**192651** ●	**192652** ●
	SCM	55,3	49,33	16 DKN	3	DP	2,0		13	**192701**	
	SCM	55,3	49.33	16 DKN	3	DP	2,0		13		**192702**
	SCM	55,3	49.33	16 DKN	3	HW	2,0		13	**182510** ●	**182511** ●
	SCM	55,7	48	16 DKN	3	HW	1,0		14	**182512** ●	**182513** ●
	SCM	55,7	48	16 DKN	3	HW	1,5		14	**182514** ●	**182515** ●
	SCM	55,7	48	16 DKN	3	HW	2,0		14	**182516** ●	**182517** ●
	SCM	55,7	48	16 DKN	3	HW	3,0		14	**182518** ●	**182519** ●
	SCM	65,82	63.88	HSK 25 R	4	HW	1,0		15	**182526**	**182527**
	SCM	66,44	63.88	HSK 25 R	4	HW	1,5		15	**182528**	**182529**
	SCM	67,09	63.88	HSK 25 R	4	HW	2,0		15	**182530**	**182531**
	SCM	67,55	63.88	HSK 25 R	4	HW	2,5		15	**182532**	**182533**
	SCM	68	63.88	HSK 25 R	4	HW	3,0		15	**182534**	**182535**
	Stefani	70	60	16 DKN	4	DP	1,0		6	**192524** □	**192525** □
	Stefani	70	60	16 DKN	4	DP	2,0		6	**192526** □	**192527** □
	Stefani	70	60	16 DKN	4	DP	3,0		6	**192528** □	**192529** □
	Stefani	51,5	49,71	16 DKN	4	HW	1,0		8	**192657**	**192658**
	Stefani	51,5	49,71	16 DKN	4	HW	1,5		8	**192659**	**192660**
	Stefani	51,5	49,71	16 DKN	4	HW	2,0		8	**192661**	**192662**
	Törk Makine	46	39	16	4	DP	2,0		3	**192643**	**192644**

* For Brandt edge trimming cutter with keyed and torque support.
** = For Brandt edge trimming cutter with keyed (without torque support).

● available ex stock
□ available at short notice
Instruction manual visit www.leitz.org



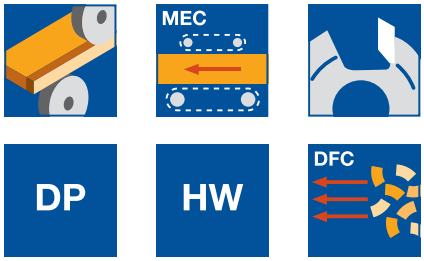

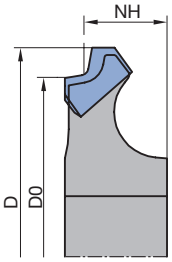

Radius cutter with cylindrical bore

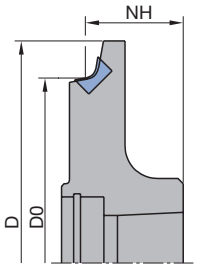

Radius cutter with HSK 25 R adaptor

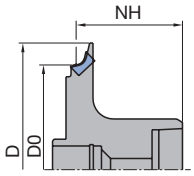

Radius cutter with HSK 32 adaptor for FK aggregates

Profile cutter with optimised chip collection

Application:
To round edgebandings.

Machine:
Single or double-sided edgebanding machines.

Workpiece material:
Plastic, softwood, hardwood and veneer edgebander.

Technical information:
HW/DP tipped tools designed for systems for controlled chip collection (i-System, ED-System) for highly efficient chip collection (approx. 97%) with reduced energy consumption for extraction. Clean workpieces, no interference with scanning aggregates and less rework. Maximum concentricity. Constant reference diameter. It is not recommended to resharpen the tool.

Various radii - optimised chip collection
WF 210 2 DP, WF 501 2, WF 501 2 DP

Machine	D mm	D_0 mm	NH mm	BO mm	Z	QAL	R mm	ID LH	ID RH
Homag	75	62	31,5	HSK 32	4	DP	1,0	**198212** ●	**198213** ●
Homag	75	62	31,5	HSK 32	4	DP	1,5	**198214** □	**198215** □
Homag	75	62	31,5	HSK 32	4	DP	2,0	**198216** ●	**198217** ●
Homag	75	62	31,5	HSK 32	4	DP	2,5	**198220** □	**198221** □
Homag	75	62	31,5	HSK 32	4	DP	3,0	**198222**	**198223**
Homag	75	62	31,5	HSK 32	6	DP	1,0	**198246** □	**198247** □
Homag	75	62	31,5	HSK 32	6	DP	1,5	**198244** ●	**198245** ●
Homag	75	62	31,5	HSK 32	6	DP	2,0	**198218** □	**198219** □
Homag	75	62	31,5	HSK 32	6	DP	3,0	**198224**	**198225**
Homag, IMA	76	70	17,5	HSK 25 R	4	DP	1,0	**198494** ●	**198484** ●
Homag, IMA	76	70	17,5	HSK 25 R	4	DP	1,5	**198495** ●	**198485** ●
Homag, IMA	76	70	18,5	HSK 25 R	4	DP	2,0	**198496** ●	**198486** ●
Homag, IMA	76	70	17,5	HSK 25 R	6	DP	1,0	**198499** ●	**198489** □
Homag, IMA	76	70	17,5	HSK 25 R	6	DP	1,5	**198500** ●	**198490** ●
Homag, IMA	76	70	18,5	HSK 25 R	6	DP	2,0	**198501** ●	**198491** ●
Homag, IMA	78	70	19	HSK 25 R	4	DP	2,5	**198497** □	**198487** □
Homag, IMA	78	70	19,5	HSK 25 R	4	DP	3,0	**198498** ●	**198488** ●
SCM	55,3	48	11,4	16 DKN	3	DP	1,0	**192699**	**192700**
SCM	55,3	48	11,4	16 DKN	3	HW	1,0	**182502** ●	**182503** ●
SCM	55,3	48	11,4	16 DKN	3	HW	1,5	**182504** ●	**182505** ●
SCM	55,3	48	11,4	16 DKN	3	DP	2,0	**192697** ●	**192698** ●
SCM	55,3	48	11,4	16 DKN	3	HW	2,0	**182506** ●	**182507** ●
SCM	55,3	48	11,4	16 DKN	3	HW	3,0	**182508** ●	**182509** ●
SCM	69,6	61,7	21,35	HSK 25 R	4	HW	1,0	**182546**	**182547**
SCM	69,6	61,7	21,35	HSK 25 R	4	HW	1,5	**182548**	**182549**
SCM	69,6	61,7	21,35	HSK 25 R	4	HW	2,0	**182550**	**182551**
SCM	69,6	61,7	21,35	HSK 25 R	4	HW	2,5	**182554**	**182555**
SCM	69,6	61,7	21,35	HSK 25 R	4	HW	3,0	**182556**	**182557**
SCM	69,9	62,3	22	HSK 25 R	4	DP	1,0	**192709** □	**192710** □
SCM	69,9	62,3	22	HSK 25 R	4	DP	1,5	**192711** □	**192712** □
SCM	69,9	62,3	22	HSK 25 R	4	DP	2,0	**192713** □	**192714** □
SCM	69,9	62,3	22	HSK 25 R	4	DP	2,5	**192715** □	**192716** □
SCM	69,9	62,3	22	HSK 25 R	4	DP	3,0	**192717** □	**192718** □

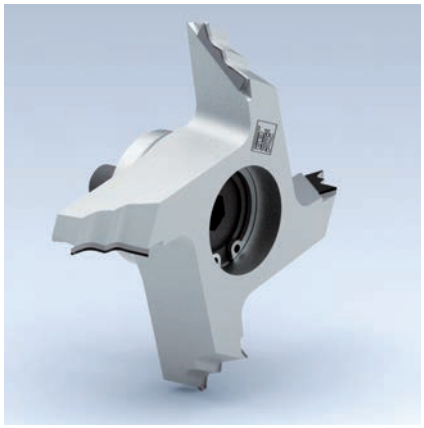


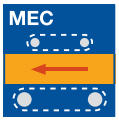



DP HW

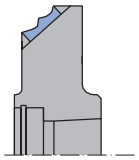
Type 1

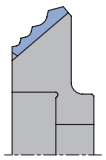
Type 2

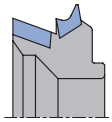
Type 3

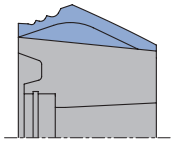
Type 4

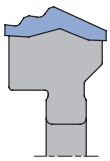
Type 5

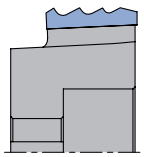
Type 6

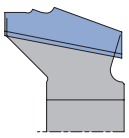
Type 7

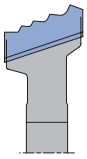
Type 8

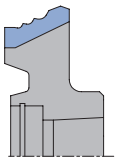
Type 9

Multi-profile cutter

Application:
For a choice of radii or bevels on edgebandings.

Machine:
Single or double-sided edgebanding machines.

Workpiece material:
Plastic, softwood, hardwood and veneer edgebander.

Technical information:
HW/DP tipped tools with cylindrical bore or HSK 25 R adaptor. Profiling with e.g. radii 2.0 and 3.0 mm and bevel 20°. D_0 = constant reference diameter.
It is not recommended to resharpen the tool.

Multi-profile cutter
WF 210 2, WF 210 2 DP, WF 501 2, WF 501 2 DP, WF 501 2 DP , WF 502 2, WF 502 2 DP, WF 502 2 DP

Machine	D mm	D_0 mm	BO mm	Z	QAL	R mm	FAW °	Type	ID LH	ID RH
Biesse	75,4	60	16 DKN	6	DP	1/2/3	25	2	**091996** □	**091995** □
Holz-Her	58	50	20 DKN	2	DP	2		3	**192530** □	**192531** □
Holz-Her	58	50	20 DKN	2	DP	2,5		3	**192532** □	**192533** □
Holz-Her	58	50	20 DKN	2	DP	3		3	**192534** □	**192535** □
Holz-Her 1826	58	50	20 DKN	2	DP	2		3	**192530** □	**192531** □
Holz-Her 1826	58	50	20 DKN	2	DP	2,5		3	**192532** □	**192533** □
Holz-Her 1826	58	50	20 DKN	2	DP	3		3	**192534** □	**192535** □
Holz-Her FR 701	71	68	16 DKN	4	DP	3/2/1,3	45	6	**192673** □	**192674** □
Holz-Her FR 701	71	68	16 DKN	4	DP	1,3/1/0,8	45	6	**192681** □	**192682** □
Holz-Her FR 701	71	68	16 DKN	4	DP	3/2/1,3	10	6	**192679** □	**192680** □
Holz-Her FR 701	71	68	16 DKN	4	DP	2/1,3/1,3	45	6	**192677** □	**192678** □
Holz-Her FR 701	71	68	16 DKN	4	DP	2/2/1,3	45	6	**192675** □	**192676** □
Holz-Her FR 701	71	68	16 DKN	4	DP	3/2/2	45	6	**192743** □	**192744** □
Holz-Her FR 701	71	68	16 DKN	4	DP	2/1,3	45	6	**192745** □	**192746** □
Holz-Her FR 701	71,5	68	16 DKN	4	DP	2/1,3/2/1,3		6	**192691** □	**192692** □
Holz-Her FR 701	71,5	68	16 DKN	4	DP	2/1,3	31	6	**192693** □	**192694** □
Homag	74,33	65,7	HSK 25 R	4	DP	1/2		4	**198506** ●	**198507** ●
Homag	74,67	65,7	HSK 25 R	4	DP	1,3/2		4	**198508** □	**198509** □
Homag	74,33	62,99	16 DKN	4	DP	1/2		5	**192683** ●	**192684** ●
Homag	74,66	65,69	16 DKN	4	DP	1,3/2		5	**192685** □	**192686** □
SCM	74,5	63,9	HSK 25 R	4	HW	1/1,5/2		9	**182538**	**182539**
SCM	74,5	63,9	HSK 25 R	4	HW	1/1,5/3		9	**182540**	**182541**
SCM	74,5	63,9	HSK 25 R	4	HW	1/2/3		9	**182542**	**182543**
SCM	75,7	63,9	HSK 25 R	4	HW	1,5/2/3		9	**182544**	**182545**
SCM	75,7	63,9	HSK 25 R	4	HW	1/1,5/2,5		9	**182558**	**182559**
SCM	75,7	63,9	HSK 25 R	4	HW	2/2,5/3		9	**182560**	**182561**
SCM	62,03	49,44	16 DKN	4	HW	1/1,5		7	**182522** ●	**182523** ●
SCM	62,47	50,12	16 DKN	4	HW	1/2		7	**182520**	**182521** ●
SCM	73	60	16 DKN	4	HW	2/3		8	**182501**	**182500**
SCM	73	60	16 DKN	4	DP	2/3		8	**192696**	**192695**
SCM	77,4	63,1	16 DKN	4	HW	1/1,5/2		8	**182524**	**182525**
Stefani	74,5	63,88	HSK 25 R	4	DP	1/1,5/2	20	1	**192653** □	**192654** □
Stefani	74,5	63,88	HSK 25 R	4	DP	1/1,5/2	20	4	**192655** □	**192656** □

Alternative multi-profile trimming heads with different dimensions can be supplied at short notice on request.

● available ex stock
□ available at short notice
Instruction manual visit www.leitz.org

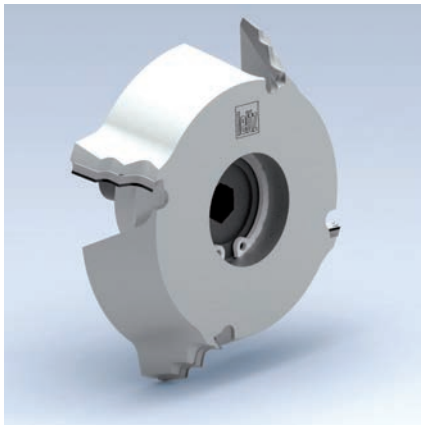



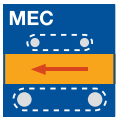



DP



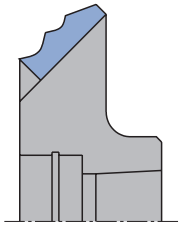

Type 1

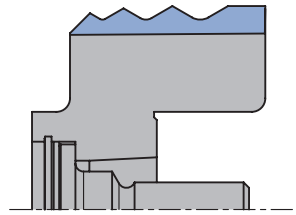

Type 2

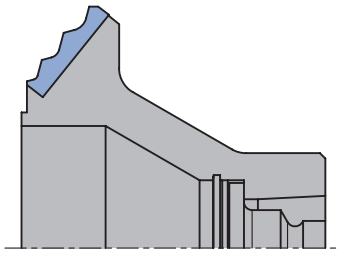

Type 3

Multi-profile cutter with optimised chip collection

Application:
For a choice of radii or bevels on edgebandings.

Machine:
Single or double-sided edgebanding machines.

Workpiece material:
Plastic, softwood, hardwood and veneer edgebander.

Technical information:
DP tipped tools designed for systems for controlled chip collection (i-System, ED-System) for highly efficient chip collection (approx. 97%) with reduced energy consumption for extraction. Clean workpieces, no interference with scanning aggregates and less rework. High concentricity. It is not recommended to resharpen the tool.

Multi-profile cutter - optimised chip collection
WF 501 2 DP, WF 502 2 DP

Machine	D mm	D_0 mm	B mm	BO mm	Z	QAL	R mm	FAW °	Type	ID LH	ID RH
Homag, IMA	85	62		HSK 25 R	4	DP	2/3	20	1	**198444** □	**198445** □
Homag, IMA	85	62		HSK 25 R	4	DP	1,5/2	20	1	**198504** ●	**198505** ●
Homag, IMA	85	62		HSK 25 R	6	DP	2/3	20	1	**198456** □	**198457** □
IMA Multi-profiler	75		30	HSK 25 R	6	DP	1/2/3	15	2	**091916** ●	**091917** ●
IMA Multi-profiler	75		30	HSK 25 R	6	DP	1/1,5/2	20	2	**091922** ●	**091923** ●
IMA Multi-profiler KFA	75		28	HSK 25 R	6	DP	1/2/3	15	2	**091912** □	**091913** □
IMA Multi-profiler KFA	75		28	HSK 25 R	6	DP	1/1,5/2	20	2	**091924** ●	**091925** □
IMA Multi-profiler KFA	75		28	HSK 25 R	6	DP	1/2/3	45	2	**091926** ●	**091927** □
IMA MFA	89	62		HSK 25 R	6	DP	1/2	15	3	**091918** □	**091919** □
IMA MFA	89	57		HSK 25 R	6	DP	1/2/3	15	3	**091920** □	**091921** □

Alternative multi-profile trimming heads with different dimensions can be supplied at short notice on request.




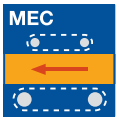






Multi-profile cutter with optimised chip collection

Application:
For multi-profile cutting with radii and bevelling of edges. Combination of three profiles for automatic profile resetting.

Machine:
Homag edgebanding machines with profile FK31 trimming aggregate.

Workpiece material:
Plastic, softwood, hardwood and veneer edgebander.

Technical information:
Three profiles in one tool. DFC design for highly efficient chip clearance of more than 97%. D_0 = constant reference diameter. Low noise DP tool. Maximum concentricity. Tool change while the spindle is running. It is recommended to have individual tools changed by the Leitz tool service. It is not possible to resharpen the tool.

Diamaster PRO, FK31 aggregate
WF 501 2 DP

Machine	Tool no.	D mm	D_0 mm	BO mm	Z	QAL	R mm	FAW °	ID LH	ID RH
Homag	1	88	80,1	46	4	DP	1,5		**192558** □	**192559** □
Homag	1	88	80,1	46	4	DP	2,0		**192556** ●	**192557** ●
Homag	1	88	80,1	46	4	DP	2,5		**192554** □	**192555** □
Homag	1	88	80,1	46	4	DP	3,0		**192552** □	**192553** □
Homag	2	87	80,1	55	4	DP	1,0		**192568** ●	**192569** □
Homag	2	87	80,1	55	4	DP	1,5		**192566** □	**192567** □
Homag	2	87	80,1	55	4	DP	2,0		**192564** □	**192565** □
Homag	3	92	80,1	73	4	DP	1,0		**192574** □	**192575** ●
Homag	3	92	80,1	73	4	DP	1,5		**192572** □	**192573** □
Homag	3	92	80,1	73	4	DP	2,0		**192570** □	**192571** □
Homag	3	92	80,1	73	4	DP		20		**192119**
Homag	3	92	80,1	73	4	DP		45	**192116** ●	**192117** ●

Differing radii available at short notice from a tool bank. Tool 1 radius must be greater than tool 2 and 3. The larger radius defines the maximal bevel size of the moveable bevel tools 2 and 3.

Spare parts:

Part-no.	BEZ	ABM mm	ID
4	Cylindrical screw with ISK	M5x12	**114046** ●
5	Cylindrical screw with ISK	M5x30	**114045** ●

Tools supplied with mounting screws.

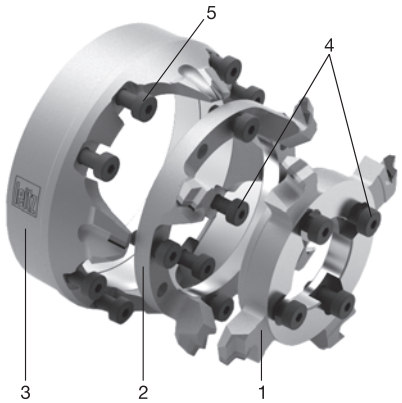

● available ex stock
□ available at short notice
Instruction manual visit www.leitz.org





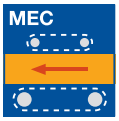







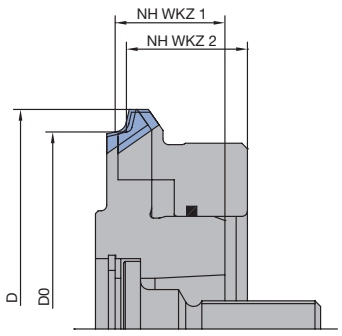

Profile cutter flexTrim

Application:
For multi-profile cutting with radii and bevelling of edges. Combination of two profiles for automatic profile resetting in the workpiece gap.

Machine:
Homag edgebanding machines with cutting unit type FK11, FK20, FK21, FF12, FF32, PF21 with flexTrim cutting head.

Workpiece material:
Plastic, softwood, hardwood and veneer edgebander.

Technical information:
Two profiles in one tool. DFC design for efficient chip collection. Maximum processing quality through high running accuracy and smooth running. D_0 = constant reference diameter, RPM n_{max} = 18000 min^{-1}. It is recommended to have individual tools changed by the Leitz tool service. It is not possible to resharpen the tool.

Multi-profile cutterset flexTrim - Diamaster PRO
SF 542 2 15

Machine	D mm	D_0 mm	NH mm	BO mm	Z	QAL	R mm	FAW °	ID LH	ID RH
Homag	78	70	19,5	HSK 25 R	4	DP	1,5/1,0		**194300** □	**194301** □
Homag	78	70	19,5	HSK 25 R	4	DP	2,0/1,0		**194302** ●	**194303** ●
Homag	78	70	19,5	HSK 25 R	4	DP	2,0/1,5		**194304** □	**194305** □
Homag	78	70	19,5	HSK 25 R	4	DP	3,0/2,0		**194306** □	**194307** □
Homag	78	70	19,5	HSK 25 R	4	DP	2,0	20	**194308** □	**194309** □
Homag	78	70	19,5	HSK 25 R	4	DP	2,0	45	**194310** ●	**194311** ●

Tool 1 fix + tool 2 flexible

All tools and further profile variants available in various dimensions from blank at short notice. Further combinations possible on request.

Spare parts:

Part-no.	Tool no.	BEZ	ABM mm	ID
3	2	O-Ring	40x1.78 NBR70	**118300** ●

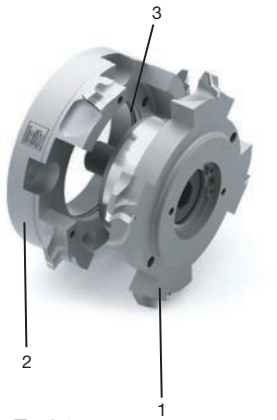

1 = Tool 1
2 = Tool 2
3 = O-Ring

● available ex stock
□ available at short notice
Instruction manual visit www.leitz.org





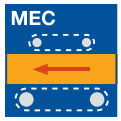



DP

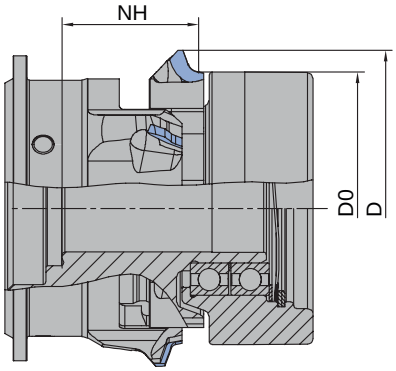

Profile cutter flexTrim

Application:
For multi-profile cutting with radii and bevelling of edges. Combination of two profiles for automatic profile resetting.

Machine:
Homag edgebanding machines with cutting unit type FF6210.

Workpiece material:
Plastic, softwood, hardwood and veneer edgebander.

Technical information:
Two profiles in one tool. Alternatively with only one profile. Maximum processing quality through high running accuracy and smooth running. D_0 = constant reference diameter, RPM n_{max} = 12000 min^{-1}. It is not possible to resharpen the tool.

Multi-profile cutterset flexTrim - Diamaster PRO, aggregate FF6210
SF 542 2 18, WF 501 2 18

Machine	D mm	D_0 mm	NH mm	BO mm	Z	QAL	R mm	FAW °	ID RH
Homag	58	50	25	16	3	DP	3,0/1,0		**194700** □
Homag	58	50	25	16	3	DP	3,0/1,3		**194701** □
Homag	58	50	25	16	3	DP	3,0/2,0		**194702** □
Homag	58	50	25	16	3	DP	2,0/1,0		**194703** ●
Homag	58	50	25	16	3	DP	2,0/1,3		**194704** ●
Homag	58	50	25	16	3	DP	2,0/1,5		**194705** □
Homag	58	50	25	16	3	DP	2,0	45	**194706** □
Homag	58	50	25	16	3	DP	1,5/1,5		**194707** □
Homag	58	50	25	16	3	DP	3,0		**194724** ●
Homag	58	50	25	16	3	DP	2,0		**194725** ●
Homag	58	50	25	16	3	DP	1,5		**194726** □
Homag	58	50	25	16	3	DP	1,3		**194727** □
Homag	58	50	25	16	3	DP	1,0		**194728** ●
Homag	58	50	25	16	3	DP		45	**194729** □
Homag	58	50	25	16	3	DP		30	**194730** □
Homag	58	50	25	16	3	DP		15	**194731** □

Further profile variants and combinations possible on request.

● available ex stock
□ available at short notice
Instruction manual visit www.leitz.org





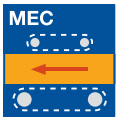



DP

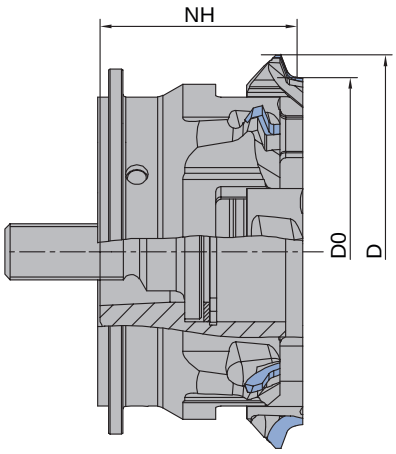

Profile cutter flexTrim

Application:
For multi-profile cutting with radii and bevelling of edges. Combination of two profiles for automatic profile resetting.

Machine:
Homag edgebanding machines with cutting unit type MF50, MF60.

Workpiece material:
Plastic, softwood, hardwood and veneer edgebander.

Technical information:
Two profiles in one tool. Alternatively with only one profile. Maximum processing quality through high running accuracy and smooth running. D_0 = constant reference diameter, RPM n_{max} = 12000 min^{-1}. It is not possible to resharpen the tool.

Multi-profile cutterset flexTrim - Diamaster PRO, aggregate MF50, MF60
SF 542 2 18, WF 501 2 18

Machine	D mm	D_0 mm	NH mm	BO mm	Z	QAL	R mm	FAW °	ID LH	ID RH
Homag	70	62	35	HSK 25 R	4	DP	3,0/1,0		**194708** ●	**194709** ●
Homag	70	62	35	HSK 25 R	4	DP	3,0/1,3		**194710** ●	**194711** ●
Homag	70	62	35	HSK 25 R	4	DP	3,0/2,0		**194712** □	**194713** □
Homag	70	62	35	HSK 25 R	4	DP	2,0/1,0		**194714** ●	**194715** ●
Homag	70	62	35	HSK 25 R	4	DP	2,0/1,3		**194716** ●	**194717** ●
Homag	70	62	35	HSK 25 R	4	DP	2,0/1,5		**194718** □	**194719** □
Homag	70	62	35	HSK 25 R	4	DP	2,0	45	**194720** □	**194721** □
Homag	70	62	35	HSK 25 R	4	DP	1,5/1,5		**194722** □	**194723** □
Homag	70	62	35	HSK 25 R	4	DP	1,3/1,0		**194732** □	**194733** □
Homag	70	62	35	HSK 25 R	4	DP	3,0		**194740** □	**194741** □
Homag	70	62	35	HSK 25 R	4	DP	2,0		**194742** ●	**194743** ●
Homag	70	62	35	HSK 25 R	4	DP	1,5		**194744** □	**194745** □
Homag	70	62	35	HSK 25 R	4	DP	1,3		**194746** □	**194747** □
Homag	70	62	35	HSK 25 R	4	DP	1,0		**194748** □	**194749** □
Homag	70	62	35	HSK 25 R	4	DP		45	**194750** □	**194751** □
Homag	70	62	35	HSK 25 R	4	DP		30	**194752** □	**194753** □
Homag	70	62	35	HSK 25 R	4	DP		15	**194754** □	**194755** □

Further profile variants and combinations possible on request.





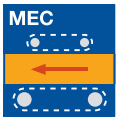



DP

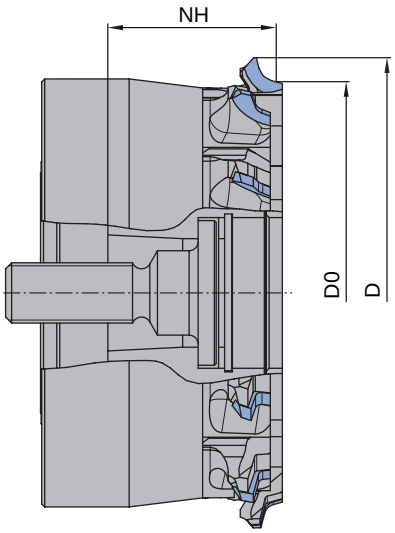

Profile cutter flexTrim3

Application:
For multi-profile cutting with radii on edges. Combination of three profiles for automatic profile resetting.

Machine:
Homag edgebanding machines with cutting unit type FF32 with flexTrim cutting head.

Workpiece material:
Plastic, softwood, hardwood and veneer edgebander.

Technical information:
Three profiles in one tool. Maximum processing quality through high running accuracy and quiet running. D_0 = constant reference diameter, RPM n_{max} = 12.000 min^{-1}. Replacement of tool components only by qualified personnel of the tool or machine manufacturer. It is not possible to resharpen the tool.

Multi-profile cutterset flexTrim3 - Diamaster PRO
SF 541 2 17

Machine	D mm	D_0 mm	NH mm	BO mm	Z	QAL	R mm	FAW °	ID LH	ID RH
Homag	78	70	28	HSK 25 R	4	DP	2/1,5/1		**194500** □	**194501** □
Homag	78	70	28	HSK 25 R	4	DP	2/1,3/1		**194502** □	**194503** □
Homag	78	70	28	HSK 25 R	4	DP	2/1	45	**194514** □	**194515** □
Homag	78	70	28	HSK 25 R	4	DP	2/1,3	45	**194518** □	**194519** □

Further profile variants and combinations possible on request. Single tools available on request.

● available ex stock
□ available at short notice
Instruction manual visit www.leitz.org




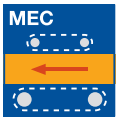






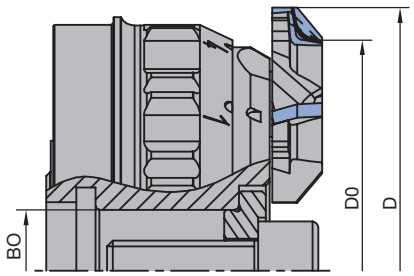

Profile cutter Quattro^{Form}

Application:
For multi-profile cutting with radii and bevelling of edges. Combination of four profiles for automatic profile resetting.

Machine:
Holz-Her model Lumina and Accura 2015 and newer models. Application on revolver cutting unit Quattro Form (FF 701 Multi).

Workpiece material:
Plastic, softwood, hardwood and veneer edgebander.

Technical information:
DP composite tool with four profiles and mounting screw. Profiles automatically adjustable by the machine control. Patented system. D_0 = constant reference diameter, RPM n = 18000 min^{-1}. It is recommended to have individual tools changed by the Leitz tool service. It is not possible to resharpen the tool.

Multi-profile cutter Quattro^{Form} - Diamaster PRO
SF 540 2 10

Machine	D mm	D_0 mm	BO mm	Z	R mm	FAW °	ID LH	ID RH
Holz-Her FF 701 Multi	70	61	16	3	2/1,3/2	45	**193901** ●	**193900** ●
Holz-Her FF 701 Multi	70	61	16	3	3/1,3/2	45	**193903** □	**193902** □
Holz-Her FF 701 Multi	70	61	16	3	3/1,3/2	10	**193905** □	**193904** □
Holz-Her FF 701 Multi	70	61	16	3	2/1,3/1,3	45	**193907** ●	**193906** ●
Holz-Her FF 701 Multi	70	61	16	3	2/1,5/1	45	**193909** □	**193908** □
Holz-Her FF 701 Multi	70	61	16	3	2/1,3/2/1,3		**193917** ●	**193916** ●
Holz-Her FF 701 Multi	70	61	16	3	2/1,3/1,3/1,3		**193921** □	**193920** □

All tools and further profile variants are available in various dimensions from blanks at short notice. Profile radius maximum 3 mm.

Spare parts:

BEZ	ID
Maintenance set Quattro Form	**008383** ●

RL

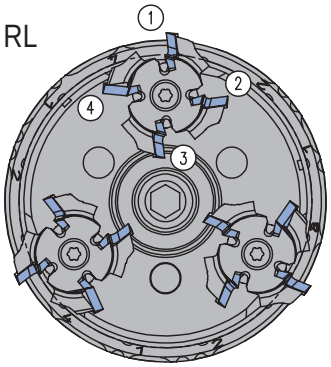

①	②	③	④	Leitz-Id.	Holzher
R2	R1.3	R2	F45°	193900	5073458
R3	R1.3	R2	F45°	193902	5073461
R3	R1.3	R2	F10°	193904	5073463
R2	R1.3	R1.3	F45°	193906	5073466
R2	R1.5	R1	F45°	193908	5073468
R2	R1.3	R2	R1.3	193916	5073449
R2	R1.3	R1.3	R1.3	193920	5073456

LL

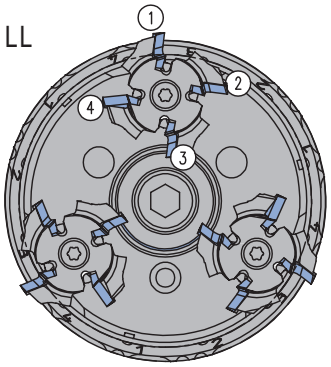

①	②	③	④	Leitz-Id.	Holzher
R2	R1.3	R2	F45°	193901	5073457
R3	R1.3	R2	F45°	193903	5073459
R3	R1.3	R2	F10°	193905	5073462
R2	R1.3	R1.3	F45°	193907	5073465
R2	R1.5	R1	F45°	193909	5073467
R2	R1.3	R2	R1.3	193917	5073447
R2	R1.3	R1.3	R1.3	193921	5073454

● available ex stock
□ available at short notice
Instruction manual visit www.leitz.org





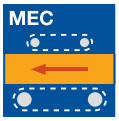







Profile cutter Multi-Edge

Application:
For multi-profile cutting with radii of edges. Combination of three profiles for automatic profile resetting.

Machine:
Stefani.

Workpiece material:
Plastic, softwood, hardwood and veneer edgebander.

Technical information:
Three profiles in one tool. DFC design for efficient chip collection.
Maximum processing quality through high running accuracy and smooth running.
D_0 = constant reference diameter, RPM n_{max} = 18000 min^{-1}. Tool change while the spindle is running. It is recommended to have individual tools changed by the Leitz tool service. It is not possible to resharpen the tool.

Diamaster PRO
WF 501 2 16

Machine	Tool no.	D mm	D_0 mm	BO mm	Z	QAL	R mm	FAW °	ID LH	ID RH
Stefani	1	68	61,7	10 DKN	4	DP	1,0		**192606** □	**192605** □
Stefani	1	68	61,7	10 DKN	4	DP	1,5		**192610** ●	**192609** ●
Stefani	1	68	61,7	10 DKN	4	DP	2,0		**192612** ●	**192611** ●
Stefani	1	68	61,7	10 DKN	4	DP	2,5		**192614** □	**192613** □
Stefani	1	68	61,7	10 DKN	4	DP	3,0		**192616** ●	**192615** ●
Stefani	2	68	61,7	23	4	DP	1,0		**192618** ●	**192617** ●
Stefani	2	68	61,7	23	4	DP	1,5		**192622** ●	**192621** ●
Stefani	2	68	61,7	23	4	DP	2,0		**192624** □	**192623** □
Stefani	3	68	61,5	38	4	DP	1,0		**192672** □	**192671** □
Stefani	3	68	61,7	38	4	DP	1,0		**192629** □	**192630** □
Stefani	3	68	61,7	38	4	DP	2,0		**192636** □	**192635** □
Stefani	3	68	61,7	38	4	DP		45	**192730** □	**192729** □

Further profile variants in various dimensions available on request at short notice.

● available ex stock
□ available at short notice
Instruction manual visit www.leitz.org

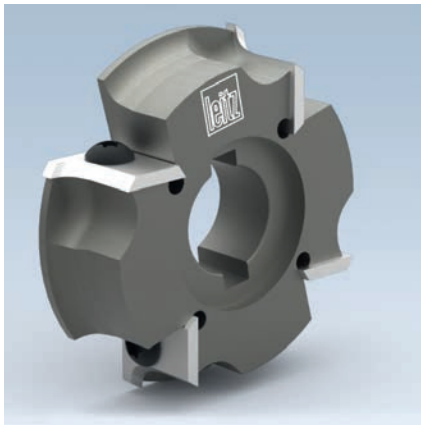



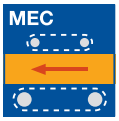



HW

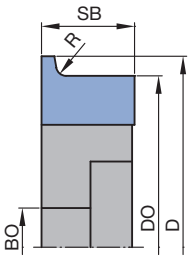

Profile cutterhead / bevel cutterhead

Application:
To round edgebandings.

Machine:
Single or double-sided edgebanding machines.

Workpiece material:
Plastic, softwood, hardwood and veneer edgebander.

Technical information:
Cutterheads with HW knives and cylindrical bore with DKN. One cutterhead basic body for R 1.5 to 3.0 mm. D_0 = constant reference diameter.

Various radii - Hebrock/EBM
WE 500 2

Machine	D mm	D_0 mm	SB mm	BO mm	Z	R mm	ID LH	ID RH
Hebrock, EBM	56	49,7	14,5	16 DKN	4	2,0	**074559**	**074560**
Hebrock, EBM	56	49,7	14,5	16 DKN	4	2,5	**074557**	**074558**

Spare knives:

Part-no.	Type	BEZ	ABM mm	QAL	R mm	VE PCS	ID LH	ID RH
1	1	Combi exchange knife	14.5x14.5x2	HW	2,0	2	**074632** ●	**074633** ●
1	1	Combi exchange knife	14.5x14.5x2	HW	2,5	2	**074630** ●	**074631** ●

Spare parts:

Part-no.	BEZ	ABM mm	ID
2	Screw	M3.5x8	**005723** ●

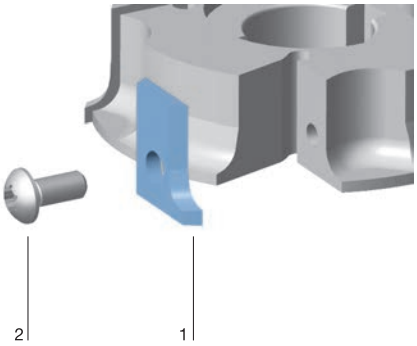





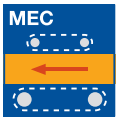







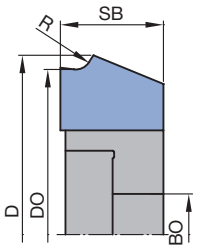

Profile cutterhead / bevel cutterhead

Application:
To round and bevel edgebandings.

Machine:
Single or double-sided edgebanding machines. Machines must be equipped with DFC system.

Workpiece material:
Plastic, softwood, hardwood and veneer edgebander.

Technical information:
Cutterheads with HW knives and cylindrical bore with DKN. D_0 = constant reference diameter. DFC design for highly efficient chip clearance of more than 97%.

Various profiles - DFC, Brandt, Homag
WE 500 2

Machine	D mm	SB mm	BO mm	Z	R mm	FAW °	ID LH	ID RH
Brandt, Homag	69,98	20,28	16 DKN	4		45	**075016** □	**075017** □
Brandt, Homag	70,57	20,28	16 DKN	4	1,0		**075018** ●	**075019** ●
Brandt, Homag	70,57	20,28	16 DKN	4	1,3		**075072** ●	**075073** ●
Brandt, Homag	70,57	20,28	16 DKN	4	1,5		**075022** □	**075023** □
Brandt, Homag	70,57	20,28	16 DKN	4	2,0		**075024** ●	**075025** ●
Brandt, Homag	70,57	20,28	16 DKN	4	3,0		**075028** ●	**075029** ●

Spare knives:

Part-no.	Type	BEZ	ABM mm	QAL	R mm	FAW °	VE PCS	ID LH	ID RH
1	1	Exchange knife	22,3x14x2	HW	1,0		2	**075315** ●	**075314** ●
1	1	Exchange knife	22,3x14x2	HW	1,2		2	**075317** □	**075316** □
1	1	Exchange knife	22.3x14x2	HW	1,3		2	**075272** ●	**075271** ●
1	1	Exchange knife	22,3x14x2	HW	1,5		2	**075319** ●	**075318** ●
1	1	Exchange knife	22,3x14x2	HW	2,0		2	**075307** ●	**075306** ●
1	1	Exchange knife	22,3x14x2	HW	3,0		2	**075309** ●	**075308** ●
1	1	Exchange knife	22,3x14x2	HW		15	2	**075311** ●	**075310** ●
1	1	Exchange knife	22,3x14x2	HW		30	2	**075331** □	**075332** □
1	1	Exchange knife	22,3x14x2	HW		45	2	**075313** ●	**075312** ●

Spare parts:

Part-no.	BEZ	ABM mm	ID
2	Oval head screw Torx® 15	M4x6	**006225** ●
	Torx® key	Torx® 15	**117507** ●

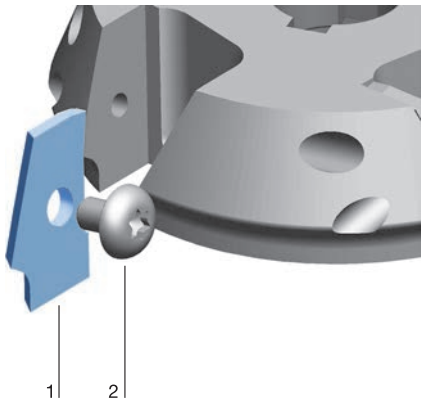

● available ex stock
□ available at short notice
Instruction manual visit www.leitz.org

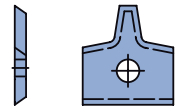
Typ 1


Typ 4

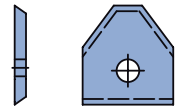
Typ 2

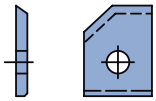
Typ 5

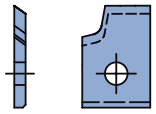
Typ 3


Typ 6

Profile cutterhead / bevel cutterhead

Profile knives for edge finishing

TM 135 0

SB mm	H mm	DIK mm	QAL	Knife	R mm	FAW °	VE PCS	ID LH	ID RH
16	17,5	2	HW	1	2,0		2	**005132** ●	**005132** ●
16	17,5	2	HW	1	3,0		2	**005133** ●	**005133** ●
16	17,5	2	HW	1	4,0		2	**005134** ●	**005134** ●
16	17,5	2	HW	1	5,0		2	**005135** ●	**005135** ●
16	17,5	2	HW	2		45	2		**009525** ●
12	17	2	HW	3	2,0		2	**073554** ●	**073555** ●
12	18	2	HW	3	2,0		2	**074033** □	**074034** □
12	17	2	HW	3	3,0		2	**073558** ●	**073559** ●
12	18	2	HW	3	3,0		2	**074035** □	**074036** □
13	15	2	HW	3	2,0		2	**073505** ●	**073504** ●
13	15	2	HW	3	3,0		2	**073509** ●	**073508** ●
12	14,5	2	HW	4	2,0		2	**075342** ●	**075341** ●
14,5	14,5	2	HW	4	2,5		2		**073544** ●
12	14,5	2	HW	4	3,0		2	**075301** □	**075300** □
12	16	2	HW	5		45	2	**073541** ●	**073540** ●

Profile knives for system Biesse

TM 135 0

Type	BEZ	ABM mm	QAL	R mm	VE PCS	ID LH	ID RH
1	Exchange knife	16x17x2	HW	1,0	2	**074600** □	**074600** □
1	Exchange knife	16x17x2	HW	1,5	2	**074601** □	**074601** □
1	Exchange knife	16x17x2	HW	2,0	2	**074602** ●	**074602** ●
1	Exchange knife	16x17x2	HW	2,5	2	**074603** □	**074603** □
1	Exchange knife	16x17x2	HW	3,0	2	**074604** □	**074604** □
2	Exchange knife	40x17x2	HW	1,0	2	**074610** □	**074611** □
2	Exchange knife	40x17x2	HW	1,5	2	**074612** □	**074613** □
2	Exchange knife	40x17x2	HW	2,0	2	**074614** ●	**074615** ●
2	Exchange knife	40x17x2	HW	2,5	2	**074616** □	**074617** □
2	Exchange knife	40x17x2	HW	3,0	2	**074618** □	**074619** □
3	Exchange knife	20x16x2	HW	1,0	2	**074620** □	**074620** □
3	Exchange knife	20x16x2	HW	1,5	2	**074621** □	**074621** □
3	Exchange knife	20x16x2	HW	2,0	2	**074622** □	**074622** □
3	Exchange knife	20x16x2	HW	2,5	2	**074623** □	**074623** □
3	Exchange knife	20x16x2	HW	3,0	2	**074624** □	**074624** □

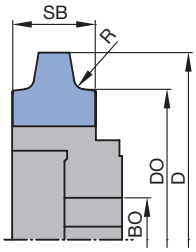

Type 1

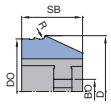

Type 2

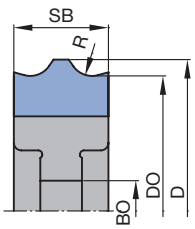

Type 3

Profile knives for system Brandt, Homag

TM 135 0

Type	BEZ	ABM mm	QAL	R mm	VE PCS	ID LH	ID RH
2	Exchange knife	12x13x2	HW	1,5	2	**075339** □	**075339** □
1	Exchange knife	19,6x15,2x2	HW	2,5	2	**075338** □	**075337** □
1	Exchange knife	19,6x15,2x2	HW	2,0	2	**075336** ●	**075335** ●
1	Exchange knife	19,6x15,2x2	HW	1,5	2	**075334** ●	**075333** ●
2	Exchange knife	12x13x2	HW	2,0	2	**075330** ●	**075330** ●
1	Exchange knife	16x13,4x2	HW	3,0	2	**075329** □	**075328** □
1	Exchange knife	16x13,4x2	HW	2,0	2	**075327** □	**075326** □
1	Exchange knife	16x13,4x2	HW	1,5	2	**075325** □	**075324** □
2	Exchange knife	12x13x2	HW	3,0	2	**075304** ●	**075304** ●
1	Exchange knife	19,6x15,2x2	HW	3,0	2	**075303** ●	**075302** ●

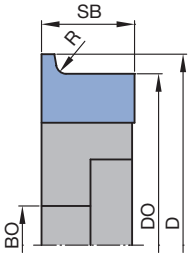

Type 1

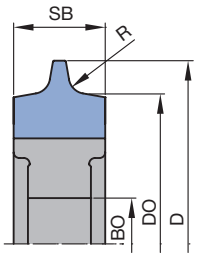

Type 2

● available ex stock
□ available at short notice
Instruction manual visit www.leitz.org

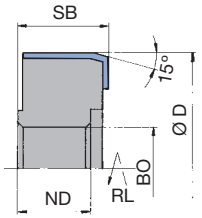

Type 4: WW 500 2 03

Profile knives for system Holz-Her

TM 435 0

BEZ	ABM mm	QAL	VE PCS	DRI	ID
Turnblade knife	30x12x1,5,PT1,3	HW	2	RH	**005088** ●
Turnblade knife	30x12x1,5,PT1,3	HW	2	LH	**005089** ●

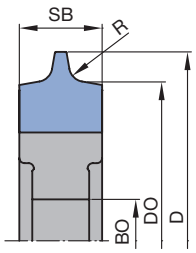

Type 1

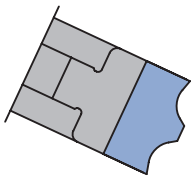

Type 2

Profile knives for system Ott

TM 135 0

Type	BEZ	ABM mm	QAL	R mm	VE PCS	ID LH	ID RH
1	Exchange knife	16x17,5x2	HW	1,0	2	**074540** □	**074540** □
2	Exchange knife	16x17,5x2	HW	1,5	2	**009539** ●	**009539** ●
1	Exchange knife	16x17,5x2	HW	2,0	2	**005132** ●	**005132** ●
1	Exchange knife	16x18,5x2	HW	2,5	2	**074543** □	**074543** □
2	Exchange knife	16x17,5x2	HW	3,0	2	**005133** ●	**005133** ●
1	Exchange knife	16x19,5x2	HW	3,5	2	**074545** □	**074545** □
2	Exchange knife	25x15x2	HW	1,0	3	**619194**	**619194**
2	Exchange knife	25x15x2	HW	2,0	3	**619196** ●	**619196** ●

● available ex stock
□ available at short notice
Instruction manual visit www.leitz.org

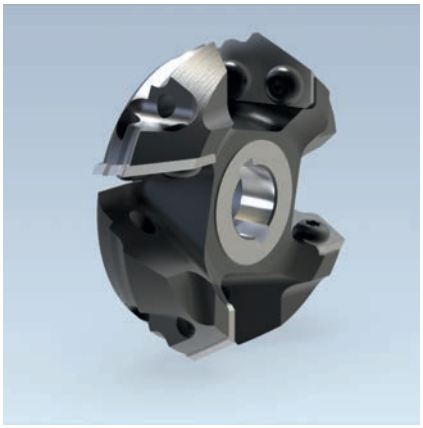


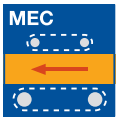






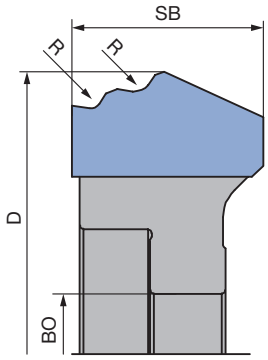

Multi-profile cutterhead / bevel cutterhead

Application:
For a choice of radii or bevels on edgebandings.

Machine:
Single or double-sided edgebanding machines.

Workpiece material:
Plastic, softwood, hardwood and veneer edgebander.

Technical information:
Cutterheads with HW knives and cylindrical bore with DKN. D_0 = constant reference diameter. DFC design for highly efficient chip clearance of more than 97%. Various radii bevel combinations available.

Various profiles - DFC, Homag
WE 500 2

Machine	D mm	SB mm	BO mm	Z	R mm	FAW °	ID LH	ID RH
Homag	74,67	25,28	16 DKN	4	1/2		**075092** ●	**075093** ●
Homag	74,67	25,28	16 DKN	4	1,3/2		**075100** ●	**075101** ●
Homag	74,67	25,28	16 DKN	4	1/3		**075094** ●	**075095** ●
Homag	74,67	25,28	16 DKN	4	2/3		**075112** □	**075113** □
Homag	74,67	25,28	16 DKN	4	1/1,5		**075090** ●	**075091** ●
Homag	74,67	25,28	16 DKN	4	1,5/2		**075106** □	**075107** □
Homag	74,67	25,28	16 DKN	4	1,5/3		**075108** □	**075109** □
Homag	74,67	25,28	16 DKN	4	1	15	**075114** □	**075115** □
Homag	74,67	25,28	16 DKN	4	1,3/3		**075102** □	**075103** □
Homag	74,67	25,28	16 DKN	4	2	30	**075130** □	**075131** □
Homag	74,67	25,28	16 DKN	4	2	15	**075120** □	**075121** □
Homag	74,67	25,28	16 DKN	4	1/1,3		**075088** □	**075089** □
Homag	74,67	25,28	16 DKN	4	2	45	**075140** □	**075141** □
Homag	74,67	25,28	16 DKN	4	1	45	**075134** □	**075135** □
Homag	74,67	25,28	16 DKN	4	1,3	45	**075136** □	**075137** □
Homag	74,67	25,28	16 DKN	4	1,5	45	**075138** □	**075139** □
Homag	74,67	25,28	16 DKN	4	1,5	30	**075128** □	**075129** □
Homag	74,67	25,28	16 DKN	4	2/2		**075110** □	**075111** □
Homag	74,67	25,28	16 DKN	4	1,3/1,3		**075096** □	**075097** □
Homag	74,67	25,28	16 DKN	4	1,5/1,5		**075104** □	**075105** □
Homag	74,67	25,28	16 DKN	4	1	30	**075124** □	**075125** □
Homag	74,67	25,28	16 DKN	4	1,3/1,5		**075098** □	**075099** □
Homag	74,67	25,28	16 DKN	4	1.3	30	**075126** □	**075127** □
Homag	74,67	25,28	16 DKN	4	3	30	**075132** □	**075133** □
Homag	74,67	25,28	16 DKN	4	3	45	**075142** □	**075143** □
Homag	74,67	25,28	16 DKN	4	1/1		**075086** □	**075087** □

Further radii combinations available at short notice.

Spare knives:

Part-no.	BEZ	ABM mm	QAL	R mm	FAW °	VE PCS	ID LH	ID RH
1	Exchange knife	25.67x16.5x2	HW	1/2		2	**075706** ●	**075707** ●
1	Exchange knife	25.67x16.5x2	HW	1,3/2		2	**075714** ●	**075715** ●
1	Exchange knife	25.67x16.5x2	HW	1/3		2	**075708** ●	**075709** ●
1	Exchange knife	25.67x16.5x2	HW	2/3		2	**075726** □	**075727** □
1	Exchange knife	25.67x16.5x2	HW	1/1,5		2	**075704** ●	**075705** ●
1	Exchange knife	25.67x16.5x2	HW	1,5/2		2	**075720** □	**075721** □
1	Exchange knife	25.67x16.5x2	HW	1,5/3		2	**075722** □	**075723** □
1	Exchange knife	25.67x16.5x2	HW	1	15	2	**075728** □	**075729** □
1	Exchange knife	25.67x16.5x2	HW	1,3/3		2	**075716** ●	**075717** ●
1	Exchange knife	25.67x16.5x2	HW	2	30	2	**075744** □	**075745** □
1	Exchange knife	25.67x16.5x2	HW	2	15	2	**075734** □	**075735** □
1	Exchange knife	25.67x16.5x2	HW	1/1,3		2	**075702** ●	**075703** ●
1	Exchange knife	25.67x16.5x2	HW	2	45	2	**075754** ●	**075755** ●
1	Exchange knife	25.67x16.5x2	HW	1	45	2	**075748** ●	**075749** □
1	Exchange knife	25.67x16.5x2	HW	1,3	45	2	**075750** □	**075751** □
1	Exchange knife	25.67x16.5x2	HW	1,5	45	2	**075752** □	**075753** □
1	Exchange knife	25.67x16.5x2	HW	1,5	30	2	**075742** □	**075743** □
1	Exchange knife	25.67x16.5x2	HW	2/2		2	**075724** ●	**075725** ●

● available ex stock
□ available at short notice
Instruction manual visit www.leitz.org

Part-no.	BEZ	ABM mm	QAL	R mm	FAW °	VE PCS	ID LH	ID RH
1	Exchange knife	25.67x16.5x2	HW	1,3/1,3		2	**075710** □	**075711** □
1	Exchange knife	25.67x16.5x2	HW	1,5/1,5		2	**075718** □	**075719** □
1	Exchange knife	25.67x16.5x2	HW	1	30	2	**075738** □	**075739** □
1	Exchange knife	25.67x16.5x2	HW	1,3/1,5		2	**075712** □	**075713** □
1	Exchange knife	25.67x16.5x2	HW	1.3	30	2	**075740** □	**075741** □
1	Exchange knife	25.67x16.5x2	HW	3	30	2	**075746** □	**075747** □
1	Exchange knife	25.67x16.5x2	HW	3	45	2	**075756** □	**075757** □
1	Exchange knife	25.67x16.5x2	HW	1/1		2	**075700** □	**075701** □

Further radii combinations available at short notice.

Spare parts:

Part-no.	BEZ	ABM mm	ID
2	Oval head screw Torx® 15	M4x6	**006225** ●
	Torx® key	Torx® 15	**005466** ●

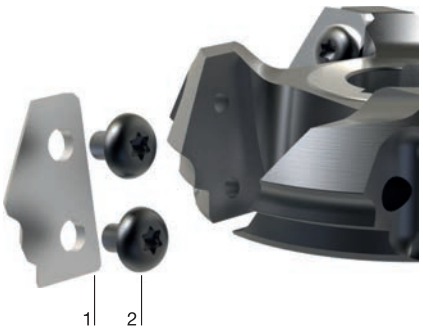

Spare knives - two-part knife design (until 03/2023)
TM 135 0

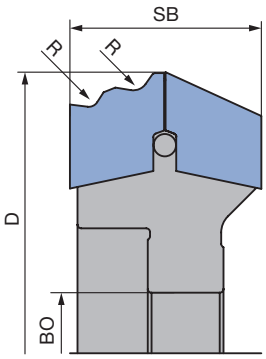

Type	BEZ	ABM mm	QAL	R mm	FAW °	VE PCS	ID LH	ID RH
1	Exchange knife	17,9x14,2x2	HW	1/1,5		2	**075365** ●	**075366** ●
1	Exchange knife	17,9x14,2x2	HW	1/2		2	**075347** ●	**075348** ●
1	Exchange knife	17,9x14,2x2	HW	1/3		2	**075351** ●	**075352** ●
1	Exchange knife	17,9x14,2x2	HW	1,3/2		2	**075349** ●	**075350** ●
1	Exchange knife	17,9x14,2x2	HW	1,3/3		2	**075373** ●	**075374** ●
1	Exchange knife	17,9x14,2x2	HW	1,5/2		2	**075367** ●	**075368** ●
1	Exchange knife	17,9x14,2x2	HW	1,5/3		2	**075369** □	**075370** □
1	Exchange knife	17,9x14,2x2	HW	2/3		2	**075353** ●	**075354** ●
1	Exchange knife	17,9x14,2x2	HW	1	15	2	**075371** □	**075372** □
1	Exchange knife	17,9x14,2x2	HW	2	30	2	**075201** □	**075202** □
2	Exchange knife	18,1x13,5x2	HW			2	**075355** ●	**075356** ●

Spare parts:

Part-no.	BEZ	ABM mm	ID
3	Oval head screw Torx® 15	M4x6	**006225** ●
	Torx® key	Torx® 15	**005466** ●

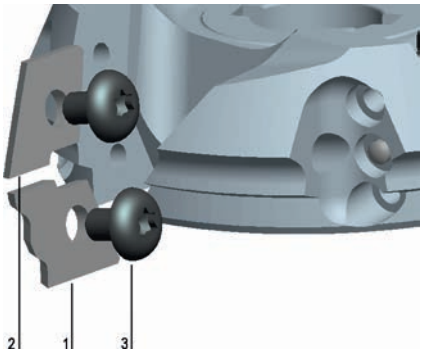

● available ex stock
□ available at short notice
Instruction manual visit www.leitz.org





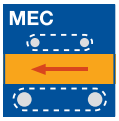



HW

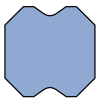

Type 1

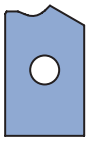

Type 2



Type 3

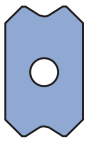

Type 4



Type 5



Type 6

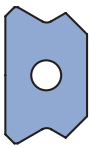

Type 7



Type 8

Profile scrapers

Application:
For scraping edgebandings with radii or bevels.

Machine:
Single or double-sided edgebanding machines.

Workpiece material:
Plastic edgebandings.

Technical information:
Bevel and radius scraper for scraper holder.

Profile scrapers
TM 130 0, TM 435 0

Machine	SB mm	H mm	DIK mm	R mm	FAW °	Type	QAL	VE PCS	ID	ID left
Biesse	12,7	12,7	3,18	1,0		1	HW	2	**074548** ●	
Biesse	12,7	12,7	3,18	1,5		1	HW	2	**074549** ●	
Biesse	12,7	12,7	3,18	2,0		1	HW	2	**074550** ●	
Biesse	12,7	12,7	3,18	3,0		1	HW	2	**074551** □	
Fravol	12	20	2	1-3		2	TDC	2	**074640** ●	**074639** ●
Holz-Her	12	20	2		45	4	HW	2	**074037** ●	
Holz-Her	12	20	2	1,0		4	HW	2	**074039** ●	
Holz-Her	12	20	2	1,5		4	HW	2	**074074** ●	
Holz-Her	12	20	2	2,0		4	HW	2	**074040** ●	
Holz-Her	12	20	2	2,5		4	HW	2	**074075** □	
Holz-Her	12	20	2	3,0		4	HW	2	**074041** ●	
Holz-Her ZK701	12	19	2		10	3	HW	2	**074576** □	**074575** □
Holz-Her ZK701	12	19	2	1,0		3	HW	2	**074562** □	**074561** □
Holz-Her ZK701	12	19	2	1,3		3	HW	2	**074564** □	**074563** □
Holz-Her ZK701	12	19	2	2,0		3	HW	2	**074568** □	**074567** □
Holz-Her ZK701	12	19	2	3,0		3	HW	2	**074572** □	**074571** □
Homag	12	20	2		45	4	HW	2	**074037** ●	
Homag	12	20	2	1,0		4	HW	2	**074039** ●	
Homag	12	20	2	1,5		4	HW	2	**074074** ●	
Homag	12	20	2	2,0		4	HW	2	**074040** ●	
Homag	12	20	2	2,5		4	HW	2	**074075** □	
Homag	12	20	2	3,0		4	HW	2	**074041** ●	
Homag	12	20	2		45	5	HW	2	**073724** □	
Homag	12	20	2	1,0		5	HW	2	**073725** ●	
Homag	12	20	2	1,5		5	HW	2	**073726** ●	
Homag	12	20	2	2,0		5	HW	2	**073727** ●	
Homag	12	20	2	2,5		5	HW	2	**073728** □	
Homag	12	20	2	3,0		5	HW	2	**073729** ●	
Homag	20	11,5	2	1,0		6	HW	2	**073713** ●	
Homag	20	11,5	2	1,5		6	HW	2	**073714** □	
Homag	20	11,5	2	2,0		6	HW	2	**073715** ●	
Homag	20	11,5	2	3,0		6	HW	2	**073716** □	
IMA	12	20	2		45	4	HW	2	**074037** ●	
IMA	12	20	2	1,0		7	HW	2	**074044** ●	
IMA	12	20	2	1,5		7	HW	2	**074076** ●	
IMA	12	20	2	2,0		7	HW	2	**074021** ●	
IMA	12	20	2	2,5		7	HW	2	**074077** □	
IMA	12	20	2	3,0		7	HW	2	**074022** ●	
Ott	12	13,3	3,3	1,0		8	HW	2	**074653** ●	
Ott	12	13,3	3,3	2,0		8	HW	2	**074654** ●	
SCM	12	20	2	2,0		4	HW	2	**074040** ●	
Stefani	12,7	12,7	3,18	1,0		1	HW	2	**074548** ●	
Stefani	12,7	12,7	3,18	1,5		1	HW	2	**074549** ●	
Stefani	12,7	12,7	3,18	2,0		1	HW	2	**074550** ●	
Stefani	12,7	12,7	3,18	3,0		1	HW	2	**074551** □	

Additional scrapers available on request at short notice.

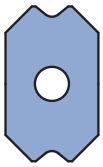

Type 1

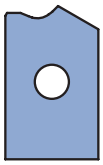

Type 2



Type 3

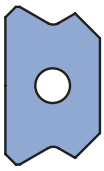

Type 4

Technical information:
Prevention of stress-whitening and rework through special cutting geometry and quality. Scraper turnblades with different radii for adaption in scraper holder.

Profile scrapers with anti-stress whitening bevel
TM 435 0

Machine	SB mm	H mm	DIK mm	R mm	FAW °	Type	QAL	VE PCS	ID	ID left
Brandt	12	20	2		45	1	HW	2	**074103** □	
Brandt	12	20	2	1,0		1	HW	2	**074095** ●	
Brandt	12	20	2	1,3		1	HW	2	**074096** ●	
Brandt	12	20	2	1,5		1	HW	2	**074097** ●	
Brandt	12	20	2	2,0		1	HW	2	**074098** ●	
Brandt	12	20	2	3,0		1	HW	2	**074100** □	
EBM	12	20	2		45	1	HW	2	**074103** □	
EBM	12	20	2	1,0		1	HW	2	**074095** ●	
EBM	12	20	2	1,3		1	HW	2	**074096** ●	
EBM	12	20	2	1,5		1	HW	2	**074097** ●	
EBM	12	20	2	2,0		1	HW	2	**074098** ●	
EBM	12	20	2	3,0		1	HW	2	**074100** □	
Fravol	15,44	20	2	1-3		2	TDC	2	**074642** ●	**074641** ●
Hebrock	12	20	2	1,0		1	HW	2	**074095** ●	
Hebrock	12	20	2	1,3		1	HW	2	**074096** ●	
Hebrock	12	20	2	1,5		1	HW	2	**074097** ●	
Hebrock	12	20	2	2,0		1	HW	2	**074098** ●	
Hebrock	12	20	2	3,0		1	HW	2	**074100** □	
Holz-Her	12	20	2		45	1	HW	2	**074103** □	
Holz-Her	12	20	2	1,0		1	HW	2	**074095** ●	
Holz-Her	12	20	2	1,3		1	HW	2	**074096** ●	
Holz-Her	12	20	2	1,5		1	HW	2	**074097** ●	
Holz-Her	12	20	2	2,0		1	HW	2	**074098** ●	
Holz-Her	12	20	2	3,0		1	HW	2	**074100** □	
Homag	12	20	2		45	1	HW	2	**074103** □	
Homag	12	20	2	1,0		1	HW	2	**074095** ●	
Homag	12	20	2	1,3		1	HW	2	**074096** ●	
Homag	12	20	2	1,5		1	HW	2	**074097** ●	
Homag	12	20	2	2,0		1	HW	2	**074098** ●	
Homag	12	20	2	3,0		1	HW	2	**074100** □	
Homag	20	11,5	2	1,0		3	HW	2	**073719** □	
Homag	20	11,5	2	1,5		3	HW	2	**073720** □	
Homag	20	11,5	2	2,0		3	HW	2	**073721** ●	
Homag	20	11,5	2	3,0		3	HW	2	**073723** ●	
IMA	12	20	2		45	1	HW	2	**074103** □	
IMA	12	20	2	1,0		4	HW	2	**074090** ●	
IMA	12	20	2	1,3		4	HW	2	**074101** □	
IMA	12	20	2	1,5		4	HW	2	**074091** ●	
IMA	12	20	2	2,0		4	HW	2	**074092** ●	
IMA	12	20	2	3,0		4	HW	2	**074094** □	

Spare parts:

BEZ	ABM mm	ID
Torx® key	Torx® 15	**005466** ●
Oval head screw Torx® 15	M4x6	**006225** ●

● available ex stock
□ available at short notice
Instruction manual visit www.leitz.org

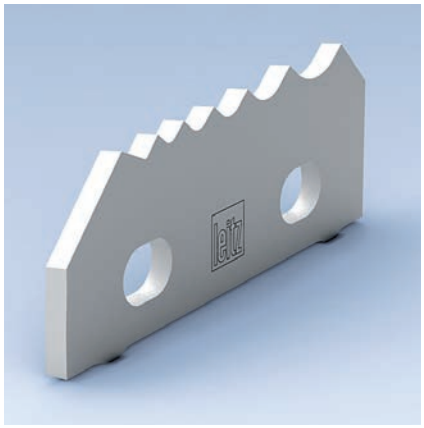



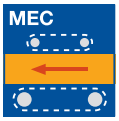



HW

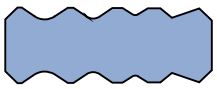

Type 1

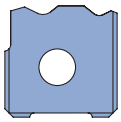

Type 2

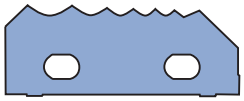

Type 3

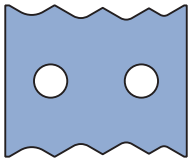

Type 4

Multi-profile scrapers

Application:
For scraping edgebandings with radii or bevels.

Machine:
Single or double-sided edgebanding machines.

Workpiece material:
Plastic edgebandings.

Technical information:
Multi-profile scraper with a choice of bevels and radii.

Multi-profile scrapers
TM 135 0

Machine	SB mm	H mm	DIK mm	R mm	FAW °	Type	QAL	VE PCS	ID	ID left
Biesse	34	12,7	3	1/2/3	Fase	1	HW	2	**074082** ●	
Brandt	13,5	13,38	2	1/3		2	HW	2	**075362** ●	**075361** ●
Brandt	13,5	13,38	2	1/2		2	HW	2	**075358** ●	**075357** ●
Brandt	13,5	13,38	2	1/1,5		2	HW	2	**075376** ●	**075375** □
Brandt	13,5	13,38	2	1,3/3		2	HW	2	**075380** ●	**075379** ●
Brandt	13,5	13,38	2	1,3/2		2	HW	2	**075360** ●	**075359** ●
Brandt	13,5	13,38	2	1,5/2		2	HW	2	**075378** ●	**075377** ●
Brandt	13,5	13,38	2	2/3		2	HW	2	**075364** ●	**075363** ●
Brandt	13,5	13,38	2	2	30	2	HW	2	**075398** □	**075397** □
Homag	13,5	13,38	2	1/3		2	HW	2	**075362** ●	**075361** ●
Homag	13,5	13,38	2	1/2		2	HW	2	**075358** ●	**075357** ●
Homag	13,5	13,38	2	1/1,5		2	HW	2	**075376** ●	**075375** □
Homag	13,5	13,38	2	1,3/3		2	HW	2	**075380** ●	**075379** ●
Homag	13,5	13,38	2	1,3/2		2	HW	2	**075360** ●	**075359** ●
Homag	13,5	13,38	2	1,5/2		2	HW	2	**075378** ●	**075377** ●
Homag	13,5	13,38	2	2/3		2	HW	2	**075364** ●	**075363** ●
Homag	13,5	13,38	2	2	30	2	HW	2	**075398** □	**075397** □
Homag	45,8	17,95	2	1/1,5/2/3/5	20	3	HW	2	**074050** ●	**074049** ●
IMA	24	20	2	1/1,5/2/3		4	HW	2	**074106** ●	
IMA	24	20	2	1/2/3		4	HW	2	**074107** ●	
Stefani	34	12,7	3	1/2/3	Fase	1	HW	2	**074080** □	

Spare parts:

BEZ	ABM mm	ID
Torx® key	Torx® 15	**005466** ●
Oval head screw Torx® 15	M4x6	**006225** ●

Technical information:
Prevention of stress-whitening and rework through special bevel. Multi-profile scraper with different bevels and radii.

Multi-profile scraper with anti stress-whitening bevel
TM 135 0

Machine	SB mm	H mm	DIK mm	R mm	FAW °	Type	QAL	VE PCS	ID	ID left
Homag	45,8	17,074	2	1/1,5/2/2,5/3	20	3	HW	2	**073105** ●	**073104** ●

Further radii combinations with anti-stress whitening bevel available at short time.

Spare parts:

BEZ	ABM mm	ID
Torx® key	Torx® 15	**005466** ●
Oval head screw Torx® 15	M4x6	**006225** ●

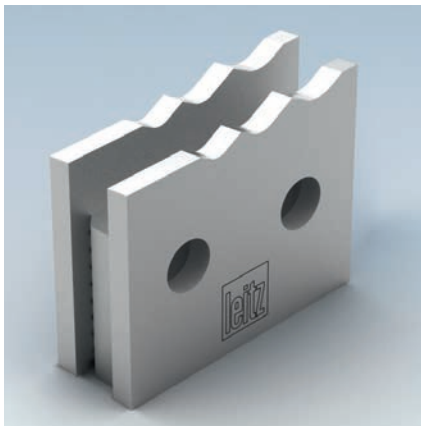



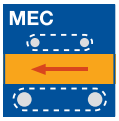



HW

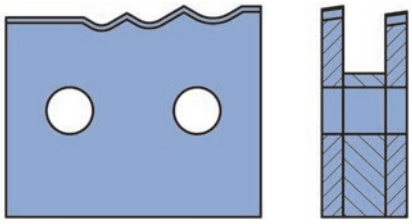

Duo multi-profile scraper Type 1
(all profiles in Duo design)

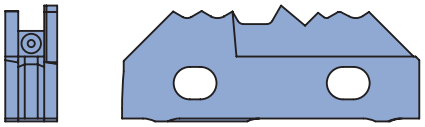

Duo multi-profile scraper Type 2
(2 profiles in Duo design)

Multi-profile scrapers

Application:
For scraping edgebandings with radii or bevels. Especially for colour fastness and anti-stress whitening for dark edges and high gloss PMMA edges.

Machine:
Single or double-sided edgebanding machines or double-end tenoners.

Workpiece material:
Plastic edgebander as PP, ABS, PMMA etc.

Technical information:
Duo multi-profile scraper with different radii and bevels for 4 profiles in total. Staggered cut on two consecutively arranged scrapers with special micro geometry for high edge quality, colour fastness, high gloss level and without stress-whitening. Especially in conjunction with jointless edgebanding.
Attention: Only applicable on standard scraper aggregates with special profile scraper holders.

Duo multi-profile scraper
TM 135 0, TM 435 0

Machine	SB mm	H mm	DIK mm	R mm	FAW °	Type	QAL	ID	ID left
Homag	45,8	19,94	8	1,3/2,0 (Duo) 0,6/1,5	5	2	HW	**073731** □	**073730** □
IMA	24	19,8	8	1/2/3	45	1	HW	**074089** □	**074088** □
IMA	23,7	19,8	8	1,3/1,5/2	45	1	HW	**074085** □	**074084** □

Further radii combinations available at short notice.

● available ex stock
□ available at short notice
Instruction manual visit www.leitz.org

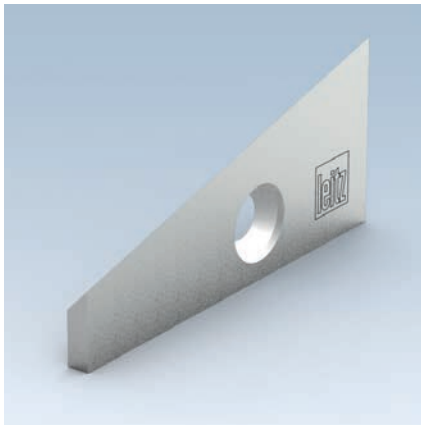



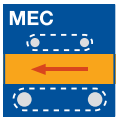



HW



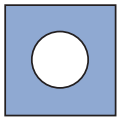

Type 1

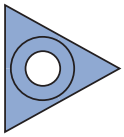

Type 2

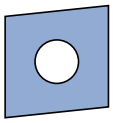

Type 3

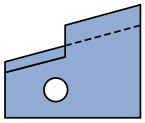

Type 4

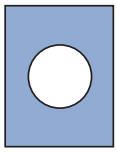

Type 5

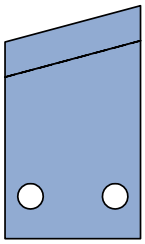

Type 6

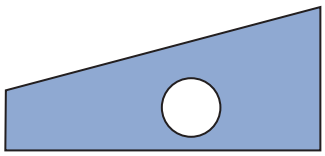

Type 7

Flat scrapers

Application:
For scraping edgebandings and glue.

Machine:
Single or double-sided edgebanding machines.

Workpiece material:
Plastic edgebandings.

Technical information:
Different profile flat scrapers.

Flat scraper knives
TC 105 0, TM 135 0, TM 405 0, TM 440 0, TM 480 0

Machine	SB mm	H mm	DIK mm	FAW °	Type	QAL	VE PCS	ID	ID left
Biesse	16	16	4,7		1	HW	2	**074556**	
Biesse	22,9	22,9	2,5		2	HW	2	**074555** ●	
Brandt	15	14,3	2,5	6	3	MC	2	**074579** ●	**074578** ●
Brandt	15	14,3	2,5	6	3	HW	2	**074501** ●	**074500** ●
EBM	36	30	3		4	HW	2	**074635** ●	**074634** ●
Fravol	20	12	1,5		5	HW	2	**074638** ●	
Hebrock	36	30	3		4	HW	2	**074635** ●	**074634** ●
Holz-Her	14	14	2		1	HW	2	**009546** ●	
Homag	14,3	14,3	2,5		1	HW	10	**005426** ●	
Homag	15	14,3	2,5	6	3	MC	2	**074579** ●	**074578** ●
Homag	15	14,3	2,5	6	3	HW	2	**074501** ●	**074500** ●
Homag	32	55	4,5	15	6	HW	2	**074048** ●	**074047** ●
IMA	14,3	14,3	2,5		1	HW	2	**074305** ●	
IMA	55	25	3	15	7	HW	2	**074024** ●	**074023** ●
IMA BAZ	11	14,3	2,5		5	HW	2	**074306**	
Ott	15	14,3	2,5	6	3	MC	2	**074579** ●	**074578** ●
Ott	15	14,3	2,5	6	3	HW	2	**074501** ●	**074500** ●
SCM	14	14	2		1	HW-F	10	**005099** ●	

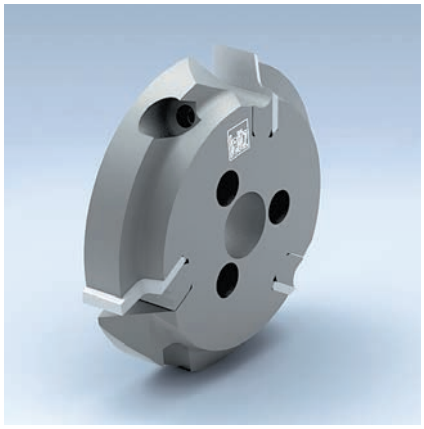



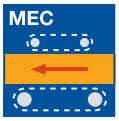



HW

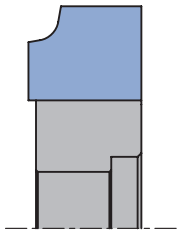

Type 1

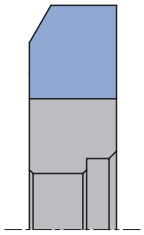

Type 2

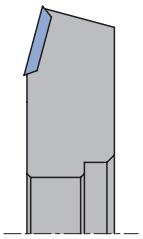

Type 3

Profile cutterhead / bevel cutterhead for stationary machines

Application:
To round/bevel edgebandings.

Machine:
Homag BAZ.

Workpiece material:
Plastic, softwood, hardwood and veneer edgebander.

Technical information:
Cutterheads with HW knives for edge trimming cutter aggregate. Tool centering at recess diameter 19 mm. The same cutterhead tool body suitable for R 1.0 to 3.0 mm. D_0 = constant reference diameter.

Various radii / bevels - Homag
WE 500 2

D mm	D_0 mm	BO mm	NLA mm	Z	QAL	R mm	FAW °	Type	n_{max} min^{-1}	ID LH	ID RH
59	50	15	3/4,2/25	3	HW	1,0		1	18000	**073001** □	**073000** □
59	50	15	3/4,2/25	3	HW	1,5		1	18000	**073003** □	**073002** □
59	50	15	3/4,2/25	3	HW	2,0		1	18000	**073005** ●	**073004** ●
59	50	15	3/4,2/25	3	HW	3,0		1	18000	**073009** □	**073008** □
60	50	15	3/4,2/25	3	HW		45	2	18000	**073041**	**073040**
62	50	15	3/4,2/25	3	HW		15	3	18000	**073101**	**073100**

Type 3 for special thin edgebandings.

Spare knives:

Part-no.	SB mm	H mm	DIK mm	QAL	R mm	FAW °	Type	VE PCS	ID LH	ID RH
1	13	15	2	HW	1,0		1	3	**073501** ●	**073500** ●
1	13	15	2	HW	1,5		1	3	**073503** ●	**073502** ●
1	13	15	2	HW	2,0		1	2	**073505** ●	**073504** ●
1	13	15	2	HW	3,0		1	2	**073509** ●	**073508** ●
1	12	16	2	HW		45	2	2	**073541** ●	**073540** ●
1	14	14	2	HW-F			3	10	**005099** ●	**005099** ●

Spare parts:

Part-no.	BEZ	ABM mm	ID
2	Clamping wedge RH	11,5x14,4x7	**073400** ●
2	Clamping wedge LH	11,5x14,4x7	**073401** ●
3	Allen screw	M6x12	**006035**
3	Countersink screw, Torx® 20	M6x0.5x4.9	**006243** ●
	Torx® key	Torx® 20	**006091** ●
	Setting gauge for knives	43x12x6	**005350** ●

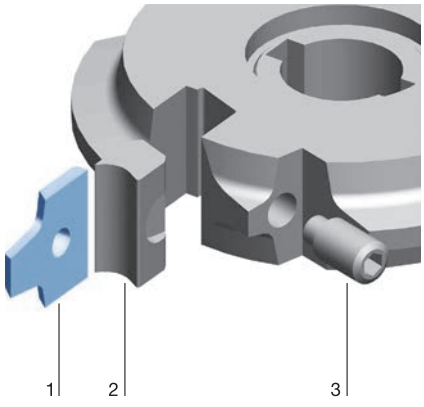

● available ex stock
□ available at short notice
Instruction manual visit www.leitz.org

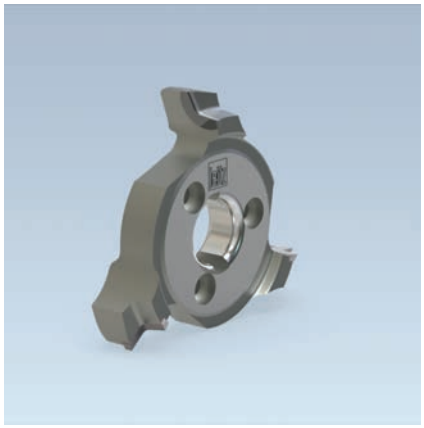



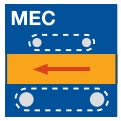



DP

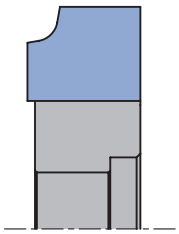

Type 1

Profile cutter / bevel cutter for stationary machines

Application:
To round/bevel edgebandings.

Machine:
Homag BAZ.

Workpiece material:
Plastic, softwood, hardwood and veneer edgebander.

Technical information:
DP tipped tool with interface for edge trimming cutter aggregate. Tool centering at recess diameter 19 mm. D_0 = constant reference diameter.

Radii cutter DP - Homag
WF 501 2 DP

D mm	D_0 mm	BO mm	NLA mm	Z	QAL	R mm	n_{max} min^{-1}	ID LH	ID RH
57	50	15	3/4,2/25	3	DP	2,0	18000	**073103** □	**073102** □
57	50	15	3/4,2/25	3	DP	3,0	18000	**091522** □	**091523** □

Rebating

Milling off the wooden composite board to uncover the cover layer, application mostly with feed.

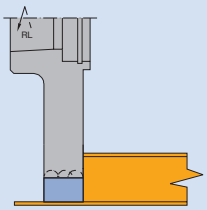

Scoring

Hogging
Compact hogger DT Premium, page 16
Cutting and segment hogger, page 18

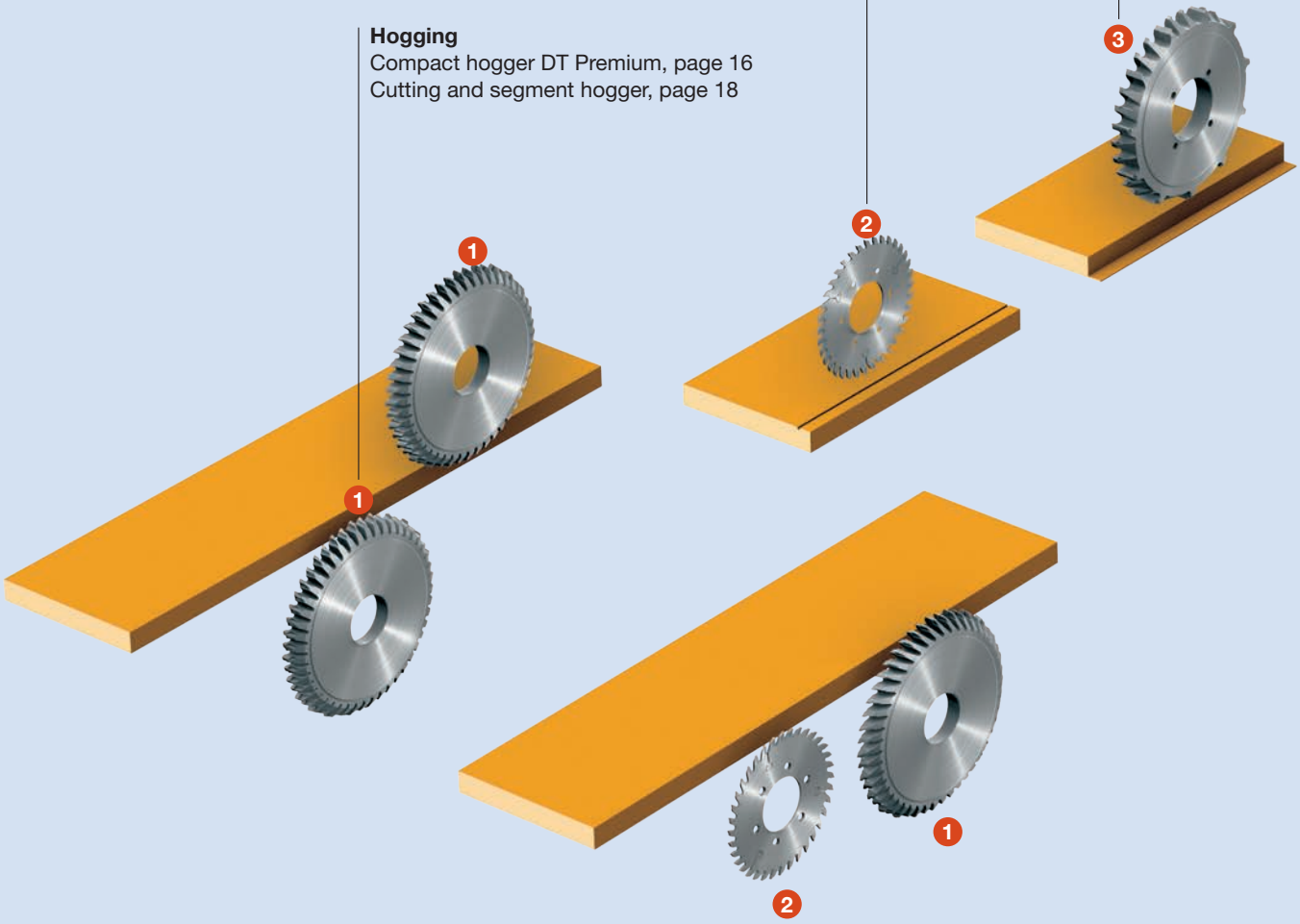

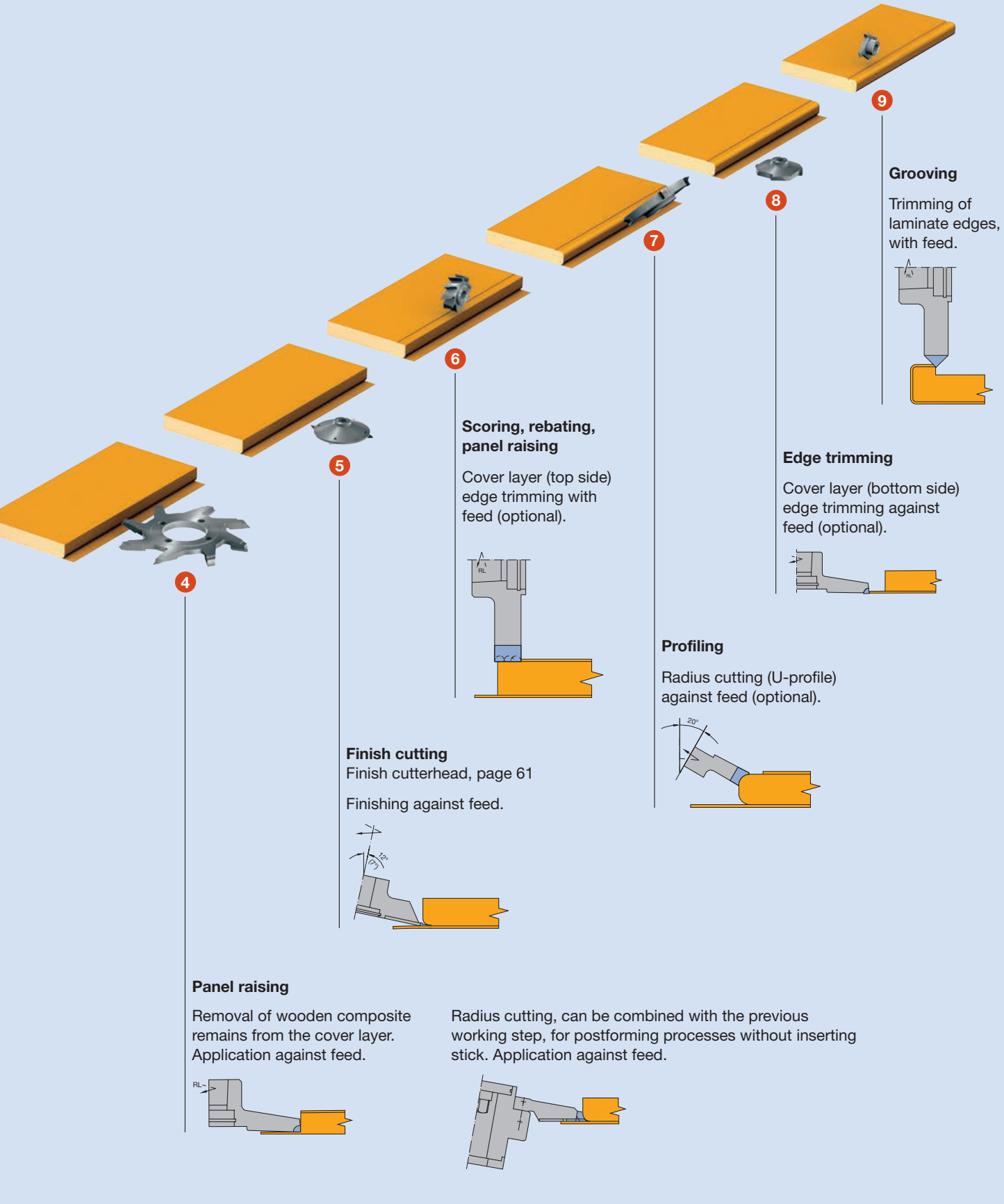
4
5
6
7
8
9
Panel raising
Removal of wooden composite remains from the cover layer. Application against feed.
RL
Finish cutting
Finish cutterhead, page 61
Finishing against feed.
12°
Scoring, rebating, panel raising
Cover layer (top side) edge trimming with feed (optional).
RL
Radius cutting, can be combined with the previous working step, for postforming processes without inserting stick. Application against feed.
Profiling
Radius cutting (U-profile) against feed (optional).
20°
Edge trimming
Cover layer (bottom side) edge trimming against feed (optional).
Grooving
Trimming of laminate edges, with feed.
RL

Working processes	Production of workpieces with narrow edges for profiling and coating with edging material.
Workpiece material	Chipboard and fibre materials (e.g. MDF boards).
Machines	Single or double-sided soft forming machines.
Procedure	Sizing panel by scoring hogging or double hogging, protection milling, if required. Scoring and removing the coating on the workpiece surface by horizontal spindle. Profiling the narrow edge with vertical, horizontal or inclined spindles. Cutting the edgebanding on the sized side to a precise dimension with the tracing spindle. Edge trimming of the banding on the side banded first with tracing spindle. Scraping, if required.
Important order data	– Profile – Coating thickness – Coating material – Machine side – Number of sides to be coated – Expected profile production volume Given the diversity of products, standard tools and special tools are used in soft forming according to requirements.
Profile examples	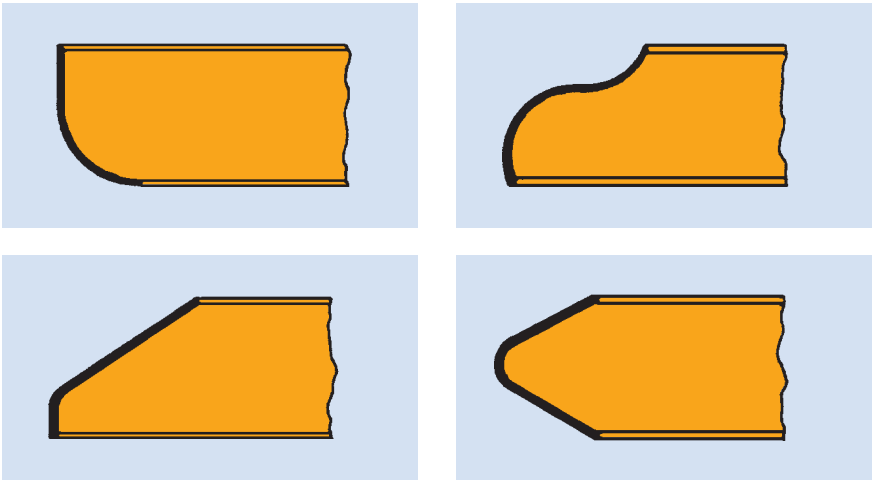
Working process	Production of workpieces with profiled narrow edges with jointless HPL, CPL or veneer surface coating material wrapped around the narrow face.
Workpiece material	Chipboard and fibre materials (e.g. MDF).
Machines	Single or double-sided post forming machines.
Important ordering information	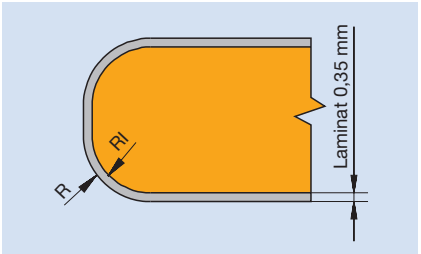 – Radius and internal radius – Coating thickness – Material thickness – Type of coating – Post forming with or without inlay rod – Machine side R = External radius, e.g. R9 RI = Internal radius, e.g. R8,65

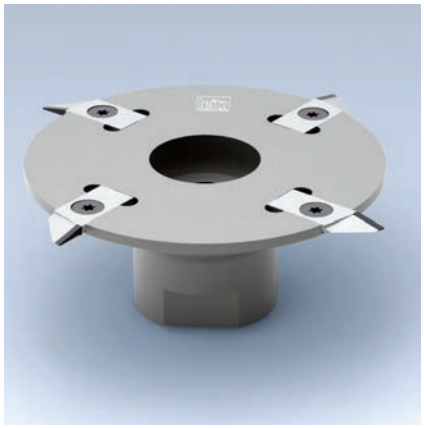



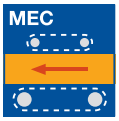



DP

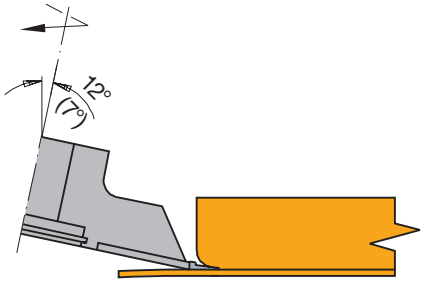

Finish cutting radii up to R 14 mm at 7° and 12° spindle angle

Finishing cutterhead

Application:
To finish cut the radius of postforming profiles.

Machine:
Postforming machines.

Workpiece material:
HPL, CPL or veneer-coated chip- and fibre boards (particle board, MDF etc.).

Technical information:
Spare knives for cutterhead with DP profile knives and cylindrical bore or HSK 25 R adaptor. Suitable for finish cutting radii up to R 14. Non-resharpenable knives 0.5 mm optimised for sensitive coatings, veneer postforming and maximum contour accuracy.

Spare knives for finishing cutterheads
TM 160 0

BEZ	ABM mm	QAL	ID LH	ID RH
Knife	12x31x2,5x0,5, SB2,5	DP	**008208** ●	**008204** ●

Spare knives for 7° and 12° inclined spindles.

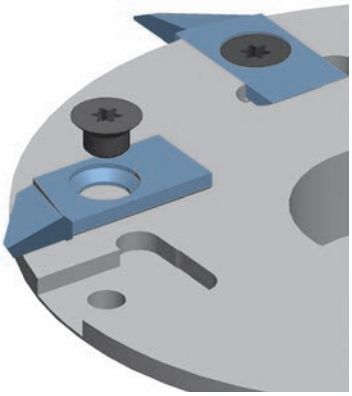

Segment hogger

The cut edge quality of the sizing and finish cuts depends on the circular sawblades. Tool body in steel or aluminium. Staggered cut with tungsten carbide segments. Assembly on flanged sleeve or direct assembly on the motor spindle without flanged sleeve depends on the design.

Designs

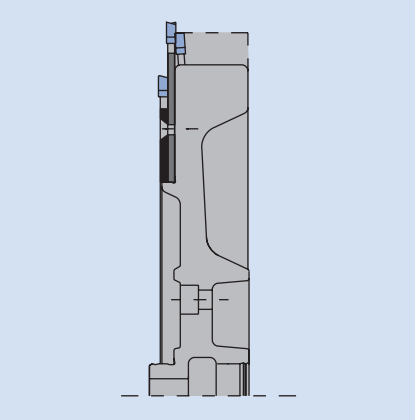

Toolset for finish-production unit with sizing and finish cut

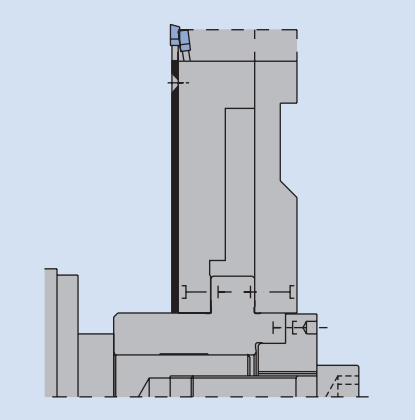

Toolset for sizing unit mounted on flanged sleeve







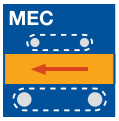





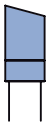

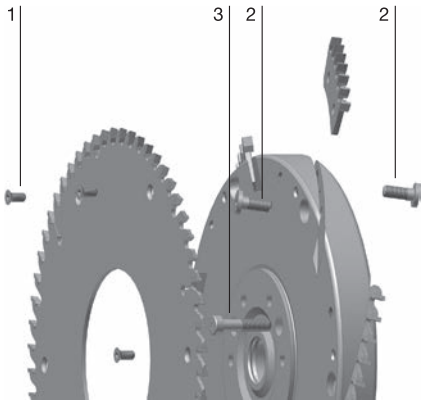

Segment hogger for sizing unit

Application:
For hogging along and across grain with/without scoring sawblade.

Machine:
Sizing station in production lines.

Workpiece material:
Chip and fibre boards (MDF etc.) uncoated, veneered, plastic coated.

Technical information:
The cut edge quality depends on the circular sawblade. Tool body D 305 mm in steel or D 355 mm in aluminium. Staggered cut with six tungsten carbide segments. Build up option with extension hogger unit. For D 305 mm the hogger is mounted directly on the spindle without flanged sleeve.

Hogger for sizing unit
SZ 300 2, SZ 301 2

Machine	D mm	SB mm	BO mm	$Z/ZF_{Sawblade}$	QAL	ID LH	ID RH
Siempelkamp	305	60,1	30	60/ES	HW	**064700** □	**064701** □
Siempelkamp	355	60,5	40 DKN	72/ES	HW	**064702**	**064703**

Spare parts:

Part-no.	BEZ	ABM mm	Z	ZF	QAL	BEM	ID
	Basic hogger	300x28,0x30	6x7	FZ	HW		**064440** ●
	Basic hogger	300x28,0x30	6x7	FZ	HW		**064441** ●
	Basic hogger	350x36,5x80	6x10	FZ	HW		**064442**
	Basic hogger	350x36,5x80	6x10	FZ	HW		**064443**
	Extension cutter	300x28,0x30	6x7	FZ	HW		**064444** ●
	Extension cutter	300x28,0x30	6x7	FZ	HW		**064445** ●
	Extension cutter	350x20,2x80	6x10	FZ	HW		**064446**
	Extension cutter	350x20,2x80	6x10	FZ	HW		**064447**
	Hogging segment	D 300/340	7	FZ	HW		**064970** ●
	Hogging segment	D 300/340	7	FZ	HW		**064971** ●
	Hogging segment	D 350	10	FZ	HW		**064962** ●
	Hogging segment	D 350	10	FZ	HW		**064963** ●
1	Countersink screw, Torx® 20	M6x12				Torx® 20	**006084** ●
2	Screw with ISK	M8x17				for D = 250, 350, 305, 355	**006237** ●
3	Cylindrical screw with ISK	M8x60				for D = 305	**005878** ●
3	Cylindrical screw with ISK	M8x35				for D = 305, 350	**005874** ●
3	Cylindrical screw with ISK	M8x25				for D = 355	**005947** ●

Hogging sawblade
WK 801 2

D mm	SB mm	BO mm	Z	ZF	QAL	ID LH	ID RH
305	4,4	120	60	ES	HW	**061844** ●	**061845** ●
355	4,4	80	72	ES	HW	**061846** ●	**061847** ●







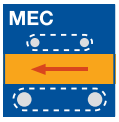





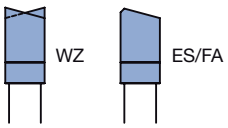

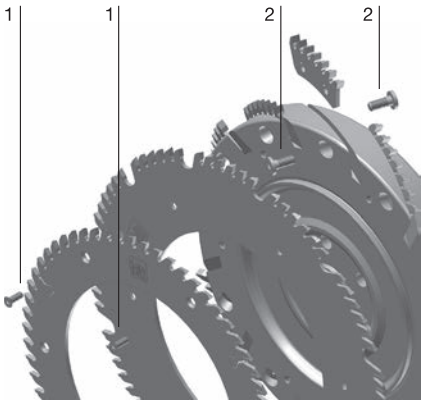

Segment hogger for splitting unit

Application:
For hogging along and across grain with/without scoring sawblade.

Machine:
Sizing station in production lines.

Workpiece material:
Chip and fibre boards (MDF etc.) uncoated, veneered, plastic coated.

Technical information:
Cut edge quality of the trim and finish cuts is defined by the sawblades. Set assembled with finish cut, trim sawblade and twelve tungsten carbide tipped segments. Staggered cut by twelve hogging segment. The hogger is mounted directly on the motor spindle without flanged sleeve.

Hogger for splitting unit
SZ 300 2

Machine	D mm	SB mm	BO mm	Z/ZF$_{Sawblade}$	QAL	ID LH	ID RH
Siempelkamp	350	42,1	30	60 ES/FA 72 WZ	HW	**064704**	**064705**

Spare parts:

Part-no.	BEZ	ABM mm	Z	ZF	QAL	BEM	ID
	Basic hogger	340x34,5x30	12x7	FZ	HW		**064448**
	Basic hogger	340x34,5x30	12x7	FZ	HW		**064449**
	Hogging segment	D 300/340	7	FZ	HW		**064970** ●
	Hogging segment	D 300/340	7	FZ	HW		**064971** ●
1	Countersink screw, Torx® 20	M6x16				Torx® 20	**006086** ●
2	Cylindrical screw with ISK	M8x35				for D = 305, 350	**005874** ●

Hogging sawblade
WK 802 2, WK 850 2

D mm	SB mm	BO mm	Z	ZF	QAL	ID LH	ID RH
300	4,4	200	60	ES/FA	HW	**061848** ●	**061849** ●
350	4,4	200	72	WZ	HW	**061850** ●	**061850** ●

● available ex stock
□ available at short notice
Instruction manual visit www.leitz.org

Problem	Possible cause	Action
Break outs at the edge of the workpiece top edge	– Incorrect height adjustment of hogging motor and tilt in feed direction	Correct setting Check position of tools in feed direction, adjust standard value of 0.1 mm to the panel edge
	– Too much axial play in spindle bearing or damaged bearing	Check motor bearings and tolerances
	– Track vibrates due to low chain tension and damaged guides	Check the chain tension, replace damaged parts
	– Incorrect top pressure adjustment	Check top pressure
	– Run out tolerance too high, possible tool imbalance	Measure tool, correct and check for imbalance
	– Insufficient number of teeth, feed rate too high	Increase number of teeth or adjust feed speed
Break outs at the edge of the workpiece bottom edge	– Workpiece projection too large or thin workpieces	Provide additional support in the tool area
	– Incorrect adjustment in feed direction of scoring or hogging tool	Produce trial sample and adjust motors
	– Scoring sawblade not adjusted to the accuracy required in feed direction or hogging tool tilted too far	Check angles of scoring sawblade and hogging tool in feed direction
Tooth pattern at workpiece edge wavy surface	– Tool position setting angle is too high	Correct the tool setting angle
	– Transport of workpiece not consistent during through feed	Check chain and drive
	– Inconstant workpiece feed rate	Increase number of teeth or adjust feed speed
	– Run out tolerance too high, possible imbalanced tool	Measure tool, correct and check for imbalance
Surface of middle layer rough, uneven (with steps)	– Tool worn, blunt	Repair and service the tool
	– Insufficient number of teeth, feed speed too high	Increase number of teeth, adjust feed speed
	– Adjustment of top and bottom tools (scoring/hogging tool) not level with feed direction	Produce trial sample and adjust motors
	– Adjustment of hogging tool not at correct angle to the track	Check angle with dial gauge on the horizontal moving spindle
	– Incorrect tooth shape of tool and angle geometry	Check and correct
	– Insufficient middle layer quality of the workpiece	Improve by removing resin and sharpening more frequently
Break outs at edge of workpiece end grain, front	– Adjustment of jump head to the hogging tool not level with feed direction	Produce trial sample and adjust motors
Break outs at edge of workpiece end grain, back	– Adjustment of the controlled scoring motor not level with the hogging unit in feed direction	Check movement of the jump scoring motor and correct adjustment to the hogging unit
	– Poor quality of middle layer of workpiece material (large chip flow, poor pressing)	Improve by removing resin and sharpening tools more often
	– Insufficient number of teeth, feed speed too high	Increase number of teeth or adjust feed speed
	– Incorrect tooth shape and angle geometry	Check and adjust through resharpening

Rounding of the cutting edge
When hogging solid wood and wood-derived materials with or without coating, the teeth of the hogging saw-blade and hogger parts are subject to mechanical and chemical wear.

The surface quality determines the size of the cutting edge abrasion. An extremely worn sawblade tooth requires additional sharpening and reduces the number of possible resharpenings.

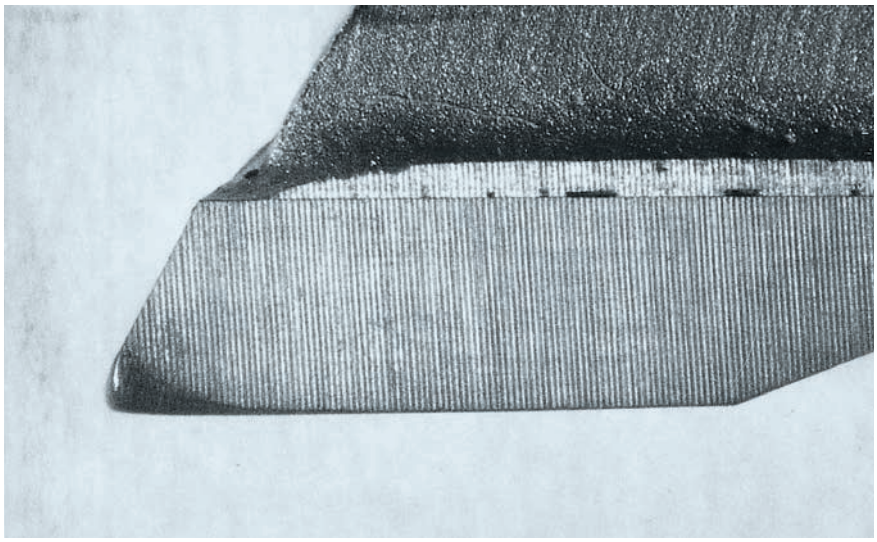

Typical cutting edge wear when machining solid wood.

Cutting edge destruction through improper use
If the relationship between the number of teeth and feed speed is incorrect, the cutting forces will be too high when hogging solid wood, especially with a high moisture content. This leads to choking the gullet and consequently destruction of the saw tooth.

Action:
Reduce the number of teeth to increase the gullet area; adjust feed speed so the cutting quality is still adequate.

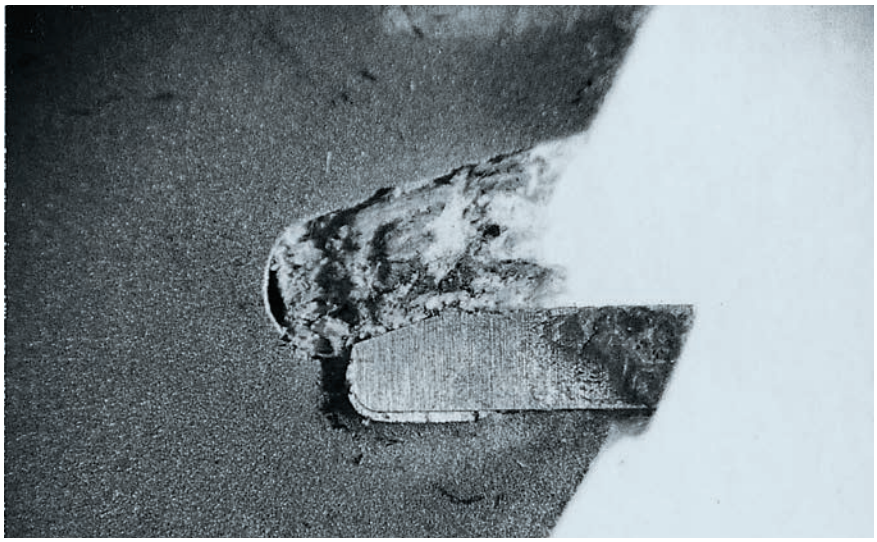

Cutting edge destruction through improper use.

Cutting edge destruction through overstress
If the material to be removed is wider than the cutting width of the hogger, the outside teeth of the raised hogger segments are destroyed by overstress.

The hogging width must always be smaller than the cutting width of the hogging tool.



Destruction of saw tooth through overstress.

Rounding of cutting edges
The illustration opposite shows a typical blunt cutting edge, resulting from mechanical abrasion when machining uniform materials.

Removing the resin from the sides of the teeth between resharpening intervals leads to a considerably longer performance time, as it prevents the loss of side relief.

The area of wear should be approx. 0.2 to max. 0.3 mm.

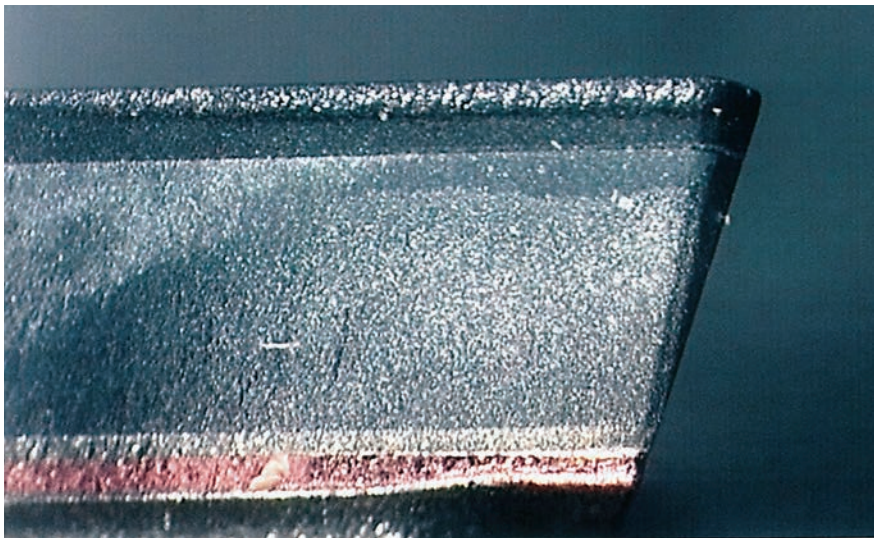

Wear to cutting edges after machining MDF.

Cutting edge rounding and resin build up
Apart from cutting edge wear, a build-up also forms at the side of the teeth from adhesive dust and chip particles (resin build-up) when the workpiece material has a high resin content or the tool has been run for a long time.

This leads to higher cutting forces and power consumption, low surface and middle layer quality and a considerably reduced tool life.

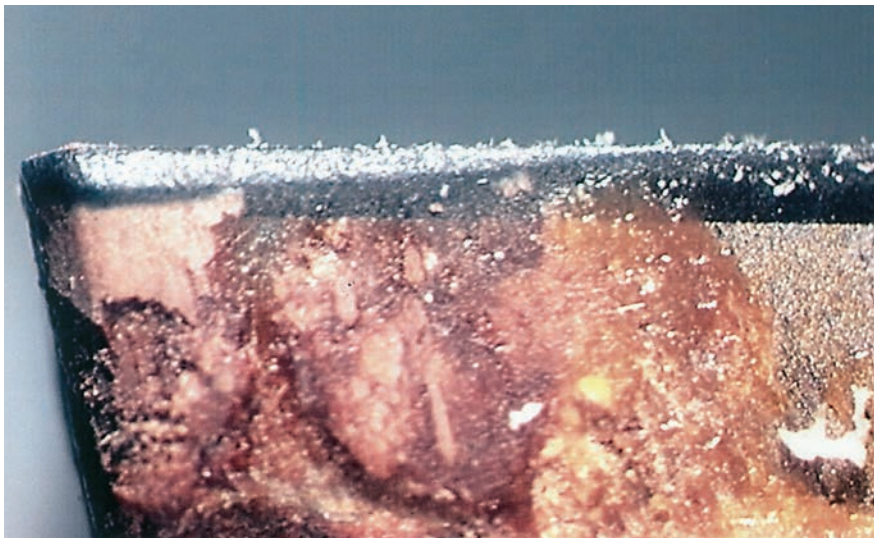

Wear to cutting edges and resin build-up after machining chipboard.

Cutting edge destruction
The cutting edges can be destroyed when machining workpiece materials with a high sand content, a grain size up to 2 - 3 mm diameter (l) or containing metallic particles.

Using DP (DIA) tools when machining such workpiece materials is problematic and use is not recommended for efficient machining.

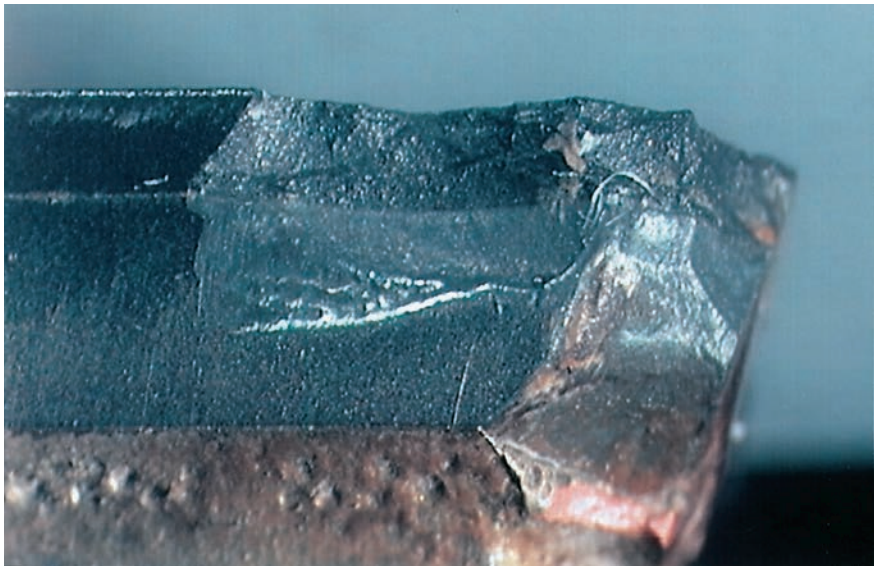

Cutting edge destruction from metallic particles.

Enquiry/order form special tools – panel processing

Customer details: Customer number: (if known) ☐☐☐☐☐☐☐☐

☐ Enquiry
☐ Order

Delivery date: (not binding) ☐☐ CW

Company:

Street:

Post code/place:

Country:

Phone/fax:

Contact person:

Signature:

Date:

Enquiry/order no.:

Tool ID: (if known)

No. of pieces:

Workpiece material:

Type:
Moisture content (of solid wood) %
Direction of machining
☐ along grain ☐ across grain
Cutting quality:
☐ Pre-hogging

Coating: ☐ Yes ☐ No
Type (of wood derived material):
Hogging width: mm
Material thickness: mm

☐ Finish hogging

Machine:

Manufacturer:
Type:
Model:

Power: kW (HP) motor spindle (see drawing):
RPM: min^{-1}
Feed: m min^{-1}

Hogging motor:
☐ Against feed
☐ With feed
☐ Application scoring/hogging
☐ Application hogging/hogging

Tool:

Tool type (see selection):
☐ Hogging set in cutter design
☐ Hogging set with segments
☐ Compact hogging set
☐ Other

Dimensions:
Diameter mm
Cutting width mm
Bore mm

Adaptor:
☐ Mechanical
☐ Quick change
☐ Hydraulic

No. of teeth:
Hogging sawblade
Hogger

Cutting material:
☐ HW (TC)
☐ DP (DIA)

Please state existing data on tool, machine and workpiece material.

Hogging motor/spindle details:

(Enter dimensions on drawing or state in space for sketches)

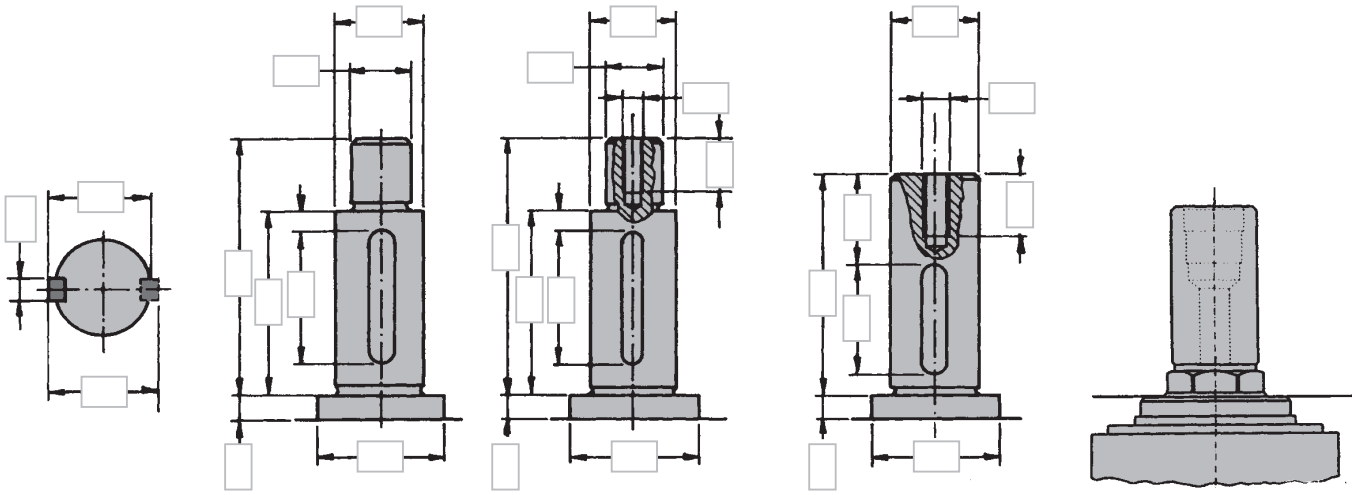

Standard motor

High-precision motor
D40-6 KT (Hydro sleeve)

Sketch for application plan, motor spindle etc.

Key to pictograms


Scoring hogging


Hogging


Double hogging


End trimming


Edge trimming


Grooving, horizontal and vertical

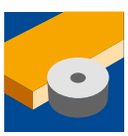
Jointing


Rebating


Profiling


Profiling joints

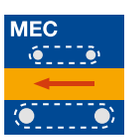

Mechanical feed


Tipped tool



Light alloy body


Interchangeable knives


Mechanical knife clamping, reversible


Resharpenable cutting face


Resharpenable clearance face



Low noise



Optimised chip flow



Tungsten carbide



Polycrystalline diamond (PCD)

www.leitz.org

SDZ/MA 05/2025 Subject to changes prior to technical developments. © Leitz GmbH & Co. KG

Planing and profiling

Leitz Lexicon Edition 7 | Version 2 | 02/2025



Explanation of abbreviations

A	=	dimension A
a_e	=	cutting thickness (radial)
a_p	=	cutting depth (axial)
ABM	=	dimension
APL	=	panel raising length
APT	=	panel raising depth
AL	=	working length
AM	=	number of knives
AS	=	anti sound (low noise design)
b	=	overhang
B	=	width
BDD	=	thickness of shoulder
BEM	=	note
BEZ	=	description
BH	=	tipping height
BO	=	bore diameter
CNC	=	Computerized Numerical Control
d	=	diameter
D	=	cutting circle diameter
D0	=	zero diameter
DA	=	outside Diameter
DB	=	diameter of shoulder
DFC	=	Dust Flow Control (optimised chip clearance)
DGL	=	number of links
DIK	=	thickness
DKN	=	double keyway
DP	=	polycrystalline diamond
DRI	=	rotation
FAB	=	width of rebate
FAT	=	depth of rebate
FAW	=	bevel angle
FLD	=	flange diameter
f_z	=	tooth feed
$f_{z\ eff}$	=	effective tooth feed
GEW	=	thread
GL	=	total length
GS	=	Plunging edge
H	=	height
HC	=	tungsten carbide, coated
HD	=	wood thickness (thickness of workpiece)
HL	=	high-alloyed tool steel
HS	=	high-speed steel (HSS)
HW	=	tungsten carbide (TCT)
ID	=	ident number
IV	=	insulation glazing
KBZ	=	abbreviation
KLH	=	clamping height
KM	=	edge breaker
KN	=	single keyway
KNL	=	combination pinhole consists of 2/7/42 2/9/46,35 2/10/60
L	=	length
l	=	clamping length
LD	=	left hand twist
LEN	=	Leitz standard profiles
LH	=	left hand rotation
M	=	metric thread
MBM	=	minimum order quantity
MC	=	multi-purpose steel, coated
MD	=	thickness of knife
min^{-1}	=	revolutions per minute (RPM)
MK	=	morse taper
m min^{-1}	=	metres per minute
m s^{-1}	=	metres per second
n	=	RPM
$n_{max.}$	=	maximum permissible RPM
NAL	=	position of hub
ND	=	thickness of hub
NH	=	zero height
NL	=	cutting length
NLA	=	pinhole dimensions
NT	=	grooving depth
P	=	profile
POS	=	cutter position
PT	=	profile depth
PG	=	profile group
QAL	=	cutting material quality
R	=	radius
RD	=	right hand twist
RH	=	right hand rotation
RP	=	radius of cutter
S	=	shank dimension
SB	=	cutting width
SET	=	set
SLB	=	slotting width
SLL	=	slotting length
SLT	=	slotting depth
SP	=	tool steel
ST	=	Cobalt-basis cast alloys, e.g. Stellite™
STO	=	shank tolerance
SW	=	cutting angle
TD	=	diameter of tool body
TDI	=	thickness of tool
TG	=	pitch
TK	=	reference diameter
UT	=	cutting edges with irregular pitch
V	=	number of spurs
v_c	=	cutting speed
v_f	=	feed speed
VE	=	packing unit
VSB	=	adjustment range
WSS	=	workpiece material
Z	=	number of teeth
ZA	=	number of fingers
ZF	=	tooth shape (cutting edge shape)
ZL	=	finger length

Notes to the Lexicon concerning the diagrams and tables

The statements made in the diagrams and tables relate to specific conditions and represent parameters from tests subjected to defined conditions. Variations when using tools in individual case due to special application conditions may be possible. Our support team will provide you with detailed information.



3. Planing and profiling



3.1	Surface planing – thicknessing	2
	Enquiry/order form special tools – surface planing – thicknessing	4



3.2	Planing	6
3.2.1	Cutterheads for pre-planing	6
3.2.2	Cutterheads for pre and finish planing	14
3.2.3	Cutterheads for finish planing	21
3.2.4	Combination tools for planing and profiling	32



3.3	Profiling	36
3.3.1	Tools for tongue and groove joints	36
3.3.2	Radius profile cutterheads	40
3.3.3	Cutterheads for multi-purpose profiling	43





3.4	Finger jointing	53
	Enquiry - Checklist for minifinger tools	56
3.4.1	Minifinger joint cutters	57
3.4.2	High performance minifinger cutters	64
3.4.3	Minifinger joint cutterheads	72
3.4.4	Minifinger disc cutters	77
3.4.5	Scoring sawblades and hoggers	79

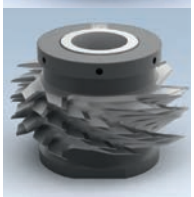



3.5	Grooving, jointing, rebating	83
3.5.1	Rebating cutterheads for multi-purpose processing	83
3.6	Window production	85
Troubleshooting		87
Signs of wear		88
Enquiry/order form special tools – planing and profiling		91
Alphabetical product index		93
ID index		94

Application




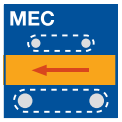

Surface-cutting, thicknessing and width planing of workpieces of any length on surface planing machines and planing machines. The workpieces are first planed to get a reference surface. In the second operation they are planed to thickness (dimension) and possibly jointed to get a right angle as second reference surface.

Workpiece material

Softwood and hardwood, dry and wet, chip and fibreboards (e.g. chipboard, MDF), insulating materials, plastics.

Machines

Surface planing and thicknessing machines.

Mounting of long planerheads

Long planerheads have integrated ball bearings and drive pulleys.

Recommended cutting materials

	HS	Marathon (MC)	HW
Softwood dry	♦	♦	♦
Softwood wet	◇	♦	
Hardwood dry	◇	♦	♦
Hardwood wet	◇	♦	
Plywood		◇	♦
Chipboard			♦
MDF			◇
WPC (Wood-Plastic-Composite)	◇	♦	♦

♦ suitable ◇ partly suitable

Feed speed

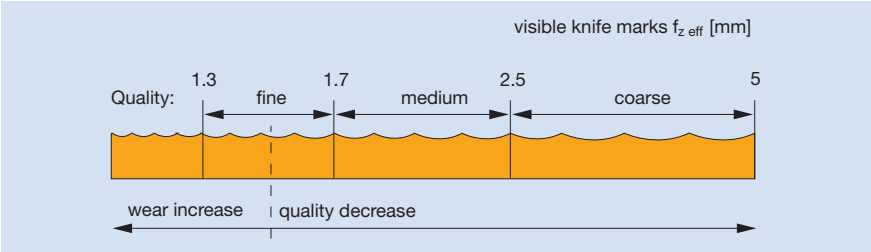

The feed speed is determined by the required surface quality.
Relation between the surface quality and length of knife marks $f_{z\,eff}$.

Diagram to determine the feed speed v_f depending on RPM n and knife marks $f_{z\,eff}$ for different number of teeth Z*

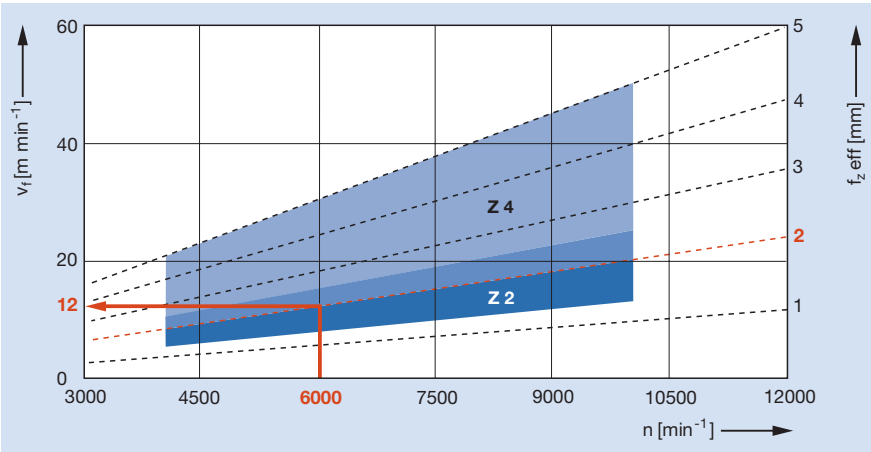

* Even on tools with several wings, only the marks of one knife show on the workpiece surface (one-knife finish).
Z 2 and Z 4 tools produce the same surface quality under identical machining conditions. (see technical information and charts in section User Manual).

Long planerheads, construction type






Technical information	Centrofix Plus - long planerhead made of steel. Turnblade system with formfitting centrifugal clamping. Turnblades with integrated chipbreaker for clean finish also in difficult wood types. Fast, precise knife changes with no adjustment.
Cutting material	HW, HS, MC.
Application	For planing softwood, hardwood, insulating materials, plastics.






Technical information	VariPlan - long planerhead made of steel. Resharpenable and constant diameter turnblade system. Self-positioning and centrifugal force supporting knife clamping for easy handling.
Cutting material	HW, HS.
Application	For planing of softwood, hardwood, insulating material, plastics.




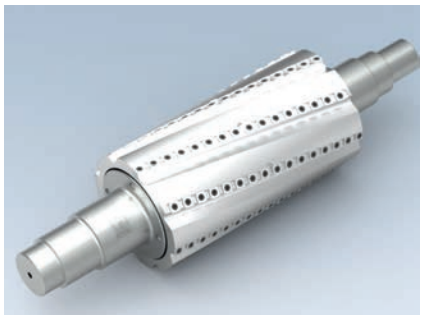

Technical information	HeliPlan/HeliCut - long planerhead made of steel. Turnblades can be turned four times. Low noise and energy efficient through spiral and segmented knife arrangement.
Cutting material	HW.
Application	For planing of softwood and hardwood, insulating material, plastics.

Enquiry/order form special tools – surface planing – thicknessing

Customer details: Customer number: (if known) | ☐ Enquiry ☐ Order | Delivery date: (not binding) | CW

Company:

Street: | Date:

Post code/place: | Enquiry/order no.:

Country: | Tool ID: (if known)

Phone/fax: | No. of pieces:

Contact person:

Signature:

Workpiece material:

Type:

☐ Solid wood: Type:
☐ Wood derived material: Type:
☐ Others Type:

Moisture content: %
Density: g/cm³
Additional information:

Machine:

Manufacturer:
Type:
Model:

Spindle sequence (in feeding direction) e.g. 1 bottom, 2 right hand, 3 left hand, 4 top, 5 multi-purpose.

Motor:	Power:	RPM:	Spindle dimensions:	Add. information:
1	kW (HP)	min^{-1}	mm	
2	kW (HP)	min^{-1}	mm	
3	kW (HP)	min^{-1}	mm	
4	kW (HP)	min^{-1}	mm	
5	kW (HP)	min^{-1}	mm	

Tool:

Tool type (see selection):
Dimension:
Diameter: mm
Cutting width: mm
Bore: mm
No. of teeth:

Cutting material:
☐ HL (HLS)
☐ HS (HSS)
☐ HW (HM)
☐ ST

Direction of rotation:
☐ left hand
☐ right hand

Please state existing data on tool, machine and workpiece material.

Dimensions for long planerheads

(Enter dimensions on drawing or graph)

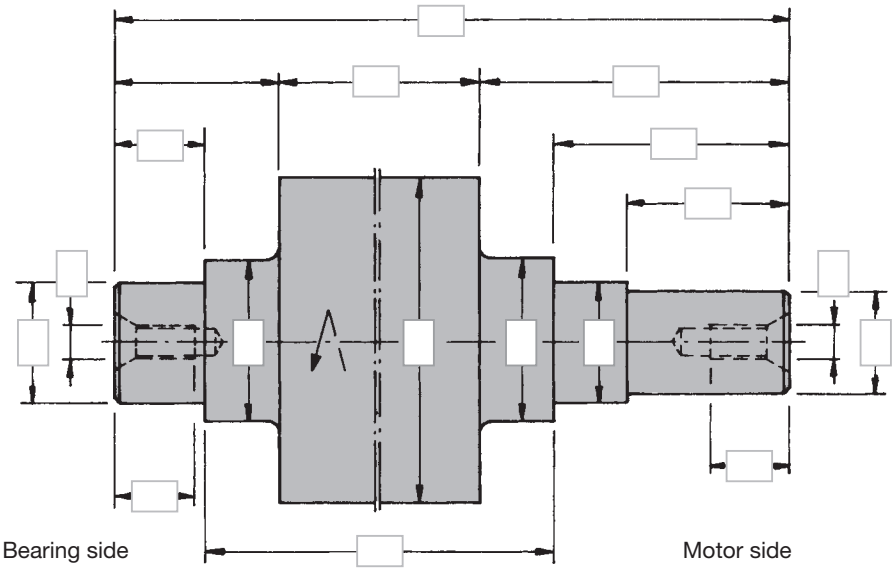

Sketch for application, special motor spindle etc., side of table to workpiece and fence.

Working process

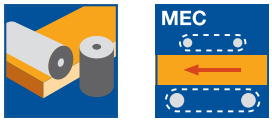

Planing is the first step after cutting the workpiece to size. It prepares workpiece surfaces and machines a datum surface for accurate workpiece processing.
Pre-planing is recommended prior to profiling on four-sided moulders and multi spindle moulding machines.
Pre-planing and reference heads can be combined on the same spindle to guide the timber through the machine.

Workpiece materials

Softwood and hardwood, dry or wet
Chipboard and wood fibre materials (MDF etc.).

Machines

Four-sided moulders and multi spindle moulding machines.

Tool clamping

Mounted directly on the machine spindle, retained by spindle nut.

Recommended cutting material

	HS	Marathon (MC)	HW
Softwood dry	♦	♦	♦
Softwood wet	◇	♦	
Hardwood dry	◇	♦	♦
Hardwood wet	◇	♦	
Plywood		◇	♦
Chipboard			♦
MDF			◇
WPC (Wood-Plastic-Composite)	◇	♦	♦

♦ suitable ◇ partly suitable

Feed speed

The feed speed is determined by the required surface quality.
Relation between the surface quality and length of knife marks $f_{z\ eff}$.

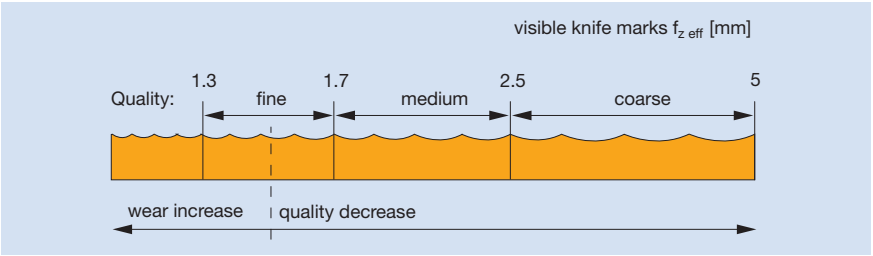

The feed speed is determined according to the quality requirements which can be measured by the produced cuttermarks.
The diagram shows the relation between surface quality and length of knife marks $f_{z\ eff}$.

Planerhead
Z 2 and Z 4

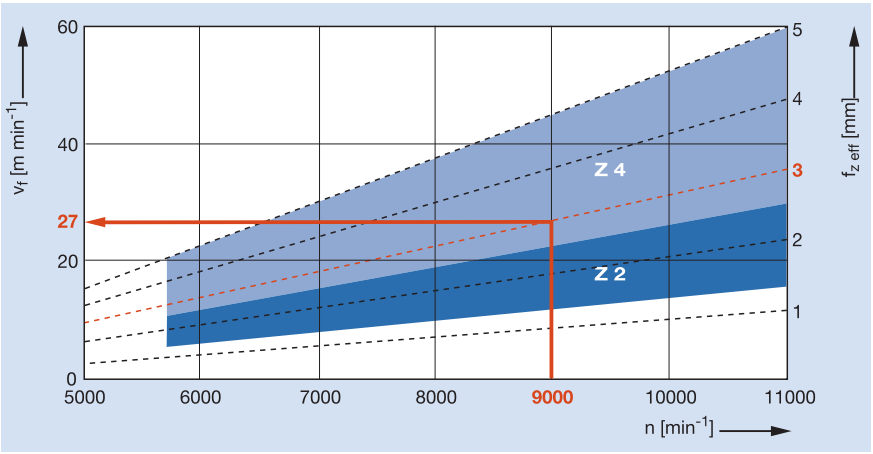

Even on tools with several wings, only the marks of one knife show on the workpiece surface (one-knife finish).
Z 2 and Z 4 tools produce the same surface quality under identical machining conditions (see technical information and charts in section User Manual).

Planerhead HeliPlan





Application	Planing, pre-planing.
Machines	Four-sided moulders and profiling machines or machines with HSK 85 WS interface.
Workpiece material	Softwood and hardwood.
No. of teeth/tool life	2/2 staggered, each HW turnblade knife has 4 lives.
Cutting material	HW.
Chip removal	Softwood: up to 15.0 mm. Hardwood: up to 10.0 mm.
Tool design	Aluminium or steel tool body with spiral, staggered single cutting edges, mounted on the tool body periphery.
Technical features	HW turnblade knives with 4 curved cutting edges.

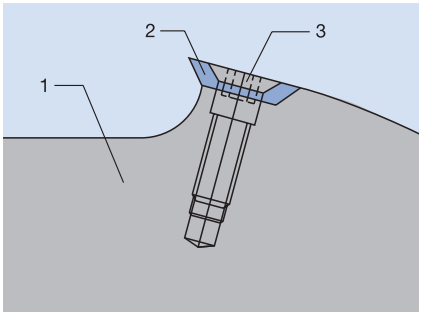

1) Tool body of steel or aluminium
2) Knives
3) Clamping screw

Special advantages	– Minimum breakout. – Noise reduction (up to 10 dB(A)). – The staggered cut reduces both the cutting force and feed pressure. – Turnblade knives have four cutting edges (four lives).
Note	– Barely visible marks in the overlap area; minimal waviness. – As HeliPlan has a staggered cut of individual cutting edges, the tool has limited suitability for producing finished surfaces. Finish planing or profiling may be necessary depending on the quality requirement. – Tool body surface hardening advisable for abrasive workpiece materials. – Use in combination with reference cutterhead WW 410 2 (see page 11) on the first bottom spindle of moulding machines.

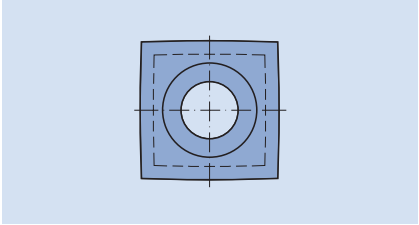

HW turnblade knife with 4 cutting edges.





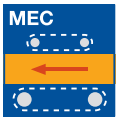







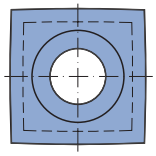

HW turnblade knife

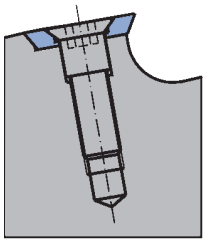

Knives mounted on periphery

Planerhead HeliPlan with 4 edge HW turnblade knives

Application:
Pre-planing, surfacing and jointing all types of wood with large chip removal. Also suitable for finish planing if quality demands are less important or in combination with subsequent sanding.

Machine:
Four-sided moulders.

Workpiece material:
Softwood and hardwood.

Technical information:
Pre-planing cutterhead with 4 edge HW turnblade knives. Low noise and energy efficient due to spiral, segmented edge arrangement. Smooth finish by radiused cutting edges. Aluminium tool body. Optional with steel reference cutterhead for machines with fence.

Aluminium tool body, with bore
WW 220 2 01

D mm	SB mm	ND mm	BO mm	Z	AM PCS	n_{max} min^{-1}	ID
125	130	136	40	2/2	22	12000	**030423** ●
125	166	172	40	2/2	28	12000	**030467** ●
125	210	216	40	2/2	36	12000	**030452**
125	236	242	40	2/2	40	12000	**030466** ●
125	256	262	40	2/2	44	12000	**030470** ●
140	166	172	50	2/2	28	12000	**030468**
140	236	242	50	2/2	40	12000	**030469**

Design with HW cutting edges.
Further dimensions and inch dimensions available on request.
Suitable reference cutterheads on page 11.

Spare knives:

BEZ	ABM mm	QAL	VE PCS	ID
Turnblade knife	15x15x2,5	HW	10	**009535** ●
Turnblade knife	15x15x2,5	TDC		**602901** ●

Spare parts:

BEZ	ABM mm	ID
Countersink screw, Torx® 20	M5x14.2-8.8	**007394** ●
Torx® key	Torx® 20	**006091** ●

● available ex stock
□ available at short notice
Instruction manual visit www.leitz.org




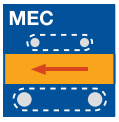






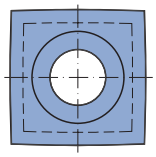

HW turnblade knife

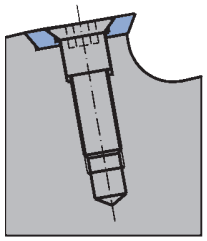

Knives mounted on periphery

Planerhead HeliPlan with 4 edge HW turnblade knives

Application:
Pre-planing, surfacing and jointing all types of wood with large chip removal. Also suitable for finish planing if quality demands are less important or in combination with subsequent sanding.

Machine:
Four-sided moulders with HSK 85 WS interfaces.

Workpiece material:
Softwood and hardwood.

Technical information:
Pre-planing cutterhead with 4 edge HW turnblade knives. Low noise and energy efficient due to spiral, segmented edge arrangement. Smooth finish through radiused cutting edges. Aluminium tool body. Tool and HSK are shrink-fit together. Optional steel reference cutterhead for machines with fence.

Aluminium tool body, with HSK 85 WS
WL 210 2 02

D mm	SB mm	A mm	Z	AM STK	n_{max} min^{-1}	ID bottom	ID top
125	130	26	2/2	22	12000	**132000** □	**132001** □
125	166	26	2/2	28	12000	**132022** □	**132023** □
125	210	26	2/2	36	12000	**132008**	**132009**
125	236	26	2/2	40	12000	**132024** □	**132025** □
125	270	26	2/2	46	8000	**132012**	**132013**
125	310	26	2/2	54	8000	**132014** ●	**132015** ●

Aluminium tool body, HSK 85 WS with reference cutterhead
WL 403 2 02

D mm	SB mm	A mm	Z	V	AM PCS	n_{max} min^{-1}	DRI	ID
125	236	26	2/2	2	40	12000	bottom	**132066** □
125	310	26	2/2	2	54	8000	bottom	**132065** □

Design with HW cutting edges.
Further dimensions and inch dimensions available on request.

Spare knives:

BEZ	ABM mm	QAL	VE PCS	ID
Turnblade knife	15x15x2,5	HW	10	**009535** ●
Turnblade knife	15x15x2,5	TDC		**602901** ●

Spare parts:

BEZ	ABM mm	ID
Countersink screw, Torx® 20	M5x14.2-8.8	**007394** ●
Torx® key	Torx® 20	**006091** ●

● available ex stock
□ available at short notice
Instruction manual visit www.leitz.org

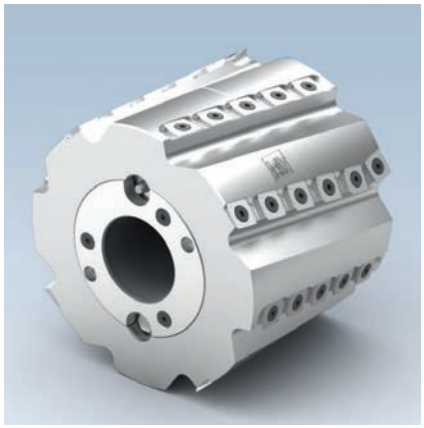

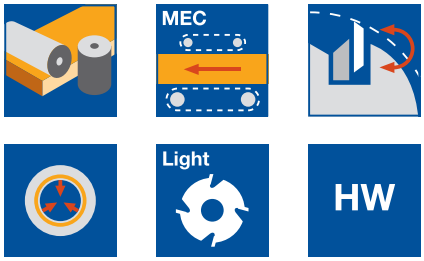

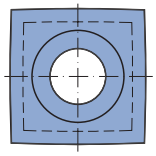

HW turnblade knife

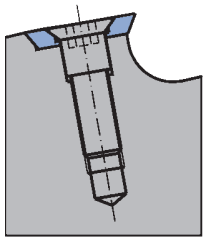

Knives mounted on periphery

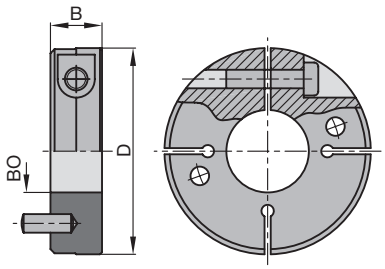

Clamping collar without thread

Hydro Planerhead HeliPlan

Application:
Pre-planing, surface cutting of all types of wood with large chip removal. Finish cutting of gluable surfaces and workpieces with secondary quality demands.

Machine:
Four-sided moulders and profile machines.

Workpiece material:
Softwood and hardwood.

Technical information:
Pre-planing cutterhead with 4-time HW turnblades. Low noise and energy efficient through spiral, segmented edge arrangement. Plane surfaces through radiused cutting edges. Tool bodies of lightweight aluminium with integrated hydro clamping system. Activated by a grease gun.

Aluminium tool body
HW 230-2

D mm	SB mm	BO mm	Z	n_{max} min^{-1}	ID
160	150	50	4/4	11000	**132200**
160	180	50	4/4	11000	**132201**
160	200	50	4/4	11000	**132202**
160	230	50	4/4	11000	**132203**
160	310	50	4/4	11000	**132204**
200	150	50	6/6	8000	**132205**
200	180	50	6/6	8000	**132206**
200	200	50	6/6	8000	**132207**
200	230	50	6/6	8000	**132208**
200	310	50	6/6	8000	**132209**
250	150	50	8/8	6900	**132210**
250	180	50	8/8	6900	**132211**
250	200	50	8/8	6900	**132212**
250	230	50	8/8	6900	**132213**
250	310	50	8/8	6900	**132214**

Design in steel/lightweight aluminium on request. This version combines the advantages of a light weight tool and a wear resistant knife seating and gullet area.

Spare knives:

BEZ	ABM mm	QAL	VE PCS	ID
Turnblade knife	15x15x2,5	HW	10	**009535** ●
Turnblade knife	15x15x2,5	TDC		**602901** ●

Spare parts:

BEZ	ABM mm	ID
Countersink screw, Torx® 20	M5x14.2-8.8	**007394** ●
Torx® key	Torx® 20	**006091** ●

Clamping collars without thread
TD 870 0

D mm	B mm	BO mm	ID
100	25	40	**030700** ●
100	25	50	**030702** ●

● available ex stock
□ available at short notice
Instruction manual visit www.leitz.org





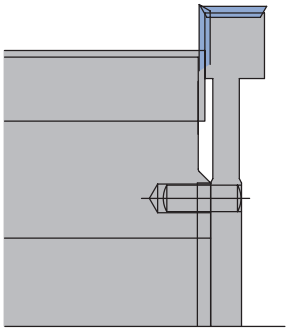

Combination with wedge-type system, build up system and CentroStar.
For planerheads without boss, mounted with spacers.

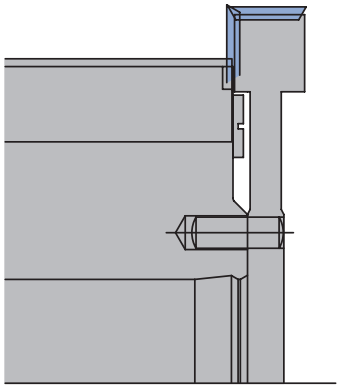

Combination with HeliPlan and VariPlan Plus cutterhead. Mounting without spacer.

Reference cutterhead

Application:
For cutting a side reference rebate when surface planing on the first bottom spindle in combination with a planer cutterhead.

Machine:
Four-sided moulders with fence.

Workpiece material:
Softwood and hardwood.

Technical information:
Steel tool body with HW turnblade knives, can be combined with pre-planing and finish planing cutterheads on the first bottom spindle.
D 145 for planerheads D 125.
D 160 for planerheads D 140.

For wedge-type system, build-up system, CentroStar
WW 410 2

D mm	SB mm	BO mm	Z	V	QAL	n_{max} min^{-1}	ID
145	15	40	2	2	HW	12000	**132077** ●
160	15	50	2	2	HW	11000	**132078** ●

For HeliPlan, VariPlan Plus
WW 410 2

D mm	SB mm	BO mm	Z	V	QAL	n_{max} min^{-1}	ID
145	15	40	2	2	HW	12000	**132075** ●
160	15	50	2	2	HW	11000	**132076** ●

Spare knives:

BEZ	ABM mm	QAL	VE PCS	ID
Turnblade knife	15x15x2,5	HW	10	**009535** ●

Spare parts:

BEZ	ABM mm	ID
Spacer	70x3x40,DTK58	**028617** ●
Countersink screw, Torx® 20	M5x14.2-8.8	**007394** ●
Pin	6x20	**008617** ●





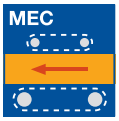



HW

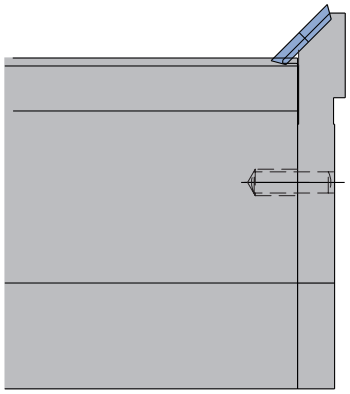

Combination with VariPlan, HeliPlan, CentroStar

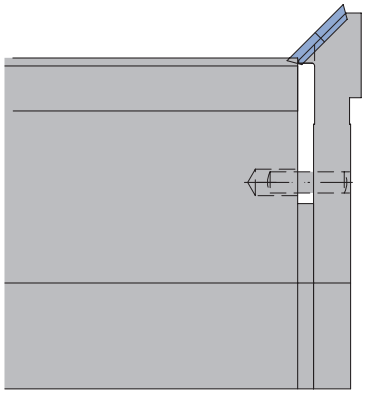

Combination with planerhead wedge-type system and Weinig CentroLock

Bevel cutterhead

Application:
Bevelling (45°) of wood in combination with planing cutterheads on a spindle.

Machine:
Four-sided moulders and profiling machines.

Workpiece material:
Softwood and hardwood.

Technical information:
Steel tool body with HW turnblade knives. Can be combined with pre-planing and finish planing cutterheads with Ø 125 mm. For the combination with planing cutterheads with wedge-type system and Winig CentroLock planing cutterheads the spacer ID **28617** is necessary.

Bevel cutterhead for combination with HeliPlan, VariPlan, CentroStar, wedge-type system
WW 300 2

D mm	SB mm	BO mm	Z	ID LH	ID RH
145	10,6	40	4	**132090** ●	**132091** ●

Bevel cutterhead for combination with CentroLock
WW 300 2

D mm	SB mm	BO mm	Z	ID LH	ID RH
145	10,6	40	4	**132092** □	**132093** □

Planing cutterheads with HSK 85 WS interface and bevel cutterheads are available at short notice on request.

Spare knives:

BEZ	ABM mm	QAL	VE PCS	ID
Turnblade knife	15x15x2,5	HW	10	**009535** ●

Spare parts:

BEZ	ABM mm	ID
Spacer	70x3x40,DTK58	**028617** ●

● available ex stock
□ available at short notice
Instruction manual visit www.leitz.org

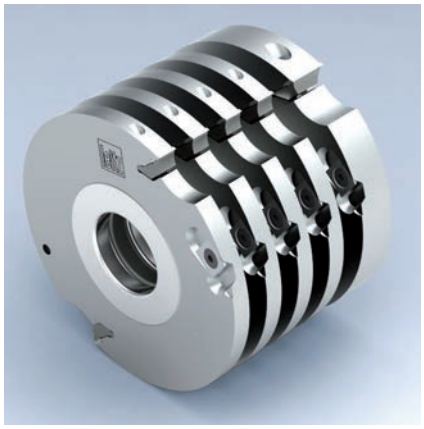



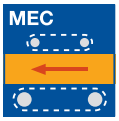





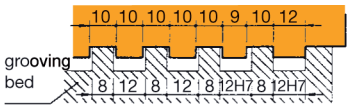

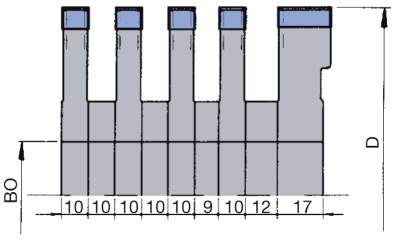

Number of tools for different widths

SB mm	working width mm				
	80	100	120	140	170
SB 20	1	1	1	1	1
SB 10	3	4	5	6	8

Cutterhead for groove bed guide

Application:
For guide grooves on the first bottom spindle for precise feeding of short parts or curved workpieces.

Machine:
Four-sided moulders with groove beds.

Workpiece material:
Softwood and hardwood, along grain.

Technical information:
Build up turnblade knife tool system, diameter and cutting width constant. The closed, round design of the tool body reduces the noise level.

HW turnblade design
WW 101 2, WW 102 2

D mm	SB mm	BO mm	BO_{max} mm	Z	V	n_{max} min^{-1}	ID
125	20	40	50	2	2	13700	**125729** ●
125	10	40	50	2	2	13700	**020390** ●
140	20	40	50	2	2	12200	**125730** ●
140	10	40	50	2	2	12200	**020388** ●

Spare knives:

BEZ	ABM mm	QAL	VE PCS	ID
Turnblade knife Marathon	19,7x8x1,5	HW-30F MC	10	**601604** ●
Turnblade knife	9,7x8x1,5	HW-30F	10	**005197** ●
Turnblade spur VS1	14x14x2	HW-F	10	**005099** ●

Spare parts:

BEZ	ABM mm	ID
Spacer	60x0,1x40	**027941** ●
Spacer	60x0,3x40	**027942** ●
Spacer	60x9x40	**028449** ●
Spacer	60x10x40	**027951** ●
Clamping wedge	18x18,75x8,27	**630204** ●
Clamping wedge	9x18,75x8,27	**009764** ●
Clamping screw w. disc, Torx® 20	M5x18.5	**007446** ●
Allen screw with shank, Torx® 15	M5x20	**007380** ●
Countersink screw, Torx® 20	M6x0.5x4.9	**006243** ●
Torx® key	Torx® 15	**117507** ●
Torx® key	Torx® 20	**117503** ●
Setting gauge for knives	0,3/0,8	**005374** ●

Planing cutterhead VariPlan Plus









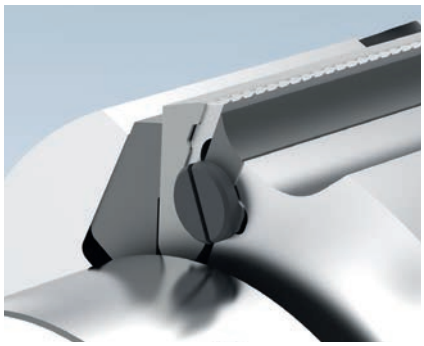

Application	Pre and finish planing of all types of wood.
Machines	Four-sided and multi spindle moulders, also with HSK 85 WS interface.
Workpiece material	Softwood and hardwood, plastics (limited suitable).
Number of knives	Z 2 to Z 12 depending on the feed speed and the tool diameter.
Resharpening area	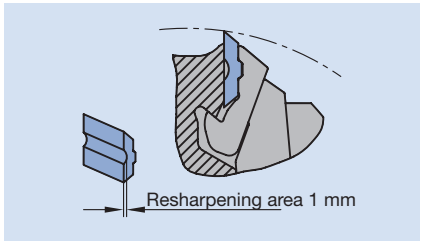 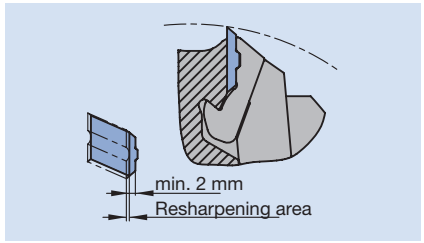
Cutting material	HS for softwood. HW for hardwood, mixed use of softwood and hardwood or laminated wood with glued joint.
Chip removal	Pre-planing: Softwood up to 10 mm, hardwood up to 8 mm. Finish planing up to 1.0 mm.
Tool design	Resharpenable and constant diameter tool system with turnblade planer knives. Aluminium body, wear resistant steel chip breaker. Centrifugal force assisted, self-centering knife clamping system.
Technical characteristics	Operational safety through full form knife clamping. Fast knife change through self-positioning knife clamping. Knife clamping in the dust-protected area. One sharpening operation, therefore 2 extra tool lives by turnblade knife. VariPlan Plus basic body for 3 knife variants: Microfinish, RipTec and Integral turnblade knives. VariPlan Plus Planerheads for machines with HSK 85 WS interface are mounted on HSK 85 WS arbor. Combination with pre surfacing/rebating cutterhead possible.

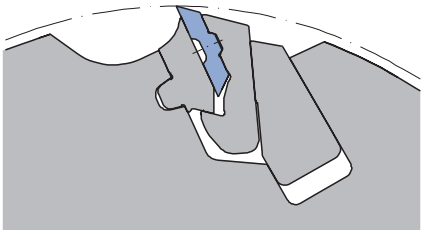

Aluminium tool body with steel chip breaker.





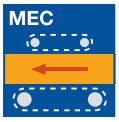





Planerhead CentroPlan Integral

Application:
For pre-planing on machines with two processing spindles. For pre- and finish planing on one processing spindle.

Machine:
Four-side planing and profiling moulders.

Workpiece material:
Softwood and hardwood with knots and fibre structure difficult to machine.

Technical information:
Centrifugal-supported and form-fitting knife clamping system with turnblades. Light metal tool body. Tool with two CentroPlan ripple knives and two straight CentroPlan planing knives. Unequally pitched cutting arrangement for optimum chip formation.

Planerhead with borehole
WW 240 2 37

D mm	SB mm	ND mm	BO mm	QAL	Z	n_{max} min^{-1}	ID
125	130	136	40	HW	2+2	12000	**134700** ●
125	166	172	40	HW	2+2	12000	**134701** ●
125	236	242	40	HW	2+2	12000	**134702** ●

Planerhead with HSK 85 WS
WP 240 2 37

D mm	SB mm	QAL	Z	n_{max} min^{-1}	ID LH	ID RH
125	130	HW	2+2	12000	**134750** □	**134751** □
125	166	HW	2+2	12000	**134752** □	**134753** □
125	236	HW	2+2	12000	**134754** □	**134755** □

Planerhead with HSK 85 WS with reference cutterhead
WP 240 2 39

D mm	SB mm	QAL	Z	n_{max} min^{-1}	DRI	ID
125	236	HW	2+2	12000	LH	**134790** □

Spare knives:

BEZ	SB mm	H mm	DIK mm	QAL	SET PCS	ID
Turnblade knife set CentroPlan	130	13	2,6	HW	2	**617606** ●
Turnblade knife set CentroPlan	166	13	2,6	HW	2	**617671** ●
Turnblade knife set CentroPlan	236	13	2,6	HW	2	**617669** ●
Turnblade knife set CentroPlan - RipTec	130	13	2,6	HW	2	**617706** ●
Turnblade knife set CentroPlan - RipTec	166	13	2,6	HW	2	**617771** ●
Turnblade knife set CentroPlan - RipTec	236	13	2,6	HW	2	**617769** ●

● available ex stock
□ available at short notice
Instruction manual visit www.leitz.org





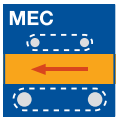





Planerhead CentroPlan

Application:
For pre-planing and finish planing.

Machine:
Four-side planing and profiling moulders.

Workpiece material:
Softwood and hardwood.

Technical information:
Centrifugal-supported and form-fitting knife clamping system with turnblades. Axial or radial knife removal. Light metal tool body.

Planerhead with borehole
WW 240 2 36

D mm	SB mm	ND mm	BO mm	QAL	Z	n_{max} min^{-1}	ID
125	130	136	40	HW	2	12000	**130750** ●
125	150	126	40	HW	2	12000	**130753**
125	166	172	40	HW	2	12000	**130751** ●
125	180	186	40	HW	2	12000	**130754**
125	210	216	40	HW	2	12000	**130755** ●
125	236	242	40	HW	2	12000	**130752** ●
125	270	276	40	HW	2	12000	**130756**
125	130	136	40	HW	4	12000	**130700** ●
125	150	156	40	HW	4	12000	**130703**
125	166	172	40	HW	4	12000	**130701** ●
125	180	186	40	HW	4	12000	**130704**
125	210	216	40	HW	4	12000	**130705**
125	236	242	40	HW	4	12000	**130702** ●
125	270	276	40	HW	4	12000	**130706**

Planerhead with HSK 85 WS
WP 240 2 36

D mm	SB mm	QAL	Z	n_{max} min^{-1}	ID LH / bottom	ID RH / top
125	130	HW	2	12000	**130850** □	**130851** □
125	150	HW	2	12000	**130856**	**130857**
125	166	HW	2	12000	**130852** □	**130853** □
125	180	HW	2	12000	**130858**	**130859**
125	210	HW	2	12000	**130860** □	**130861** □
125	236	HW	2	12000	**130854** □	**130855** □
125	270	HW	2	12000	**130862**	**130863**
125	310	HW	2	12000	**130864**	**130865**
125	130	HW	4	12000	**130800** □	**130801** □
125	150	HW	4	12000	**130806**	**130807**
125	166	HW	4	12000	**130802** □	**130803** □
125	180	HW	4	12000	**130808**	**130809**
125	210	HW	4	12000	**130810**	**130811**
125	236	HW	4	12000	**130804** □	**130805** □
125	270	HW	4	12000	**130812**	**130813**
125	310	HW	4	12000	**130814**	**130815**

Planerhead with HSK 85 WS with reference cutterhead
WP 240 2 36

D mm	SB mm	QAL	Z	n_{max} min^{-1}	DRI	ID
125	236	HW	2	12000	LH / bottom	**130890** □
125	236	HW	4	12000	LH / bottom	**130840** □

● available ex stock
□ available at short notice
Instruction manual visit www.leitz.org

Spare knives:

SB mm	H mm	DIK mm	QAL	SET PCS	ID
130	13	2,6	HW	2	**617606** ●
150	13	2,6	HW	2	**617607** ●
166	13	2,6	HW	2	**617671** ●
180	13	2,6	HW	2	**617612** ●
210	13	2,6	HW	2	**617615** ●
236	13	2,6	HW	2	**617669** ●
270	13	2,6	HW	2	**617665** ●
310	13	2,6	HW	2	**617662** ●

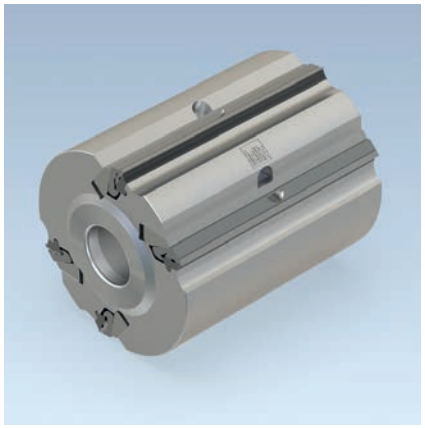



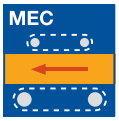









Planerhead VariPlan Plus Integral

Application:
Versatile application as planing tool:
For roughing and finishing on a processing spindle.

Machine:
Four-side moulders and multi-spindle planing machines.

Workpiece material:
Softwood and hardwood with knots and fibre structure difficult to machine.

Technical information:
Tool with 2 VariPlan ripple knives and 2 straight VariPlan planer knives (constant diameter and resharpenable). Unequally pitched cutting arrangement for optimum chip formation. Light metal tool body. For chip removal > 1 mm.

Planerhead with borehole
WW 240 2 09

D mm	SB mm	ND mm	BO mm	BO_{max} mm	QAL	n_{max} min^{-1}	Z	ID
125	130	136	40		HW	12000	2+2	**131712** ●
125	166	172	40		HW	12000	2+2	**131713** ●
125	236	242	40		HW	12000	2+2	**131714** ●
140	130	136	40	50	HW	10500	2+2	**131715**
140	166	172	40	50	HW	10500	2+2	**131716**
140	236	242	40	50	HW	10500	2+2	**131717**

Planerhead with HSK 85 WS
WP 240 2 09

D mm	SB mm	QAL	n_{max} min^{-1}	Z	ID LH	ID RH
125	130	HW	12000	2+2	**131806** □	**131807** □
125	166	HW	12000	2+2	**131808** □	**131809** □
125	236	HW	12000	2+2	**131810** □	**131811** □

Special production tools with deviating cutting widths are not possible!

Spare knives:

BEZ	SB mm	H mm	DIK mm	SET PCS	QAL	ID
Turnblade knife set - VariPlan (ripple)	130	16	3,7	2	HW-MF	**617506** ●
Turnblade knife set - VariPlan (ripple)	166	16	3,7	2	HW-MF	**617571** ●
Turnblade knife set - VariPlan (ripple)	236	16	3,7	2	HW-MF	**617569** ●
Turnblade knife set - VariPlan	130	16	3,7	2	HW-MF	**617106** ●
Turnblade knife set - VariPlan	166	16	3,7	2	HW-MF	**617171** ●
Turnblade knife set - VariPlan	236	16	3,7	2	HW-MF	**617169** ●

● available ex stock
□ available at short notice
Instruction manual visit www.leitz.org





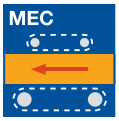









Planerhead VariPlan Plus

Application:
Multi-purpose planing tool:
For pre-planing with RipTec turnblades.
For finish planing with microfinish turnblades.

Machine:
Four-sided moulders and multi spindle planing machines.

Workpiece material:
Softwood and hardwood, thermoplastics (partly suitable).

Technical information:
Resharpenable and constant diameter planerhead system.
Self-positioning and centrifugal force supported knife clamping. Lightweight aluminium tool body. Resharpening the knives on the cutting face means one sharpening operation gives two additional lives.

Lightweight aluminium tool body
WW 240 2 05

D mm	SB mm	ND mm	BO mm	n_{max} min^{-1}	Z	ID HS	ID HW-MF
125	130	136	40	12000	2	**134250** □	**134200** ●
125	150	156	40	12000	2	**134251**	**134201**
125	166	172	40	12000	2	**134252** □	**134202** ●
125	180	186	40	12000	2	**134253**	**134203**
125	210	216	40	12000	2	**134254**	**134204**
125	236	242	40	12000	2	**134255** □	**134205** ●
125	256	262	40	12000	2	**134258**	**134208**
125	270	276	40	10500	2	**134256**	**134206**
125	130	136	40	12000	4	**134450** □	**134400** ●
125	150	156	40	12000	4	**134451**	**134401**
125	166	172	40	12000	4	**134452** □	**134402** ●
125	180	186	40	12000	4	**134453**	**134403**
125	210	216	40	12000	4	**134454**	**134404**
125	236	242	40	12000	4	**134455** □	**134405** ●
125	256	262	40	12000	4	**134458**	**134408** ●
125	270	276	40	10500	4	**134456**	**134406**

Further dimensions and inch dimensions on request.
Spare knives (HS/HW-MF/HW-RipTec) see section Knives and Spare Parts.

Spare knives:

SB mm	H mm	DIK mm	SET STK	ID HS	ID HW-MF
130	16	3,7	2	**610506** ●	**617106** ●
150	16	3,7	2	**610509** ●	**617109** ●
166	16	3,7	2	**610571** □	**617171** ●
180	16	3,7	2	**610512** ●	**617112** ●
210	16	3,7	2	**610515** ●	**617115** ●
236	16	3,7	2	**610569** □	**617169** ●
256	16	3,7	2	**610572** □	**617172** ●
270	16	3,7	2		**617165** ●

● available ex stock
□ available at short notice
Instruction manual visit www.leitz.org





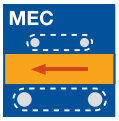









Planerhead VariPlan Plus

Application:
Multi-purpose planing tool:
For pre-planing with RipTec turnblades.
For finish planing with microfinish turnblades.

Machine:
Four-sided moulders and multi spindle moulders with HSK 85 WS interfaces.

Workpiece material:
Softwood and hardwood, thermoplastics (partly suitable).

Technical information:
Resharpenable and constant diameter planerhead system. Self-positioning and centrifugal force supported knife clamping. Lightweight aluminium tool body. Resharpening the knives on the cutting face means one sharpening operation gives two additional lives. Tool body and HSK arbor are shrunk fit together.

Lightweight aluminium tool body on HSK 85 WS
WP 240 2 05

D mm	SB mm	A mm	n_{max} min^{-1}	Z	QAL	ID LH / bottom	ID RH / top
125	130	26	12000	2	HW-MF	**134500** □	**134501** □
125	150	26	12000	2	HW-MF	**134502**	**134503**
125	166	26	12000	2	HW-MF	**134504** □	**134505** □
125	180	26	12000	2	HW-MF	**134506**	**134507**
125	210	26	12000	2	HW-MF	**134508**	**134509**
125	236	26	12000	2	HW-MF	**134510** □	**134511** □
125	270	26	8000	2	HW-MF	**134512**	**134513**
125	310	26	8000	2	HW-MF	**134514**	**134515**
125	130	26	12000	4	HW-MF	**134600** □	**134601** □
125	150	26	12000	4	HW-MF	**134602**	**134603**
125	166	26	12000	4	HW-MF	**134604** □	**134605** □
125	180	26	12000	4	HW-MF	**134606**	**134607**
125	210	26	12000	4	HW-MF	**134608**	**134609**
125	236	26	12000	4	HW-MF	**134610** □	**134611** □
125	270	26	8000	4	HW-MF	**134612**	**134613**
125	310	26	8000	4	HW-MF	**134614**	**134615**

Further dimensions and inch dimensions on request.
Spare knives (HS/HW-MF/HW-RipTec) see section Knives and Spare Parts.

Spare knives:

SB mm	H mm	DIK mm	SET STK	ID HS	ID HW-MF
130	16	3,7	2	**610506** ●	**617106** ●
150	16	3,7	2	**610509** ●	**617109** ●
166	16	3,7	2	**610571** □	**617171** ●
180	16	3,7	2	**610512** ●	**617112** ●
210	16	3,7	2	**610515** ●	**617115** ●
236	16	3,7	2	**610569** □	**617169** ●
270	16	3,7	2		**617165** ●
310	16	3,7	2	**610522** ●	**617122** ●





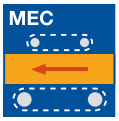









Planerhead VariPlan Plus

Application:
Multi-purpose planing tool:
For pre-planing with RipTec turnblades.
For finish planing with microfinish turnblades.

Machine:
Four-sided moulders and multi spindle moulders with HSK 85 WS interfaces.

Workpiece material:
Softwood and hardwood, thermoplastics (partly suitable).

Technical information:
Resharpenable and constant diameter planerhead system. Self-positioning and centrifugal force supported knife clamping. Lightweight aluminium tool body. Resharpening the knives on the cutting face means one sharpening operation gives two additional lives. Tool body and HSK arbor are shrunk fit together.

Lightweight aluminium tool body on HSK 85 WS with reference cutterhead Z2 / V2
WP 240 2 08

D mm	SB mm	A mm	n_{max} min^{-1}	Z	QAL	DRI	ID
125	236	26	12000	2	HW-MF	LH / bottom	**134581** □
125	236	26	12000	4	HW-MF	LH / bottom	**134681** □

Further dimensions and inch dimensions on request.
Spare knives (HS/HW-MF/HW-RipTec) see section Knives and Spare Parts.

Spare knives:

SB mm	H mm	DIK mm	SET STK	ID HS	ID HW-MF
236	16	3,7	2	**610569** □	**617169** ●

● available ex stock
□ available at short notice
Instruction manual visit www.leitz.org

Application



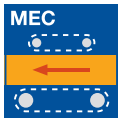

Finish planing is the last production step on four-sided moulders. The recommended finish planing cutting depth is 0.5-0.8 mm. For good results, a tear-out free pre-planed surface is required.

Workpiece material

Softwood and hardwood.
Chipboard and fibre materials (MDF etc.).

Machines

Four-sided moulders with or without jointing.

Tool clamping

Direct on the machine spindle with spindle clamping nut, with hydro clamping element or with HSK interface.

Recommended cutting

	HS	Marathon (MC)	HW
Softwood dry	♦	♦	◇
Softwood wet		♦	♦
Plywood		◇	♦
Chipboard			♦
MDF			♦
WPC (Wood-Plastic-Composite)	◇	♦	♦

♦ suitable ◇ partly suitable

Feed speed

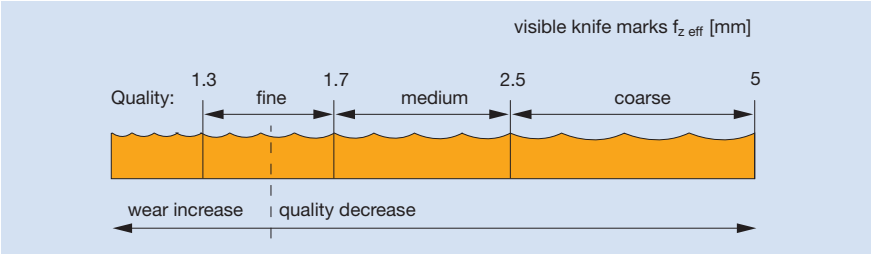

The selection of the feed speed is determined by the required surface quality. See diagram for the relationship between surface quality and length of knife marks $f_{z\ eff}$.

Diagram to determine feed speed v_f depending on RPM n and length of knife marks $f_{z\ eff}$ for different number of wings.

Diagram:
Planing cutterhead
Z 2 and Z 4

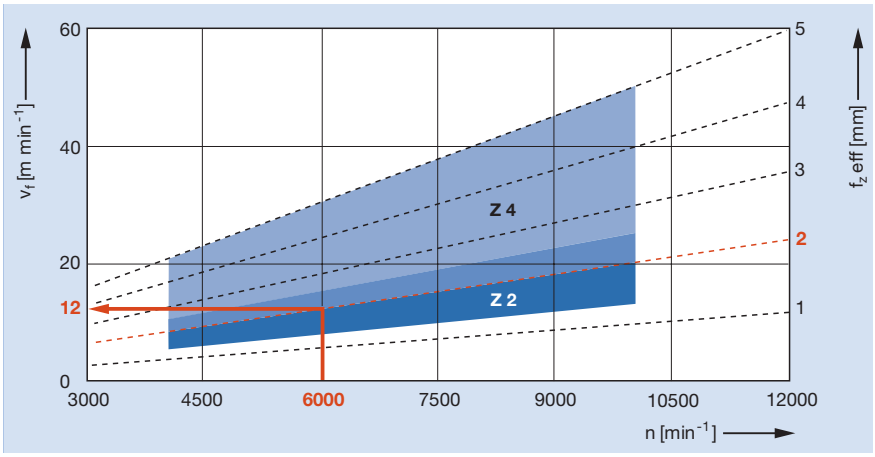

Even on tools with several wings, only the marks of one knife show on the workpiece surface (one-knife finish).
Z 2 and Z 4 tools produce the same surface quality under identical machining conditions (see technical information and charts in section User Manual).

Length of cutter marks for jointed hydro planing cutterheads

Diagram:
Hydro planerhead
Z 4
Z 6
Z 10

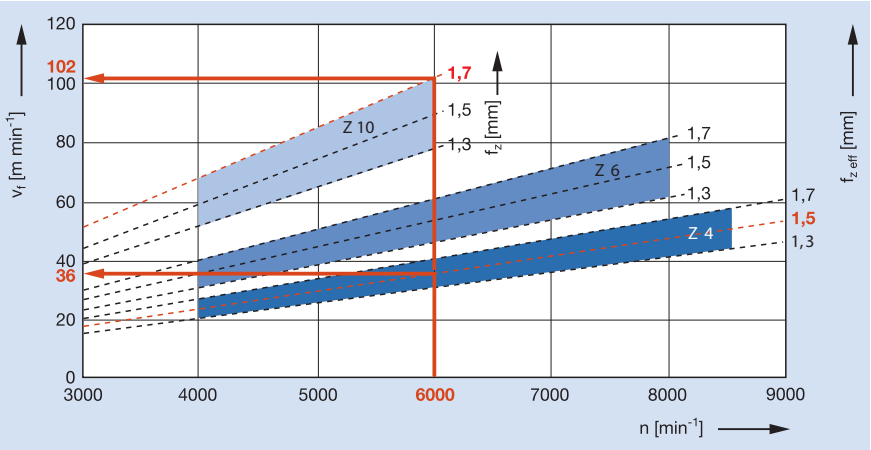

The marks of all knives show on the workpiece in regular pitches on jointed hydro tools. More wings means high feed speeds maintaining the same surface quality (see technical information and charts in section User Manual).

Wedge type system





Application	Planing, pre-planing and finish planing.
Machines	Four-sided moulders.
Workpiece material	Softwood and hardwood.
Features of knives	Knife thickness: 3 mm, knife height: 30 mm. Resharpening area: 10 mm.
Cutting material	HS, HW and Marathon (MC).
Chip removal	Softwood: up to 15.0 mm. Hardwood: up to 10.0 mm.
Tool design	Aluminium alloy cutterhead with resharpenable planer knives (SB x 30 x 3 mm). Used on four-sided moulders for pre-planing and finish planing.
Technical information	Cutterhead with compression spring for knife positioning with setting gauge.
Note	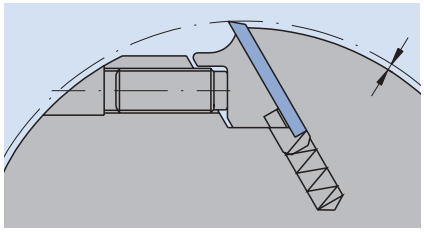 Correct knife projection: maximum 2 mm. – Knives resharpened in the cutterhead for improved run out accuracy and better planing quality. – After resharpening, check the minimum knife clamping height marked on the tool body. – Always tighten the screws from the middle to the outside; setting torque 17 Nm – Check the knife projection (see picture above). Position the planing knife with key and setting gauge. – Mounting the reference head requires two additional holes D 7 mm on a pitch circle diameter of 58 mm and a spacer 3 mm (ID **028617**).

Serrated back planerhead with HSK 85 WS interface





Application	Pre and finish planing.
Machines	Planing machines with HSK 85 WS interface.
Workpiece material	Softwood and hardwood, dry and wet.
Number of wings	Z 2, Z 4, Z 6
Cutting material	Marathon (MC), tungsten carbide HW.
Chip removal	Softwood: up to 12 mm. Hardwood: up to 10 mm.
Feed type	Mechanical feed.
Tool design 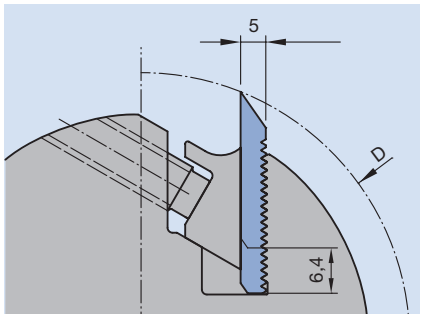	Monobloc steel tool body. High concentricity and balance quality. Seating for 60° serrated back planer knives H = 40 mm x 5.0 mm thickness with standard tooth pitch 1.6 mm.
Resharpening area	9 mm.
Advantages	Pre and finish planing with Marathon planer knives resharpened to one cutting circle. For finish planing with n = 12000 min^{-1} and a feed rate > 18 m min^{-1}, the planer knives require jointing on the machine. After jointing, all knives will have the same cutting circle.
Note	Cutting angle 20° for softwood. Cutting angle 12° for hardwood and wood fibre materials. Jointing with n = 10000 min^{-1}.

Hydro planerhead







Application	Surfacing, pre-planing and finish planing for feeds from 24 to 120 m min^{-1}.
Machines	Multi spindle moulders, with jointing if required.
Workpiece material	Softwood and hardwood.
Number of wings	Z 4 to Z 12 depending on the diameter.
Cutting material	HS, HW and Marathon (MC 33).
Chip removal	Pre-planing: up to 5.0 mm. Finish planing: up to 0.8 mm.
Tool design	Steel cutterhead with hydraulic clamping, open hydro clamping system with resharpenable planer knives resharpened in the cutterhead for concentricity < 0.005 mm.
Technical features	Jointed knives for excellent surfaces at high feed speeds. Maximum joint bevel width: for softwood 0.5 mm, for hardwood 0.7 mm. High running accuracy and low vibration from hydro clamping. High feed speeds depend on the number of wings and RPM (see page 24, Diagram to determine feed speed).

Note

- Hydro clamp only on spindle.
- Clamp to spindle with clamping collar.
- For knives 30 x 3 mm (35 x 3 from diam. 203 on) HS, HW and MC.

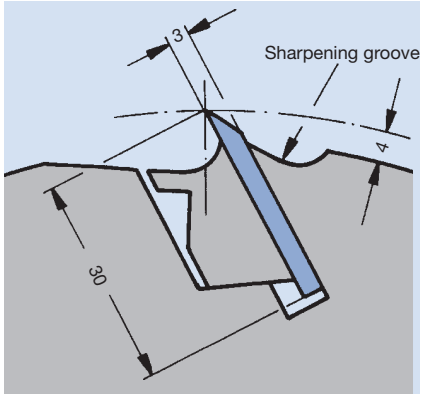

Sharpening groove on the body behind knife for easy knife resharpening in the cutterhead on sharpening machines.

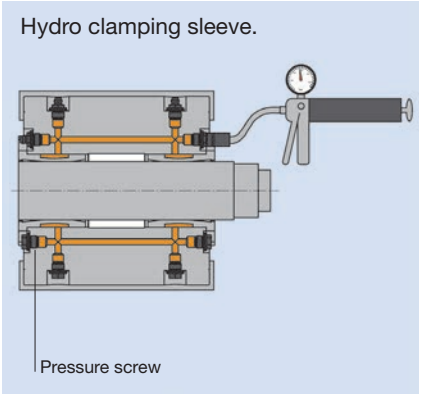

Illustration of hydro clamping system.

TurboPlan Plus hydro planerhead







Application	Pre-planing and precision finish planing feed from between 160 to 360 m min^{-1}.
Machines	High performance moulders with precision spindles and counter bearing.
Workpiece material	Softwood and hardwood.
Diameter/ Number of wings	D 200 to D 360. Z 4 to Z 32.
Cutting material	Marathon (MC 33).
Chip removal	Pre-planing: 5.0 mm. Finish planing: 0.8 mm.
Resharpening area	10.0 mm.
Tool design	Hydro planerhead with steel body. Open hydro clamping system. Integrated balancing segments, attached to body. Form fitting knife clamping: Resharpenable knives with serrated back in Leitz Marathon design. Central knife clamping by open hydro system.
Technical features	For Leitz serrated back Marathon knives HS 30 x 5.0 mm. High concentricity and low vibration from hydro clamping system. Knives resharpened in automatic resharpening machines have a concentricity < 0.005 mm.
Tool clamping	Hydro clamping system.
Knife clamping	Form fitting design, hydro clamping.
Note  scheme 4	Jointed knives give an excellent finish at high feed speeds. Do not pressurise the hydro clamping system without mounting the tool on the spindle. Working pressure 350-450 bar – check daily. Spindle safety – use locking collars to reduce the risk of the tool spinning and cold welding on the spindle. For Leitz serrated back knives Marathon (MC) 30 x 5 mm.

Hydro planerheads – TurboPlan Plus

Diagram to determine feed speed v_f of jointed hydro planerheads depending on RPM n and knife marks $f_{z\,eff}$ different number of wings Z*

Diagram:
Hydro planerhead
RotaPlan and TurboPlan

Z 12
Z 16
Z 20
Z 26
Z 32

The feed speed is determined by the required surface quality (length of knife marks $f_{z\,eff}$) and depends on the RPM and the number of wings in the cutterhead. The relation can be found in the diagram below.

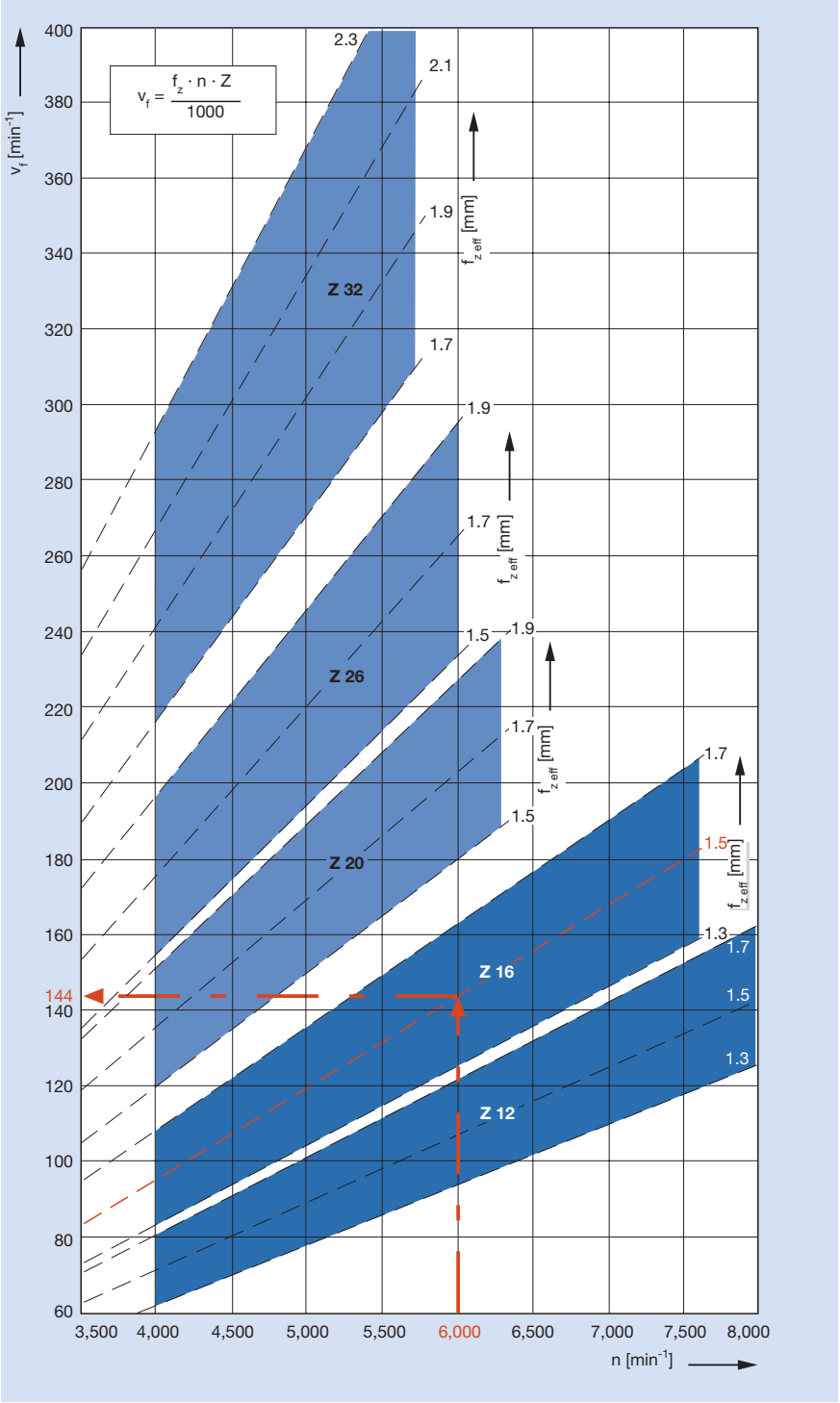

With jointed hydro tools the marks of all knives are shown on the workpiece in regular pitches. More wings mean higher feed speeds maintaining the same surface quality.





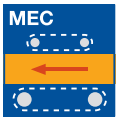







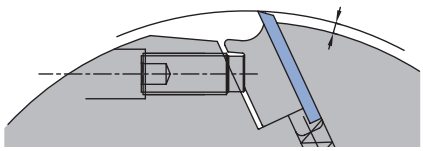

Correct protrusion: max. 2 mm

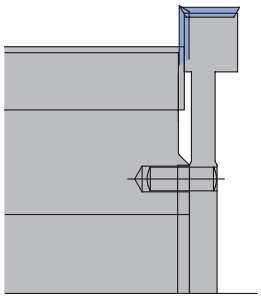

Combined with reference cutterhead

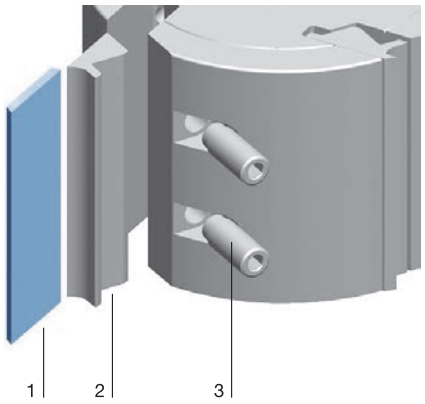

Planerhead wedge-type system

Application:
Multi-purpose suitable for pre-planing with large chip removal and for finish planing.

Machine:
Four-sided moulders and profile machines.

Workpiece material:
Softwood and hardwood.

Technical information:
Cutterhead with resharpenable planer knives SB x 30 x 3.0 mm. Pressure springs position the knives by a setting gauge on the defined cutting edge circle. Cutting material quality HS, Marathon (MC33) and HW available.

Aluminium tool body, coated
WM 200 2 07

D mm	SB mm	BO mm	n_{max} min^{-1}	Z	ID HS	ID HW
125	100	40	10500	4	**140408** ●	**140458** □
125	130	40	10500	4	**140409** ●	**140459** □
125	150	40	10500	4	**140410**	**140460**
125	170	40	10500	4	**140411** ●	**140461** □
125	180	40	10500	4	**140412**	**140462**
125	210	40	10500	4	**140413**	**140463**
125	230	40	10500	4	**140414**	**140464**
125	240	40	10500	4	**140415** ●	**140465** □

Suitable reference cutterhead on page 11.

Spare knives:

Teile-Nr.	SB mm	H mm	DIK mm	ID HS Classic	ID HS Premium	ID HW	ID MC33
1	100	30	3	**605002** ●	**027103** ●	**027279** ●	**606702** ●
1	130	30	3	**605005** ●	**027106** ●	**027282** ●	**606705** ●
1	150	30	3	**605006** ●	**027107** ●	**027283** ●	**606706** ●
1	170	30	3	**605007** ●	**027108** ●	**027284** ●	**606707** ●
1	180	30	3	**605008** ●	**027109** ●	**027285** ●	**606708** ●
1	210	30	3	**605010**	**027110** ●	**027286** ●	**606710** ●
1	230	30	3	**605011** ●	**027111** ●	**027287** ●	**606711** ●
1	240	30	3	**605012** ●	**027134** ●	**027323** ●	**606712** ●

Spare knives in further dimensions and qualities see section Knives and Spare Parts.

Spare parts:

Part-no.	BEZ	ABM mm	for SB mm	ID
2	Clamping wedge		100	**620900** ●
2	Clamping wedge		130	**620901** ●
2	Clamping wedge		150	**620902** ●
2	Clamping wedge		170	**620903** ●
2	Clamping wedge		180	**620904** ●
2	Clamping wedge		210	**620905** ●
2	Clamping wedge		230	**620906** ●
2	Clamping wedge		240	**620907** ●
3	Allen screw	M10x1x25		**007395** ●
	Allen key	SW 5		**117509** ●
	Pressure spring	27x6x0,75		**008076** ●
	Setting gauge	D125/140		**005361** ●

● available ex stock
□ available at short notice
Instruction manual visit www.leitz.org





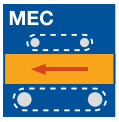







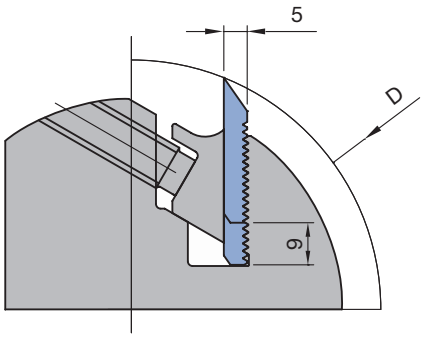

Planerhead with HSK 85 WS and serrated back HS Marathon planer knives

Application:
Finish planing.

Machine:
Four-sided moulders with HSK 85 WS interface.

Workpiece material:
Cutting angle 20° for softwood and hardwood in general.
Cutting angle 12° for materials likely to splinter such as oak, Douglas fir, merbau and wood fibre materials, e.g. MDF.

Technical information:
Finish planing cutterhead in mono block design DTK 90 mm with serrated back planer knives SB x 40 x 5 mm ground to cutting circle. Jointable by specific jointing stone. Steel tool body. High balance quality by assembly with parts of the same weight.

Cutting angle 20°
WP 210 2 01

D mm	SB mm	A mm	QAL	Z	n_{max} min^{-1}	ID LH / bottom	ID RH / top
106	130	26	MC33	2	12000	**140322** ●	**140323** ●
106	170	26	MC33	2	12000	**140324**	**140325**
106	240	26	MC33	2	12000	**140326** ●	**140327** ●
106	80	26	MC33	4	12000	**140330** ●	**140331** ●
106	130	26	MC33	4	12000	**140332** ●	**140333** ●
106	170	26	MC33	4	12000	**140334** ●	**140335** ●
106	240	26	MC33	4	12000	**140336** ●	**140337** ●
128	80	26	MC33	6	10000	**140346** ●	**140347** ●
128	130	26	MC33	6	10000	**140348** ●	**140349** ●
128	170	26	MC33	6	10000	**140350** ●	**140351** ●
128	240	26	MC33	6	8000	**140352** ●	**140353** ●

Cutting angle 12°
WP 210 2 01

D mm	SB mm	A mm	QAL	Z	n_{max} min^{-1}	ID LH / bottom	ID RH / top
106	130	26	MC33	2	12000	**140302** ●	**140303** ●
106	170	26	MC33	2	12000	**140304**	**140305**
106	240	26	MC33	2	12000	**140306**	**140307**
106	130	26	MC33	4	12000	**140312**	**140313**
106	170	26	MC33	4	12000	**140314**	**140315**
128	80	26	MC33	6	10000	**140340**	**140341**
128	130	26	MC33	6	10000	**140342**	**140343**
128	170	26	MC33	6	10000	**140344**	**140345**

Spare knives:

SB mm	H mm	DIK mm	QAL	VE PCS	ID
80	40	5	MC33	2	**697302** ●
130	40	5	MC33	2	**697304** ●
170	40	5	MC33	2	**697306** ●
240	40	5	MC33	2	**697311** ●

Spare parts:

BEZ	ABM mm	for SB mm	ID
Clamping wedge	78x25,3x10,8	80	**620702** ●
Clamping wedge	128x25,3x10,8	130	**620705** ●
Clamping wedge	168x25,3x10,8	170	**620707** □
Clamping wedge	238x25,3x10,8	240	**620710** □
Allen screw	M10x1x20		**007396** ●
Allen key	SW 5		**117509** ●

● available ex stock
□ available at short notice
Instruction manual visit www.leitz.org



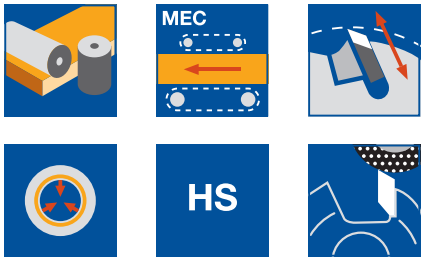

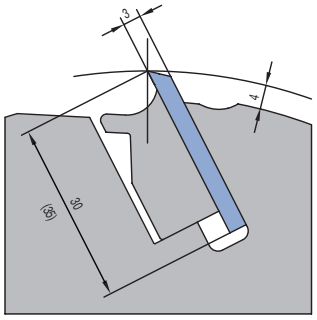

Mounted knife

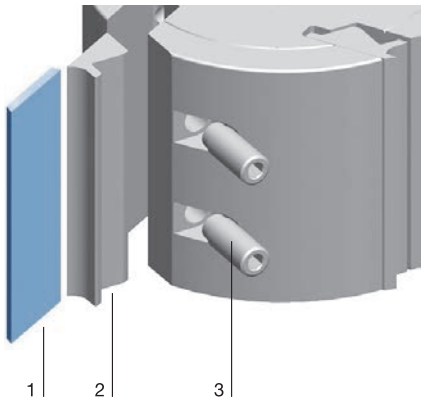

Hydro planerhead

Application:
Pre and finish planing with high feed speeds.

Machine:
Four-sided moulders and profile machines with jointing equipment.

Workpiece material:
Softwood and hardwood.

Technical information:
Steel tool body with corrosion resistant surface protection. Integrated hydro clamping system with exchangeable clamping sleeves. Activated by a grease gun. Inclusive resharpenable HS planer knives (SB x 30 x 3 mm). From diameter 203 mm, knives with 35 mm height also can be used. Hydro planerheads can only be used in combination with a clamping collar.

Steel tool body
HM 200 2 07

D mm	SB mm	BO mm	Z	QAL	n_{max} min^{-1}	ID
163	130	50	4	HS	8100	**142050**
163	160	50	4	HS	8100	**142051**
163	230	50	4	HS	8100	**142052**
163	60	50	6	HS	8100	**142053** ●
163	100	50	6	HS	8100	**142054** ●
163	130	50	6	HS	8100	**142055** ●
163	160	50	6	HS	8100	**142056** ●
163	230	50	6	HS	8100	**142057** ●
163	60	50	8	HS	8100	**142058**
163	100	50	8	HS	8100	**142059**
163	130	50	8	HS	8100	**142060**
163	160	50	8	HS	8100	**142061**
163	180	50	8	HS	8100	**142062**
163	230	50	8	HS	8100	**142063**
203	100	50	12	HS	6600	**142064**
203	130	50	12	HS	6600	**142065**
203	160	50	12	HS	6600	**142066**
203	180	50	12	HS	6600	**142067**
203	230	50	12	HS	6600	**142068**

Lightweight aluminium version on request.

Spare knives:

Teile-Nr.	SB mm	H mm	DIK mm	ID HS Classic	ID HS Premium	ID HW	ID MC33
1	60	30	3	**605000**	**027101** ●	**027277** ●	**606700** ●
1	100	30	3	**605002** ●	**027103** ●	**027279** ●	**606702** ●
1	130	30	3	**605005** ●	**027106** ●	**027282** ●	**606705** ●
1	160	30	3	**605045** ●	**027163** ●		**606745** ●
1	180	30	3	**605008** ●	**027109** ●	**027285** ●	**606708** ●
1	230	30	3	**605011** ●	**027111** ●	**027287** ●	**606711** ●

Spare parts:

Part-no.	BEZ	ABM mm	for SB mm	ID
2	Clamping wedge		60	**620950** ●
2	Clamping wedge		100	**620951** ●
2	Clamping wedge		130	**620952** ●
2	Clamping wedge		160	**620953** ●
2	Clamping wedge		180	**620954** ●
2	Clamping wedge		230	**620955** ●
3	Allen screw	M10x1x25		**007395** ●
3	Allen screw	M10x1x20		**007396** ●
3	Allen screw	M10x1x16		**007397** ●
	Grease nipple	M10x1		**007935** ●
	Relief plug	M10x1		**007983** ●
	Allen key	SW 5		**117509** ●
	Grease gun			**008239** ●

● available ex stock
□ available at short notice
Instruction manual visit www.leitz.org



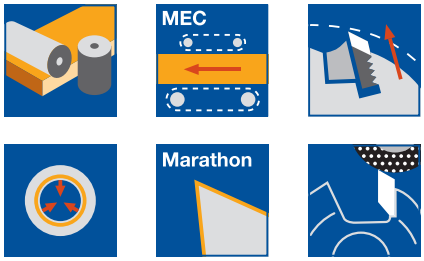

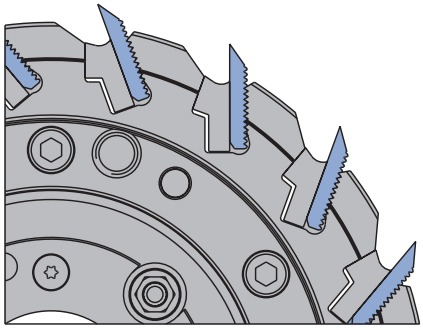

TurboPlan PLUS knife clamping

Hydro planerhead TurboPlan PLUS

Application:
Pre and finish planing with high feed speeds.

Machine:
High performance planing machines with precision spindles and counter bearing as well as a jointing unit.

Workpiece material:
Softwood and hardwood.

Technical information:
Tool body in weight optimized design with two independent hydro systems for the tool and knife clamping. Activated by a grease gun. Marathon coated planer knives with back serration (SB x 30 x 5 mm). Hydro planerhead can only be used in combination with a clamping collar.

Weight optimised design
HM 200 2 08

D mm	SB mm	BO mm	Z	n_{max} min^{-1}	ID
200	150	50	14	8000	**142230**
200	230	50	14	8000	**142231**
200	330	50	14	8000	**142232**
225	150	50	18	7200	**142233**
225	230	50	18	7200	**142234**
225	330	50	18	7200	**142235**
260	150	50	22	6200	**142236**
260	230	50	22	6200	**142237**
260	330	50	22	6200	**142238**

Spare knives:

SB mm	H mm	DIK mm	QAL	ID
150	30	5	MC33	**697359** □
230	30	5	MC33	**697360** □
330	30	5	MC33	**697363** □

Spare parts:

BEZ	ABM mm	BEM	ID
Knife setting device	for TurboPlan		**142290**
Setting gauge for Hydro planerhead	Knife protrusion 3.8 mm		**142291**
Grease gun			**008239** ●
Grease cartridge	for Hydro sleeve		**007934** ●
Jointing stone (round)	12x32	Colour: grey	**008237** ●
Jointing stone (angular)	20x15x60	Colour: brown	**008238** ●

● available ex stock
□ available at short notice
Instruction manual visit www.leitz.org

Planerhead VariPlan Plus/ ProFix F







Application	Four-sided moulders for planing, grooving or profiling in one process step. The combination of planing knives and profiling knives allows the planerhead to be used as a multi-purpose planing and profiling tool.
Machines	Four-sided moulders.
Workpiece material	Softwood and hardwood.
Cutting material	Planing knives HS / HW. Profile knives HW.
Number of wings	Z 2+2 seatings for radius, bevel, grooving or profile knives.
Resharpening area	Planer knife 1.0 mm, profile knife 4.5 mm
Chip removal	Softwood: up to 10.0 mm. Hardwood: up to 7.0 mm.
Tool design	Lightweight aluminium cutterhead with resharpenable turnblade planing knives. Clamping system with constant profile and constant diameter (see introduction VariPlan Plus and ProFix cutterhead).
Technical features	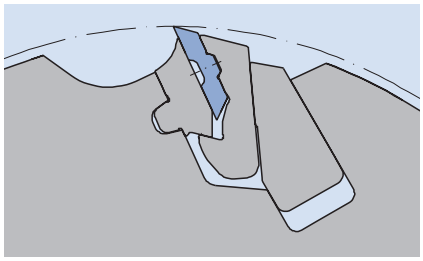 Axially adjustable profile knives can be adjusted to the corresponding wood width/height. Profile depths up to 25 mm and working widths up to 120 mm possible. Cutterhead with lightweight aluminium tool body and steel chip breaker.
Accessories	Bevel, grooving, fluting knives; two left and two right knives per set. 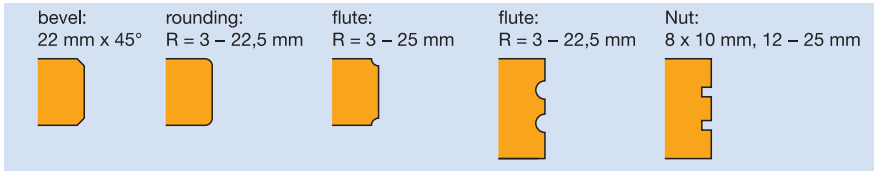
Note	– Quick change of VariPlan Plus knives in radial direction. – Quick change and adjustment of ProFix profile knives in axial direction. – Special profile knives on request.





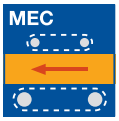





Planerhead CentroPlan / ProFix

Application:
For planing and profiling e.g. grooving, bevelling, rounding or profiling in common.

Machine:
Four-side planing and profiling moulders.

Workpiece material:
Softwood and hardwood.

Technical information:
Centrifugal-supported and form-fitting knife clamping system with turnblades. Axial or radial knife removal. Light metal tool body. With knife seatings for ProFix F profile knives (PT max. 25 mm, SB max. 100 mm).

Planerhead with borehole
WW 240 2 38

D mm	SB mm	ND mm	BO mm	QAL	Z	n_{max} min^{-1}	ID
125	130	136	40	HW	2+2	10200	**134800** ●
125	166	172	40	HW	2+2	10200	**134801** ●
125	236	242	40	HW	2+2	10200	**134802** ●

Planerhead with HSK 85 WS
WP 240 2 38

D mm	SB mm	QAL	Z	n_{max} min^{-1}	ID LH	ID RH
125	130	HW	2+2	10200	**134850** □	**134851** □
125	166	HW	2+2	10200	**134852** □	**134853** □
125	236	HW	2+2	10200	**134854** □	**134855** □

Spare knives:

BEZ	SB mm	ABM mm	QAL	ID LH	ID RH
ProFix F knife PF 25 R=3	20	R=3	HW	**011041** ●	**011042** ●
ProFix F knife PF 25 R=5	20	R=5	HW	**011043** ●	**011044** ●
ProFix F knife PF 25 R=10	20	R=10	HW	**011047** ●	**011048** ●
ProFix F knife PF 25 Bevel 45°	20	Bevel 45°	HW	**011051** ●	**011052** ●





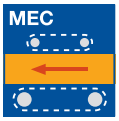









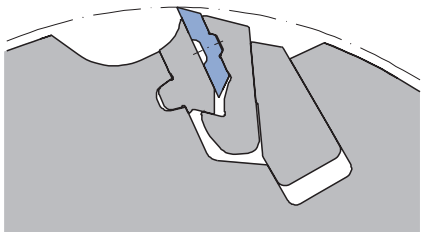

Lightweight aluminium tool body with steel chip breaker

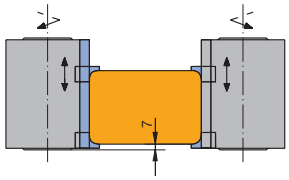

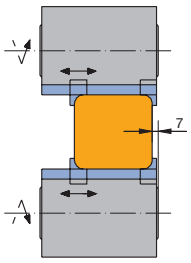

Use on vertical or horizontal spindles
HD = SB - 40 mm

Planerhead VariPlan Plus / ProFix F system PF 25

Application:
For planing and profiling (chamfering) e.g. grooving, bevelling, rounding or profiling in common.

Machine:
Four-sided moulders.

Workpiece material:
Softwood and hardwood.

Technical information:
Resharpenable cutterhead system with constant diameter and constant profile. VariPlan Plus planerhead with knife seatings for ProFix F profile knives (PF 25) and HW microfinish turnblade knives. Profile knives: PT_{max} 25 mm, SB_{max} 100 mm. Lightweight aluminium tool body.

Bore 40 mm
WW 240 2 07

D mm	SB mm	ND mm	BO mm	QAL	n_{max} min^{-1}	Z	ID
125	130	136	40	HW	10200	2+2	**131060** ●
125	166	172	40	HW	10200	2+2	**131058** ●
125	236	242	40	HW	10200	2+2	**131059** ●

Further knife types, dimensions and inch dimensions on request. Servicing with spare parts only by the manufacturer. VariPlan Plus spare knives in section Knives and Spare Parts.

Spare knives:

BEZ	SB mm	ABM mm	QAL	ID LH	ID RH
ProFix F knife PF 25 R=3	20	R=3	HW	**011041** ●	**011042** ●
ProFix F knife PF 25 R=5	20	R=5	HW	**011043** ●	**011044** ●
ProFix F knife PF 25 R=10	20	R=10	HW	**011047** ●	**011048** ●
ProFix F knife PF 25 Bevel 45°	20	Bevel 45°	HW	**011051** ●	**011052** ●

Further profile knives on request.

Spare parts:

BEZ	ABM mm	ID LH	ID RH
Knife holder for edge knives	D=125, SW=20°	**011301** ●	**011300** ●
Knife holder for grooving knives	D=125, SW=20°, NT=6	**011303** ●	**011302** ●
Allen key	SW 4		**005445** ●
Allen key	SW 5		**005452** ●

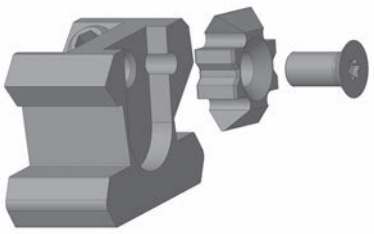

Knife holder to adapt edge knives.

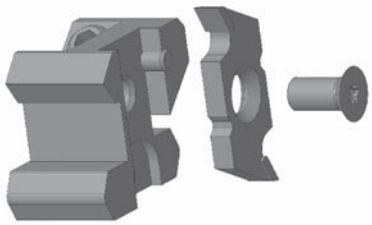

Knife holder to adapt grooving knives.

● available ex stock
□ available at short notice
Instruction manual visit www.leitz.org



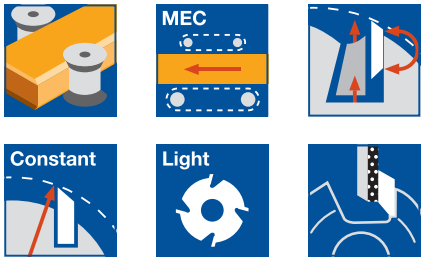

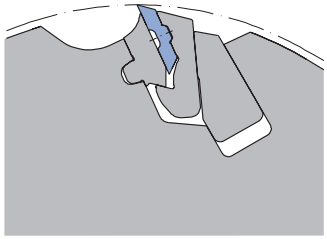

Lightweight aluminium tool body with steel chip breaker

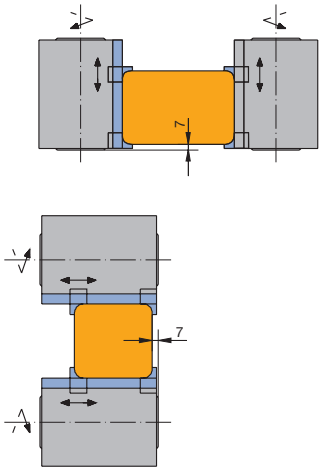

Use on vertical or horizontal spindles
HD = SB - 40 mm

Planerhead VariPlan Plus / ProFix F system PF 25

Application:
For planing and profiling (chamfering) e.g. grooving, bevelling, rounding or profiling in common.

Machine:
Four-sided moulders with HSK 85 WS interface.

Workpiece material:
Softwood and hardwood.

Technical information:
Resharpenable cutterhead system with constant diameter and constant profile. VariPlan Plus planerhead with knife seatings for ProFix F profile knives (PF 25) and HW microfinish turnblade knives. Profile knives: PT_{max} 25 mm, SB_{max} 100 mm. Lightweight aluminium tool body.

HSK 85 WS
WP 240 2 01

D mm	SB mm	A mm	Z	n_{max} min^{-1}	DRI	BEM	ID
125	130	26	2+2	10200	LH	left/ on bottom	**131120** □
125	130	26	2+2	10200	RH	right/ on top	**131121** □
125	166	26	2+2	10200	LH	left/ on bottom	**131116** □
125	166	26	2+2	10200	RH	right/ on top	**131117** □
125	236	26	2+2	10200	LH	on bottom	**131118** □
125	236	26	2+2	10200	RH	on top	**131119** □

Further knife types, dimensions and inch dimensions on request. Servicing with spare parts only by the manufacturer. VariPlan Plus spare knives in section Knives and Spare Parts.

Spare knives:

BEZ	SB mm	ABM mm	QAL	ID LH	ID RH
ProFix F knife PF 25 R=3	20	R=3	HW	**011041** ●	**011042** ●
ProFix F knife PF 25 R=5	20	R=5	HW	**011043** ●	**011044** ●
ProFix F knife PF 25 R=10	20	R=10	HW	**011047** ●	**011048** ●
ProFix F knife PF 25 Bevel 45°	20	Bevel 45°	HW	**011051** ●	**011052** ●

Further profile knives on request.

Spare parts:

BEZ	ABM mm	ID LH	ID RH
Knife holder for edge knives	D=125, SW=20°	**011301** ●	**011300** ●
Knife holder for grooving knives	D=125, SW=20°, NT=6	**011303** ●	**011302** ●
Allen key	SW 4		**005445** ●
Allen key	SW 5		**005452** ●

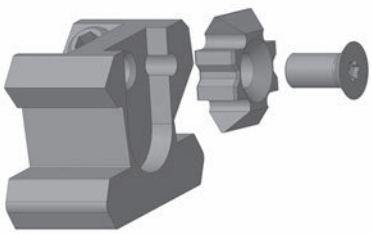

Knife holder to adapt edge knives.

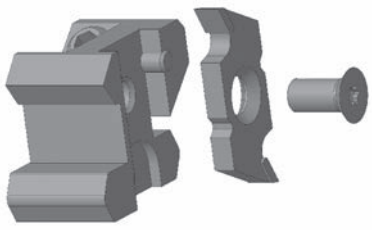

Knife holder to adapt grooving knives.

● available ex stock
□ available at short notice
Instruction manual visit www.leitz.org

Profile variations

Tongue and groove profiles are used on wall, ceiling and floor panels.
The profiles are standardised and different in each country.
The tools for machining solid wood panels presented on the following product pages are the most common designs in Europe.
The majority of tools for wall and ceiling panel machining are produced to customer specifications.

Workpiece materials

Softwood and medium hardwood.

Machines

Four-sided moulders with feed speeds up to 80 m min^{-1}.
Machines with high precision spindles and jointing units for feed speeds up to 300 m min^{-1}.

Application

Machining against feed, panel face down. Groove right, tongue left.
Groove machined either as a part of the groove profile or separately on a horizontal spindle.

Tool design

HL solid cutter:
HL solid cutters are form ground with a large resharpening area.
Suitable for softwood such as spruce or fir. The main application is high speed moulders for producing standardised tongue and groove boards in high quantities and with high quality requirements.

HW/HS-tipped tools:
HW/HS-tipped tools have a smaller resharpening area of approx. 5 mm depending on the tipping thickness. HW/HS-tipped tools are suitable for softwood and hardwood. They are mainly used on small volume moulding machines with frequent profile changes.

Design of grooving and tongue cutter sets

Tongue and groove cuttersets are of 2 part, adjustable.



Tongue cutter:
Always wing on wing.



Grooving cutter:
two designs –
wing on wing or
wing on gullet

Wing-on-wing design:
With the wing-on-wing design, the two parts of the cutter set are positioned with the cutting edges on top of each other and the gullets in line so the two parts can be resharpened simultaneously.
Advantage: Resharpening simpler and greater resharpening area.
Disadvantage: Only every other groove wing is cutting the groove flank.
For a Z 6 groove cutter, only three groove wings are cutting each side of the groove.
Tear-outs can occur at high feed speeds.



Wing-on-gullet design:
Unless indicated otherwise, Leitz delivers wing-on-gullet design as a standard.
With this design, the two cutter parts are adjusted so that the wings of one part lie in the gullets of the other part.
Advantage: All the wings are constantly working on the groove side.
This design is preferable for high feed speeds.

Relation between feed rate, RPM and number of wings

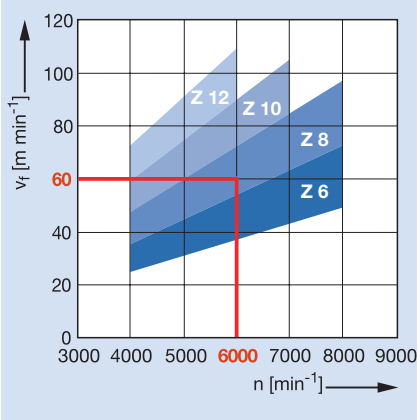

For tools without hydro clamping, only the marks of one knife show on the surface (one-knife finish).
When calculating the maximum feed speed, only one cutting edge can be taken into account.
If the tool is clamped with a hydro clamping system and the profiling is resharpened to a concentricity of at least 0.01 mm, all cutting edges are equally involved in the cutting process and can be taken into account when calculating the maximum feed speed.

f_z 0.8 - 1.5 mm

Profile samples for groove and tongue panels

German standard profiles

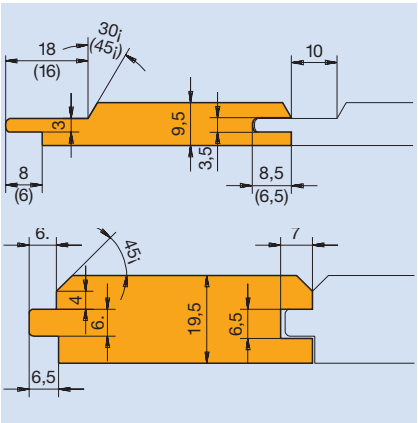

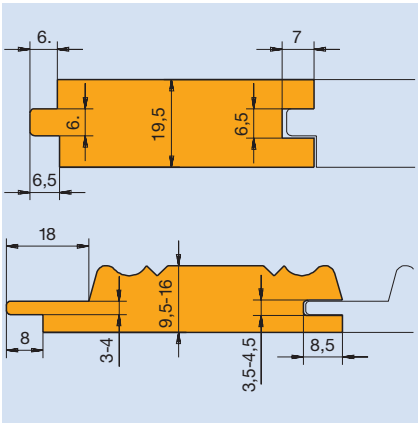

Australian standard profiles

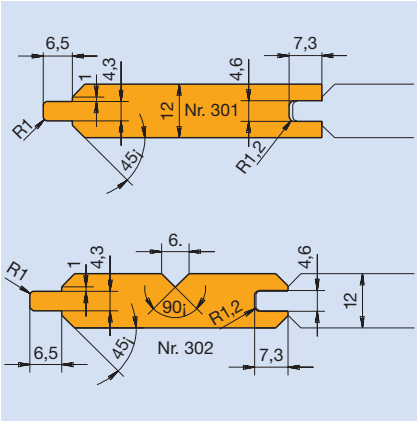

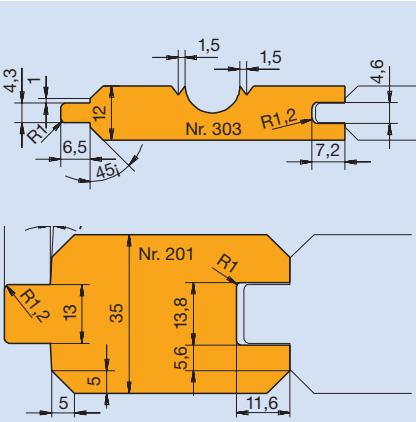

Scandinavian standard profiles

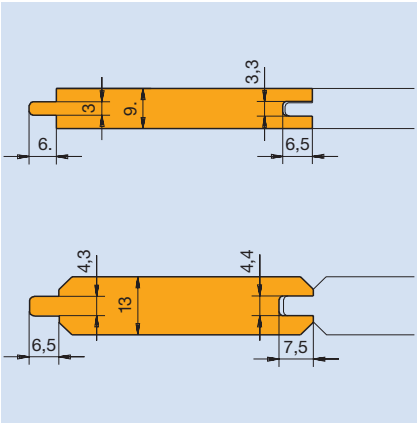

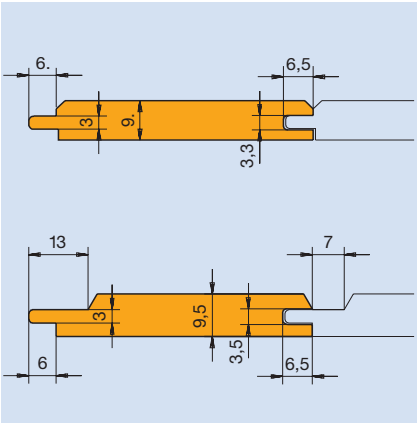

Canadian standard profiles

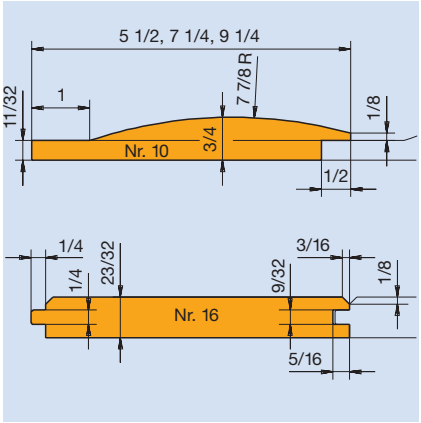

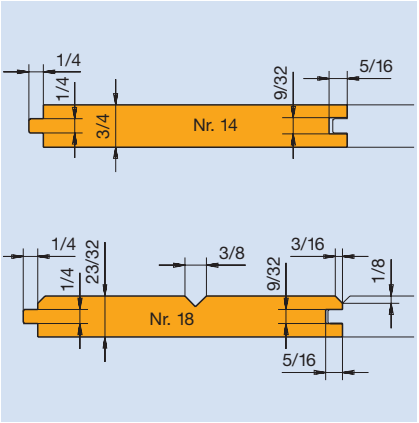

European country-house profiles

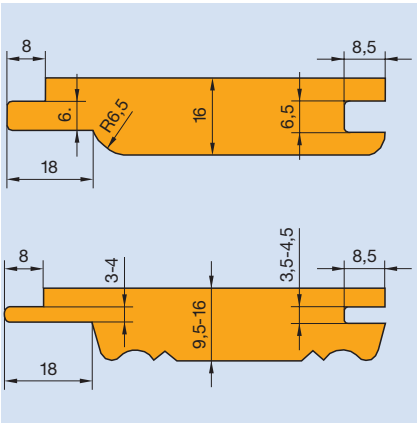

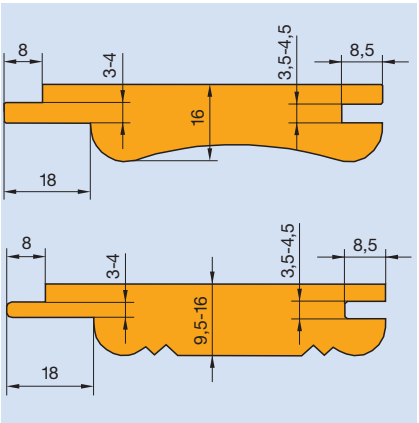

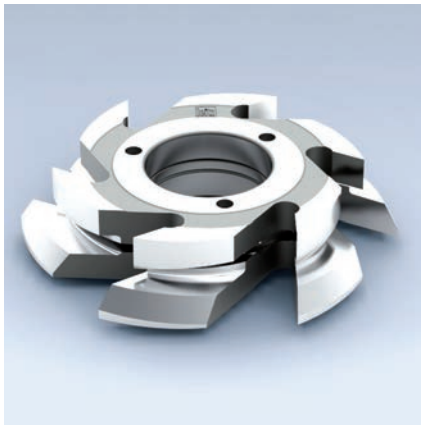

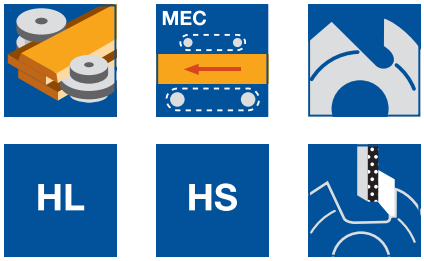

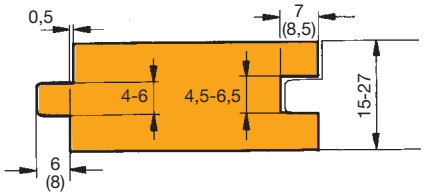

Profile 3: AF 200 2

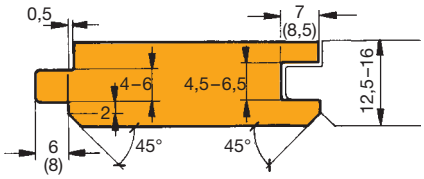

Profile 5: AF 210 2

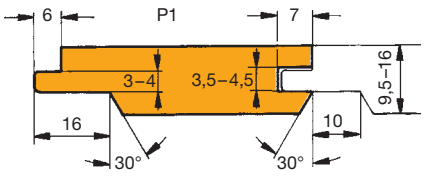

Profile 1: AF 240 2

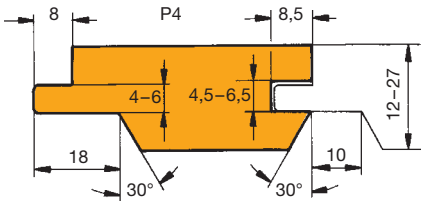

Profile 4: AF 240 2

Tongue and groove cutter, HL solid / HS tipped

Application:
For tongue and groove profiles on wall and ceiling panels.

Machine:
Four-sided moulders.

Workpiece material:
Softwood, along grain.

Technical information:
Tongue and groove cutterset with spacers for adjustment to different wood thicknesses and tongue and groove widths. BO 60 for use on hydro sleeve for high feed speeds and machining qualities. HL profile cutter with form ground clearance and large resharpening area; HS tipped design with straight clearance.

Straight with closed joint (P3), as viewed from finished face
AF 200 2

P	D mm	BO mm	HD mm	Z	NT mm	FL mm	n_{max} min^{-1}	QAL	ID
3	180	60	15 - 27	6	8,5	8	9000	HL	**021876**
3	160	40	15 - 27	6	8,5	8	9000	HS	**022016**

Bevel profile with closed joint (P5), as viewed from finished face
AF 210 2

P	D mm	BO mm	HD mm	Z	NT mm	FL mm	n_{max} min^{-1}	QAL	ID
5	160	40	12,5 - 16	6	7	6	9000	HS	**021913**

Bevel profile (P1, P4)
AF 240 2

P	D mm	BO mm	HD mm	NT mm	FL mm	Z	n_{max} min^{-1}	QAL	ID
1	180	60	12 - 27	7	6	6	9000	HL	**021964**
4	180	60	12 - 27	8	8,5	6	9000	HL	**021969**

Radius profile R5 (P6)
AF 221 2

P	D mm	BO mm	HD mm	NT mm	FL mm	Z	n_{max} min^{-1}	QAL	ID
6	180	60	14 - 19	10	10,5	6	9000	HL	**021883**

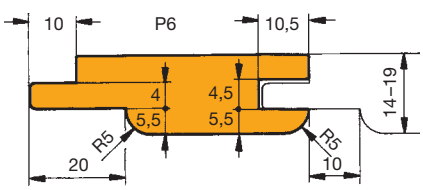

Profile 6: AF 221 2

● available ex stock
□ available at short notice
Instruction manual visit www.leitz.org





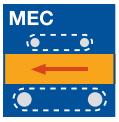







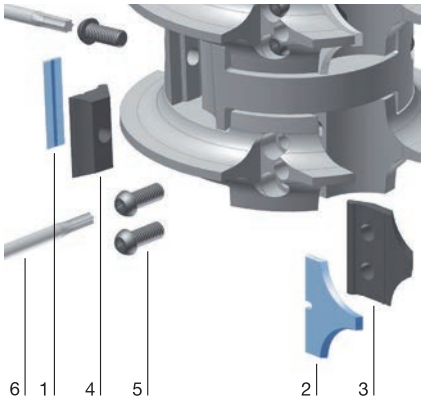

Profile cutterhead set ProfilCut Q - bevelling / rounding

Application:
Multi-purpose tool set for bevelling, rounding and jointing the workpiece edges at the same time.

Machine:
Spindle moulders, copy shaping and moulders, double-end tenoner.

Workpiece material:
Softwood and hardwood.

Technical information:
With a combination of jointing and bevelling/rounding cutterheads, different profiles and wood thicknesses can be machined. Profile knives with different radii/bevels can be mounted in one cutterhead.

Mechanical feed
SE 541 2 53

Tool Type	D_0 mm	AW PCS	n_{max} min^{-1}	Z	ID
Jointing-rounding	125	2	8000	2	**126200** □
Rounding-jointing-rounding	125	3	8000	2	**126201** □
Rounding-rounding	125	2	8000	2	**126202** □

Further radii are available at short notice.

Spare parts:

Part-no.	BEZ	ABM mm	Tool no.	ID
3	Clamping wedge	17x23x8,27	1/2	**630140**
3	Clamping wedge	32x28x8.27	3/4	**630141**
3	Clamping wedge	37x29,7x8,27	5	**630142**
3	Clamping wedge	37x29,7x8,27	6	**630143**
3	Clamping wedge	47x31,8x8,27	7	**630144**
3	Clamping wedge	47x31,8x8,27	8	**630145**
4	Clamping wedge	18x18,75x8,27	20	**630204** ●
4	Clamping wedge	33x18,75x8,27	35	**630208** ●
4	Clamping wedge	48x18,75x8,27	50	**630211** ●
5	Clamping screw w. disc, Torx® 20	M5x18.5		**007446** ●
6	Torx® key	Torx® 20		**117503** ●

Part no. 1 and 2 - spare knives, see detailed overview on the following pages.

ID. **126200**

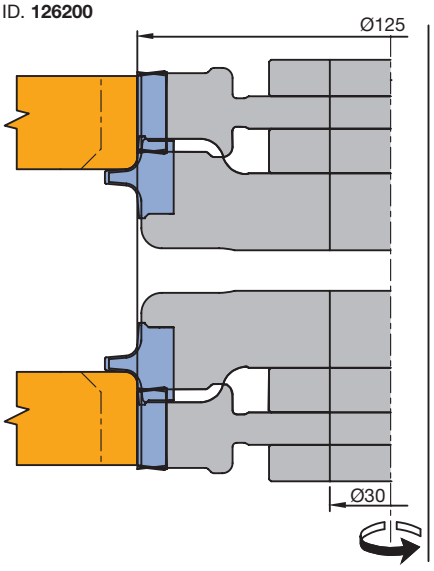

ID. **126201**

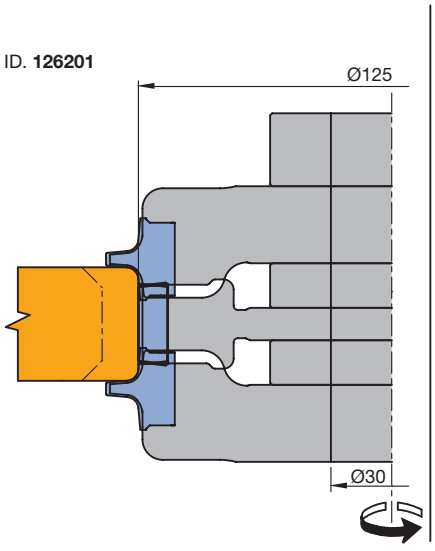

ID. **126202**

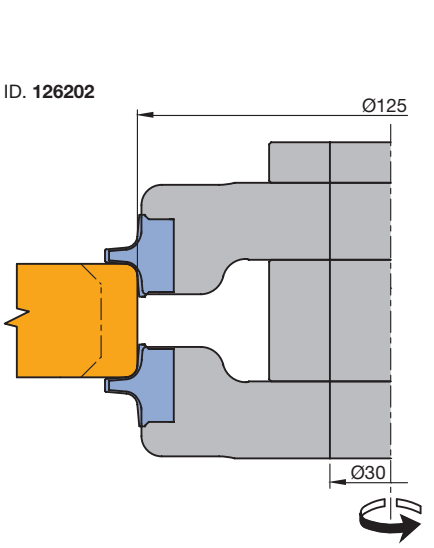

● available ex stock
□ available at short notice
Instruction manual visit www.leitz.org

ID. 126200

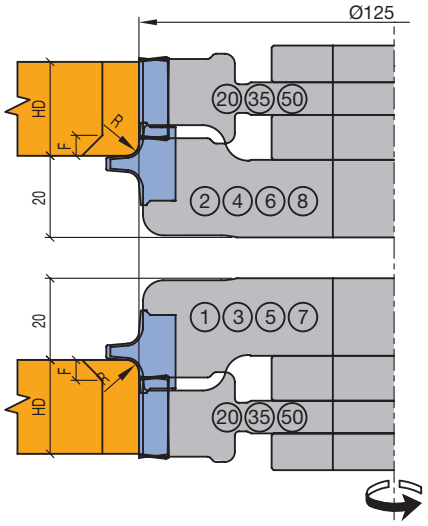

Order example:
-Combination ID 126200
-Profile description top down RL
jointingSB35/R5 or R5/jointingSB35
-Bore diameter 30

Wood thickness (HD):

Jointing tool	20	35	50
max. HD	18+R (F)	33+R (F)	48+R (F)

F (bevel) max. = 5 or 9x45“

ID. 126201

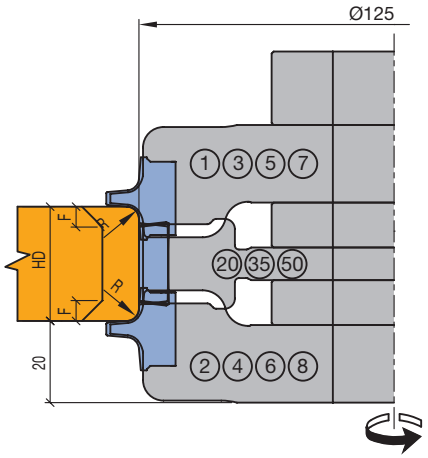

Order example:
-Combination ID 126201
-Profile description top down RL
R5/jointingSB35/R5
-Bore diameter 30

Radii tools	Jointing tool 20	35	50	Minimum wood thickness
No.1+2	6	12	24	
No.1+4	13	19	31	
No.1+6	18	24	36	
No.1+8	28	34	46	
No.3+2	13	19	31	
No.3+4	20	26	38	
No.3+6	25	31	43	
No.3+8	35	41	53	
No.5+2	18	24	36	
No.5+4	25	31	43	
No.5+6	30	36	48	
No.5+8	40	46	58	
No.7+2	28	34	46	
No.7+4	35	41	53	
No.7+6	40	46	58	
No.7+8	50	56	68	
max. HD	18+R+R (F+F)	33+R+R (F+F)	48+R+R (F+F)	

F (bevel) max. = 3, 5, 7x45“ or 8x40“
Wood thicknesses are calculated with max. bevel

ID. 126202

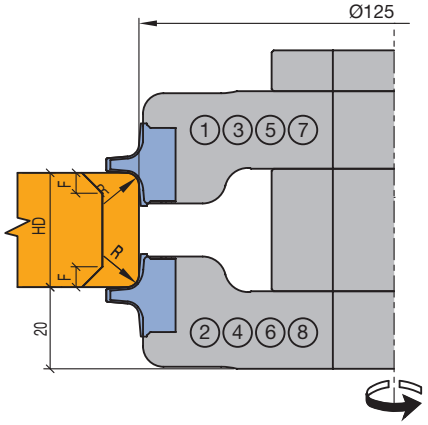

Order example:
-Combination ID 126202
-Profile description top down RL
R5/R5
-Bore diameter 30

Radii tools		Minimum wood thickness
No.1+2	-2	
No.1+4	5	
No.1+6	10	
No.1+8	20	
No.3+2	5	
No.3+4	12	
No.3+6	17	
No.3+8	27	
No.5+2	10	
No.5+4	17	
No.5+6	22	
No.5+8	32	
No.7+2	20	
No.7+4	27	
No.7+6	32	
No.7+8	42	

Spare part:
clamping wedge 630140

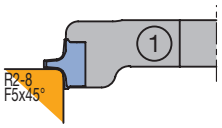

WZ 125502 ME 619247	R4	
WZ 125503 ME 619248	R5	
WZ 125504 ME 619249	R6	
WZ 125505 ME 619250	R7	
WZ 125500 ME 619245	R2	
WZ 125506 ME 619251	R8	
WZ 125501 ME 619246	R3	
WZ 125507 ME 619253	F5x45°	

Spare part:
clamping wedge 630141

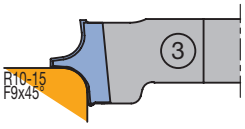

WZ 125517 ME 619255	R11	
WZ 125518 ME 619256	R12	
WZ 125519 ME 619257	R13	
WZ 125520 ME 619258	R14	
WZ 125521 ME 619259	R15	
WZ 125516 ME 619254	R10	
WZ 125522 ME 619260	F9x45°	

Spare part:
clamping wedge 630142

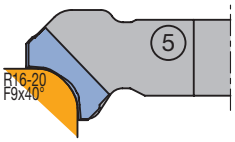

WZ 125530 ME 619263	R16	
WZ 125531 ME 619264	R17	
WZ 125532 ME 619265	R18	
WZ 125533 ME 619266	R19	
WZ 125534 ME 619267	R20	
WZ 125535 ME 619269	F9x40°	

Spare part:
clamping wedge 630140

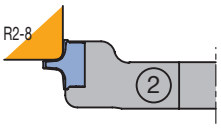

WZ 125510 ME 619247	R4	
WZ 125511 ME 619248	R5	
WZ 125512 ME 619249	R6	
WZ 125513 ME 619250	R7	
WZ 125508 ME 619245	R2	
WZ 125514 ME 619251	R8	
WZ 125509 ME 619246	R3	
WZ 125515 ME 619253	F5x45°	

Spare part:
clamping wedge 630141

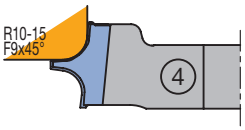

WZ 125524 ME 619255	R11	
WZ 125525 ME 619256	R12	
WZ 125526 ME 619257	R13	
WZ 125527 ME 619258	R14	
WZ 125528 ME 619259	R15	
WZ 125523 ME 619254	R10	
WZ 125529 ME 619260	F9x45°	

Spare part:
clamping wedge 630143

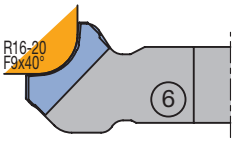

WZ 125536 ME 619271	R16	
WZ 125537 ME 619272	R17	
WZ 125538 ME 619273	R18	
WZ 125539 ME 619274	R19	
WZ 125540 ME 619275	R20	
WZ 125541 ME 619277	F9x40°	

Spare part:
clamping wedge 630144

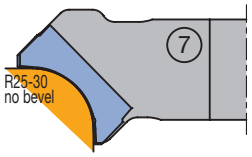

WZ 125542 ME 619279	R25	
WZ 125543 ME 619280	R26	
WZ 125544 ME 619281	R27	
WZ 125545 ME 619282	R28	
WZ 125546 ME 619283	R29	
WZ 125547 ME 619284	R30	

SB 20



WZ 125680
ME 601604
VE 10 pcs.)
Wedge 630204

SB 35

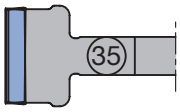

WZ 125681
ME 601607
VE 10 pcs.)
Wedge 630208

SB 50

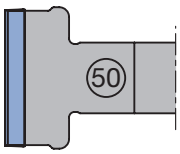

WZ 125682
ME 601610
VE 10 pcs.)
630211

Spare part:
clamping wedge 630145

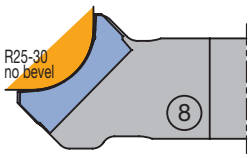

WZ 125548 ME 619285	R25	
WZ 125549 ME 619286	R26	
WZ 125550 ME 619287	R27	
WZ 125551 ME 619288	R28	
WZ 125552 ME 619289	R29	
WZ 125553 ME 619290	R30	

Spacer set
(one set per cutterhead necessary)



60x20x30

● available ex stock
□ available at short notice
Instruction manual visit www.leitz.org

Process steps

The cutterheads presented in the following section are suitable for a variety of profiles in the craft and industrial sectors.
Due to the different application possibilities, the use of the tool and wood types to be machined are detailed on the respective product pages.

Relation between surface quality and length of knife marks $f_{z\ eff}$

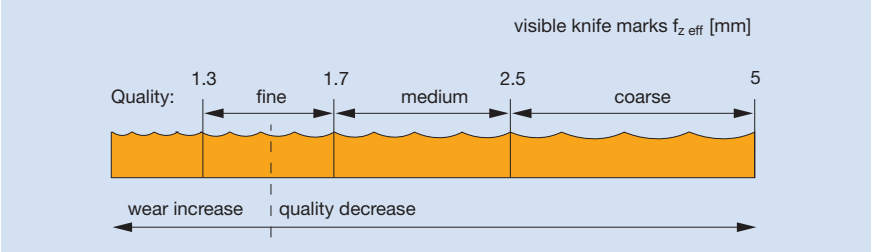

Cutterhead without hydro clamping: Feed speeds depending on RPM, length of knife marks and number of wings

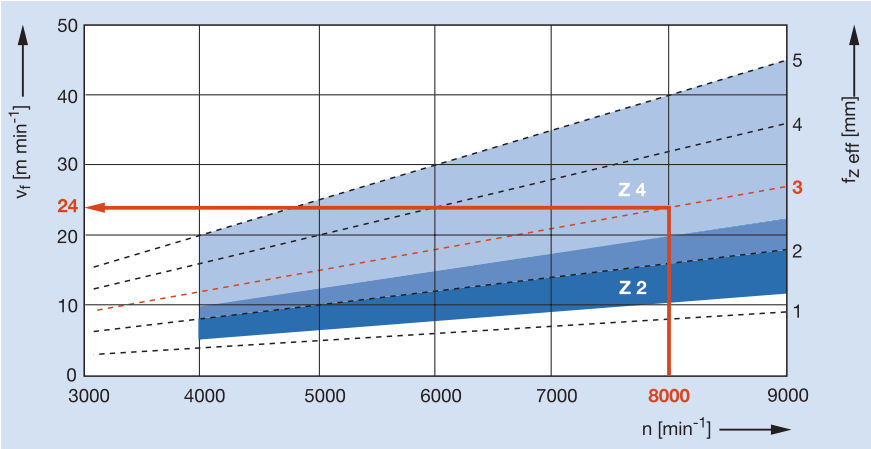

Cutterhead with hydro clamping: Feed speeds depending on RPM, length of knife marks and number of wings

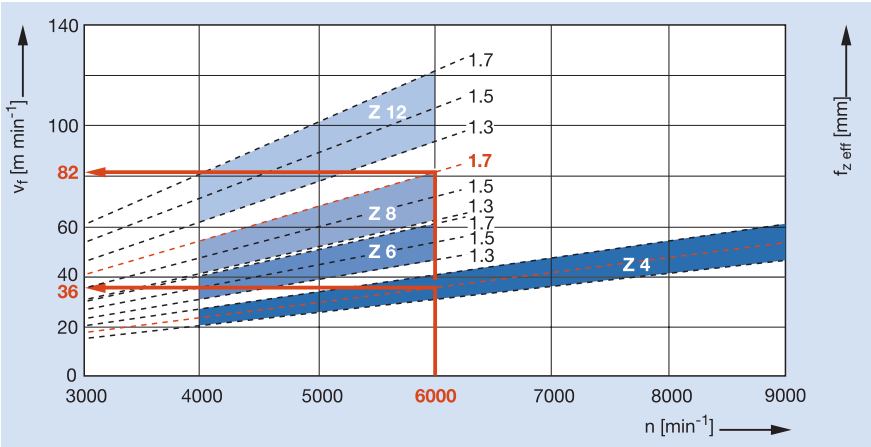

Profile cutterheads for serrated back blank knives



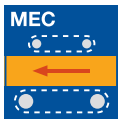



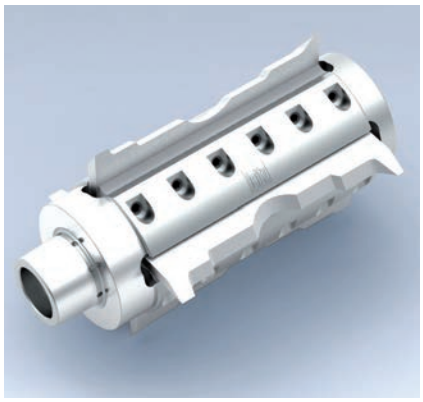



Application	Multi-purpose profiling, machining along grain.
Machines	Four-sided moulders and profiling machines.
Workpiece materials	Softwood and hardwood.
Number of teeth	Z 2, Z 4.
Cutting material	Marathon (MC), HW.
Resharpening area	10.8 mm (9 + 1.8 mm) Marathon (MC) and HW blank knife with backing plate.
Feed	Four-sided profiling.
Tool design	Steel tool body. High concentricity and balance. Knife seat for serrated back knives in HS and MC 33, thickness 8 mm, and HW and HW PowerKnifeSystem (MicroSystem blank knives), total thickness 10 mm (HW blank knife and backing plate). Standard pitch 1.6 mm.
Advantages	Optimal cutting speed with n = 12,000 min-1 and thus improved finish quality. For optimal finish quantity we recommend to grind in the profile blanks in the cutterhead and joint them additionally on the machine.
Note	Cutting angle 20° for softwood. Cutting angle 12° for hardwood and wood fibre materials. PowerKnifeSystem (HW MicroSystem) blank knives with a knife height of 70 mm can only be used for cutting widths up to 150 mm. For jointing: resharpened concentricity of < 0.005 mm.





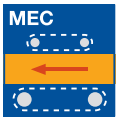







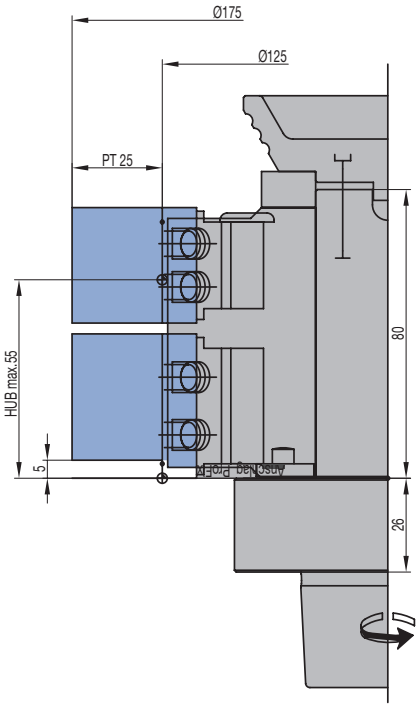

Profile cutterhead ProFix F

Application:
Flexible profiling of different profiles, suitable for panel production.

Machine:
Four-sided moulders and profile machines.

Workpiece material:
Softwood and hardwood, with grain.

Technical information:
Resharpenable, diameter and profile constant tooling system. Easy profile adjustment through knife change. No tool measurement required. To adapt ProFix F knives with 4.5 mm resharpening area and a profile depth of 25 mm maximum Lightweight aluminium tool body. Division of maximum cutting width to several knives possible.

Bore 40 mm
HY 500 2 25

D_0 mm	PT mm	SB mm	n_{max} min^{-1}	Z	ID
125	25	20 - 70	10000	2	**014044** ●
125	25	20 - 90	10000	2	**014043** ●

HSK 85 WS
HY 500 2 25

D_0 mm	PT mm	SB mm	n_{max} min^{-1}	BEM	Z	ID
125	25	20 - 70	10000	right/top	2	**014046** □
125	25	20 - 70	10000	left/bottom	2	**014048** □
125	25	20 - 90	10000	right/top	2	**014045** □
125	25	20 - 90	10000	left/bottom	2	**014047** □

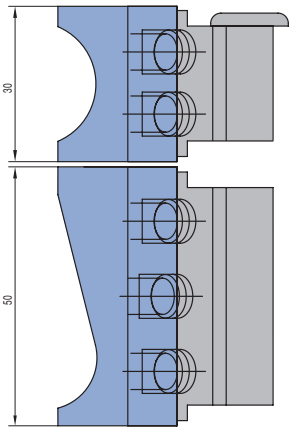

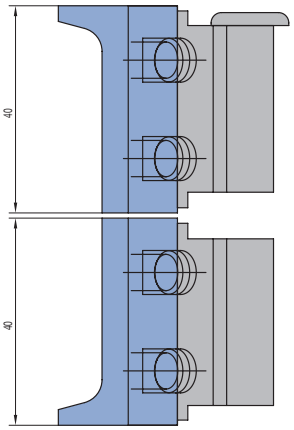

● available ex stock
□ available at short notice
Instruction manual visit www.leitz.org




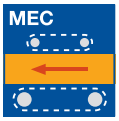






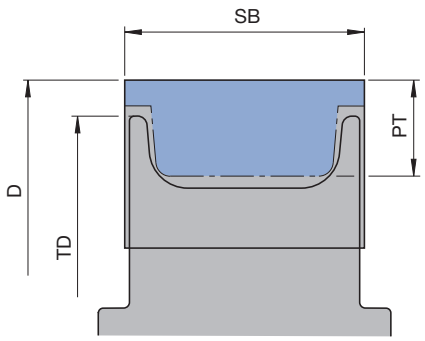

Tool body, U profile

Table of the 0-diameter (D_0)
for adjusting the machine spindles

D mm	TD mm	D_0 mm
150	135	110
165	140	125
180	165	140

Profile cutterhead VariForm

Application:
For cutting profiles. Different profiles with maximum 20 mm profile depth can be mounted.

Machine:
Moulders, double-end tenoners, edgebanding machines etc.

Workpiece material:
Softwood and hardwood (HW-30F), panel materials or glued wood (HW-10F).

Technical information:
Multi-purpose cutterhead for MEC feed with tungsten carbide special profile knives and backing plates.
Resharpenable 3 to 4 times.

Partly profiled tool body, MEC feed, Z 2 - Z 4 U profile
TT 531 2

D mm	TD mm	SB mm	BO mm	BO_{max} mm	PT_{max} mm	Z	n_{max} min^{-1}	ID
165	140	40	30	40	20	2	10000	**135212** ●
165	140	60	30	40	20	2	10000	**134214**
180	165	40	30	50	20	4	9000	**135206** ●
180	165	60	30	50	20	4	9000	**135208** ●

Supplied with clamping wedges, but without backing plates and knives.

Spare knives:

Teile-Nr.	H mm	SB mm	ID HW-10F	ID HW-30F
1	45	40	**636226** ●	**636239** ●
1	45	60	**636287** ●	**636275** ●

Spare parts:

Part-no.	BEZ	ABM mm	for SB mm	ID
2	Backing plate VariForm	for knives 40x45x2.1		**645004** ●
2	Backing plate VariForm	for knives 60x45x2.1		**645006** ●
3	Clamping wedge	36x13,21x26	40/45	**009756** ●
3	Clamping wedge	56x13,21x26	60	**009757** ●
4	Allen screw with ISK 5	M10x12		**006044** ●
	Allen key	SW 5, L100		**117506** ●

Tool system description VariForm see section Profile Tool Systems.

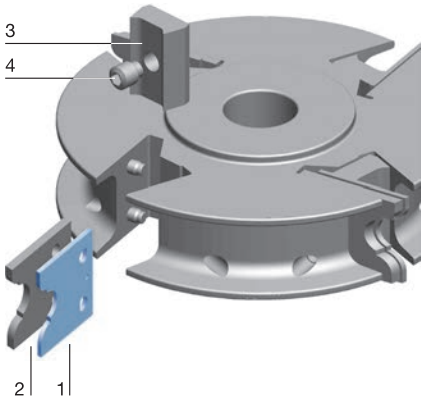

● available ex stock
□ available at short notice
Instruction manual visit www.leitz.org

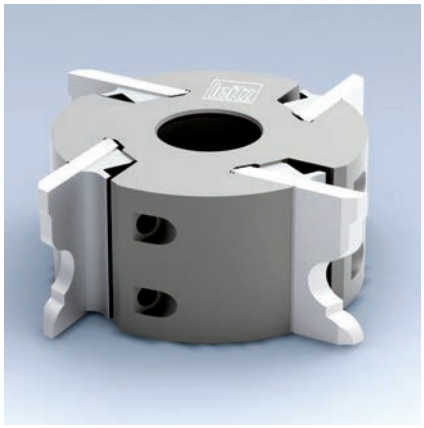



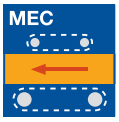





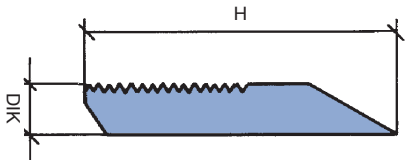

Serrated back blank knives with high precision serration, serration angle 60°, pitch 1.6 mm.

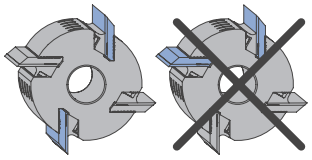

Attention:
For safety reasons, always mount knives and backing plates (VE) of the same weight opposite to each other.

H mm	QAL	PT mm
50	MC	15
60	MC	20
70	MC	30
50	HW	10
60	HW	18

Table to determine maximum profile depth.
The profile depth figures are to be regarded as standard values. The maximum profile depth depends on the tool diameter and cutting angle.

Profile cutterheads for serrated back blank knives

Application:
For multi-purpose profiles in hard and/or materials likely to splinter.

Machine:
Four-sided moulders.

Workpiece material:
Cutting angle 20° for softwood and hardwood in general.

Technical information:
Profile cutterhead with 60° serration, 1.6 mm pitch. Steel tool body. Blank knives with knife thickness 8 - 10 mm and knife heights of 40 - 70 mm can be used depending on required profile depth. Cutting materials: Marathon (MC) and HW.

Cutting angle 20°
WM 501 2 05

TD mm	SB mm	BO mm	BO_{max} mm	n_{max} min^{-1}	Z	ID
122	80	40	40	10300	2	**135805** ●
122	40	40	40	10300	4	**135802** ●
122	60	35	40	10300	4	**135806** ●
122	60	40	40	10300	4	**135808** ●
122	80	40	40	10300	4	**135809** ●
122	100	35	40	10300	4	**135810**
122	100	40	40	10300	4	**135812** ●
122	130	40	40	10300	4	**135814** ●
122	150	40	40	10300	4	**135817** ●
122	170	40	40	10300	4	**135816** ●
122	180	40	40	10300	4	**135819** ●
122	230	40	40	10300	4	**135821** ●
122	240	40	40	10300	4	**135822**
137	60	40	50	9400	4	**135823**
137	60	50	50	9400	4	**135825** ●
137	80	50	50	9400	4	**135826** ●
137	100	40	50	9400	4	**135827**
137	100	50	50	9400	4	**135829** ●
137	130	40	50	9400	4	**135830**
137	130	50	50	9400	4	**135831** ●
137	150	50	50	9400	4	**135833** ●
137	180	50	50	9400	4	**135836**
137	230	50	50	9400	4	**135838** ●

Cutting angle 12°
WM 501 2 05

TD mm	SB mm	ND mm	BO mm	Z	ID
122	40	40	40	4	**135840**
122	60	60	40	4	**135841**
122	80	80	40	4	**135842**
122	130	130	40	4	**135843**

Cutterhead without knives. For blank knives in different dimensions and qualities, see section Knives and Spare Parts.
Lightweight aluminium design on request.

Spare parts:

Part-no.	BEZ	ABM mm	for SB mm	ID
2	Clamping wedge	38x25,3x10,8	40	**620700** ●
2	Clamping wedge	58x25,3x10,8	60	**620701** ●
2	Clamping wedge	78x25,3x10,8	80	**620702** ●
2	Clamping wedge	98x25,3x10,8	100	**620703** ●
2	Clamping wedge	128x25,3x10,8	130	**620705** ●
2	Clamping wedge	148x25,3x10,8	150	**620706** ●
2	Clamping wedge	168x25,3x10,8	170	**620707** □
2	Clamping wedge	178x25,3x10,8	180	**620708** □
2	Clamping wedge	228x25,43x11	230	**620709** □
2	Clamping wedge	238x25,3x10,8	240	**620710** □
3	Allen screw	M10x1x20		**007396** ●
	Filler piece	40x30x8	40	**005305** ●
	Filler piece	60x30x8	60	**005306** ●
	Filler piece	80x30x8	80	**005307** ●
	Filler piece	100x30x8	100	**005308** ●
	Filler piece	130x30x8	130	**005310** ●
	Filler piece	150x30x8	150	**005311** ●
	Filler piece	170x30x8	170	**620770** ●
	Filler piece	180x30x8	180	**005312** ●
	Filler piece	230x30x8	230	**005313** ●
	Filler piece	240x30x8	240	**620771** ●
	Allen key	SW 5		**117509** ●

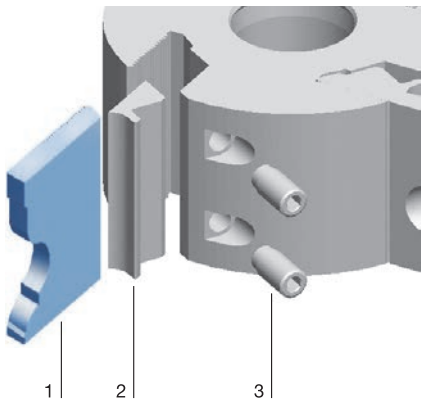

● available ex stock
□ available at short notice
Instruction manual visit www.leitz.org

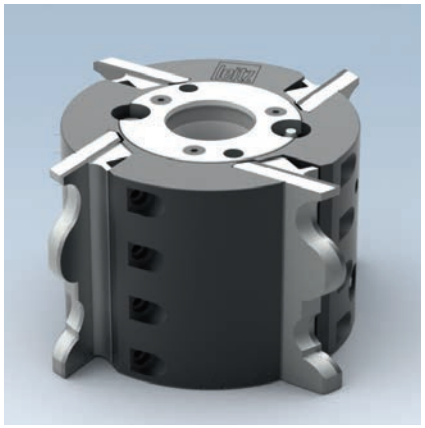



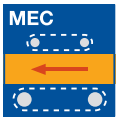







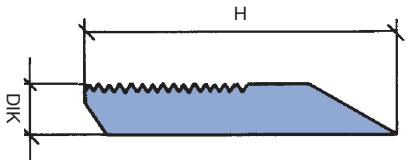

Serrated back blank knives with high precision serration, serration angle 60°, pitch 1.6 mm.

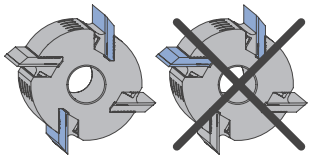

Attention:
For safety reasons, always mount knives and backing plates (VE) of the same weight opposite to each other.

H mm	QAL	PT mm
50	MC	15
60	MC	20
70	MC	30
50	HW	10
60	HW	18

Table to determine maximum profile depth.
The profile depth figures are to be regarded as standard values. The maximum profile depth depends on the tool diameter and cutting angle.

Hydro profile cutterhead for serrated back blank knives

Application:
Cutting of multi-purpose profiles with high feed speeds.

Machine:
Four-sided moulders and profile machines.

Workpiece material:
Softwood and hardwood.

Technical information:
Profile cutterhead with 60°-serration, 1.6 mm pitch. Steel tool body with corrosion resistant surface protection. For blank knives with 8 - 10 mm knife thickness and 5 mm (see table) and 40 - 70 mm knife height, depending on the required profile depth. Integrated hydro clamping system with exchangeable clamping sleeves. Activated by a grease gun. Hydro profile cutterheads can only be used in combination with a clamping collar.

Steel tool body
HM 501 2 05

TD mm	SB mm	BO mm	for knife thickness mm	Z	n_{max} min^{-1}	ID
135	100	40	8 - 10	4	9400	**137035**
135	150	40	8 - 10	4	9400	**137036**
145	60	50	8 - 10	6	9100	**137037**
145	100	50	8 - 10	6	9100	**137038**
150	60	50	8 - 10	4	8800	**137039** ●
150	100	50	8 - 10	4	8800	**137040** ●
150	150	50	8 - 10	4	8800	**137041** ●
150	230	50	8 - 10	4	8800	**137042** ●
150	60	50	8 - 10	6	8800	**137043** ●
150	100	50	8 - 10	6	8800	**137044** ●
150	150	50	8 - 10	6	8800	**137045** ●
150	230	50	8 - 10	6	8800	**137046**
165	60	50	8 - 10	8	8200	**137047**
165	100	50	8 - 10	8	8200	**137048**
170	60	50	8 - 10	8	8100	**137049** ●
170	100	50	8 - 10	8	8100	**137050**
170	150	50	8 - 10	8	8100	**137051** ●
190	60	50	5	12	7400	**137052**
190	60	50	5	14	7400	**137053**

Cutterhead without knives. Blanks in various dimensions and qualities see section Knives and Spare Parts.

Spare parts:

Part-no.	BEZ	ABM	for SB	ID
		mm	mm	
2	Clamping wedge	38x25,3x10,8	40	**620700** ●
2	Clamping wedge	58x25,3x10,8	60	**620701** ●
2	Clamping wedge	78x25,3x10,8	80	**620702** ●
2	Clamping wedge	98x25,3x10,8	100	**620703** ●
2	Clamping wedge	128x25,3x10,8	130	**620705** ●
2	Clamping wedge	148x25,3x10,8	150	**620706** ●
2	Clamping wedge	168x25,3x10,8	170	**620707** □
2	Clamping wedge	178x25,3x10,8	180	**620708** □
2	Clamping wedge	228x25,43x11	230	**620709** □
2	Clamping wedge	238x25,3x10,8	240	**620710** □
3	Allen screw	M10x1x20		**007396** ●
	Filler piece	40x30x8	40	**005305** ●
	Filler piece	60x30x8	60	**005306** ●
	Filler piece	80x30x8	80	**005307** ●
	Filler piece	100x30x8	100	**005308** ●
	Filler piece	130x30x8	130	**005310** ●
	Filler piece	150x30x8	150	**005311** ●
	Filler piece	170x30x8	170	**620770** ●
	Filler piece	180x30x8	180	**005312** ●
	Filler piece	230x30x8	230	**005313** ●
	Filler piece	240x30x8	240	**620771** ●
	Allen key	SW 5		**117509** ●

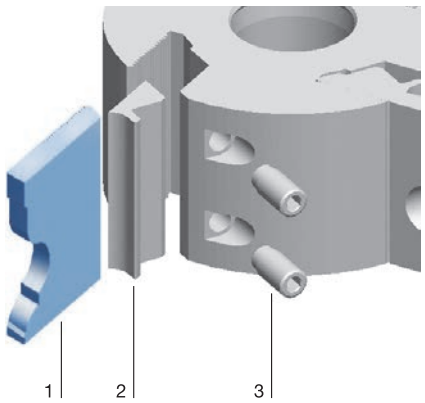

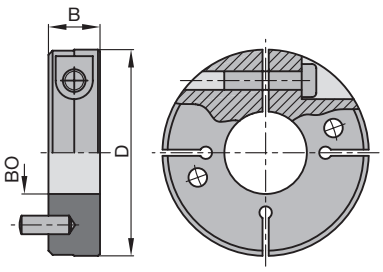

Clamping collar without thread

Clamping collars without thread

TD 870 0

D	B	BO	ID
mm	mm	mm	
100	25	40	**030700** ●
100	25	50	**030702** ●

● available ex stock
□ available at short notice
Instruction manual visit www.leitz.org





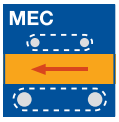





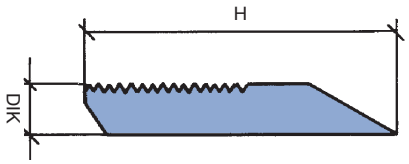

Serrated back blank knives with high precision serration, serration angle 60°, pitch 1.6 mm.

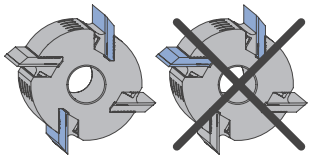

Attention:
For safety reasons, always mount knives and backing plates (VE) of the same weight opposite to each other.

H mm	QAL	PT mm
50	MC	15
60	MC	20
70	MC	30
50	HW	10
60	HW	18

Table to determine maximum profile depth.
The profile depth figures are to be regarded as standard values. The maximum profile depth depends on the tool diameter and cutting angle.

Profile cutterhead with HSK 85 WS for serrated back blank knives

Application:
For multi-purpose profiles in hard and/or materials likely to splinter.

Machine:
Four-sided moulders with HSK 85 WS interface.

Workpiece material:
Cutting angle 20° for softwood and hardwood in general.
Cutting angle 12° for materials likely to splinter e.g. oak, Douglas fir, merbau and wood fibre materials, e.g. MDF.

Technical information:
Profile cutterhead with back serration, 1.6 mm pitch, with integrated HSK.
Blanks with knife thickness 8 - 10 mm and knife heights of 40 - 70 mm can be used depending on the required profile depth. Cutting materials: Marathon (MC) and HW. Steel tool body. High balance quality by assembly with parts of the same weight.

Cutting angle 20°
WP 510 2 02

	TD mm	SB mm	A mm	Z	n_{max} min^{-1}	ID LH / bottom	ID RH / top
	90	40	26	2	12000	**136200**	**136201**
	90	60	26	2	12000	**136202** ●	**136203** ●
	90	80	26	2	12000	**136204** ●	**136205** ●
	90	100	26	2	12000	**136206** ●	**136207** ●
	90	130	26	2	12000	**136208** ●	**136209** ●
	90	150	26	2	12000	**136210**	**136211**
*	90	170	26	2	12000	**136212** ●	**136213** ●
*	90	210	26	2	12000	**136216**	**136217**
*	90	240	26	2	12000	**136218** ●	**136219** ●
	90	270	26	2	8000	**136220**	**136221**
	90	40	26	4	12000	**136224** ●	**136225** ●
	90	60	26	4	12000	**136226** ●	**136227** ●
	90	80	26	4	12000	**136228** ●	**136229** ●
	90	100	26	4	12000	**136230** ●	**136231** ●
	90	130	26	4	12000	**136232** ●	**136233** ●
	90	150	26	4	12000	**136234**	**136235**
*	90	170	26	4	12000	**136236** ●	**136237** ●
*	90	210	26	4	12000	**136240**	**136241**
*	90	240	26	4	12000	**136242** ●	**136243** ●
*	90	270	26	4	8000	**136244**	**136245**
	115	80	26	6	10000	**136198** ●	**136199** ●
	115	130	26	6	10000	**136400** ●	**136401** ●
	115	170	26	6	10000	**136402** ●	**136403** ●
	115	240	26	6	10000	**136404** ●	**136405** ●

* = Not for PKS blank knives H = 70 mm with n = 12000 min^{-1}
Cutterhead without knives. For blank knives in different dimensions and qualities, see section Knives and Spare Parts.

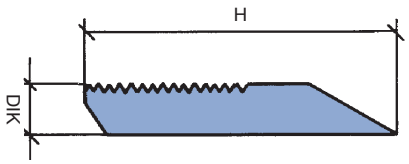

Serrated back blank knives with high precision serration, serration angle 60°, pitch 1.6 mm.

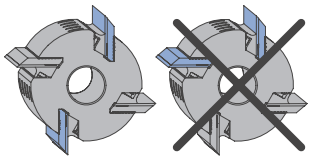

Attention:
For safety reasons, always mount knives and backing plates (VE) of the same weight opposite to each other.

H mm	QAL	PT mm
50	MC	15
60	MC	20
70	MC	30
50	HW	10
60	HW	18

Table to determine maximum profile depth.
The profile depth figures are to be regarded as standard values. The maximum profile depth depends on the tool diameter and cutting angle.

Cutting angle 12°
WP 510 2 02

	TD mm	SB mm	A mm	Z	n_{max} min^{-1}	ID LH / bottom	ID RH / top
	90	40	26	2	12000	**136248** ●	**136249** ●
	90	60	26	2	12000	**136250** ●	**136251** ●
	90	80	26	2	12000	**136252**	**136253**
	90	100	26	2	12000	**136254** ●	**136255** ●
	90	130	26	2	12000	**136256** ●	**136257** ●
	90	150	26	2	12000	**136258**	**136259**
*	90	170	26	2	12000	**136260**	**136261**
*	90	210	26	2	12000	**136264**	**136265**
*	90	240	26	2	12000	**136266**	**136267**
	90	40	26	4	12000	**136270** ●	**136271** ●
	90	60	26	4	12000	**136272** ●	**136273** ●
	90	80	26	4	12000	**136274** ●	**136275** ●
	90	100	26	4	12000	**136276** ●	**136277** ●
	90	130	26	4	12000	**136278**	**136279**
	90	150	26	4	12000	**136280**	**136281**
*	90	170	26	4	12000	**136282**	**136283**
	115	80	26	6	10000	**136192**	**136193**
	115	130	26	6	10000	**136194**	**136195**
	115	170	26	6	10000	**136196**	**136197**

* = Not for PKS blank knives H = 70 mm with n = 12000 min^{-1}
Cutterhead without knives. For blank knives in different dimensions and qualities, see section Knives and Spare Parts.

Spare parts:

BEZ	for knife thickness mm	for SB mm	ID
Clamping wedge	8/10	40	**620816** ●
Clamping wedge	8/10	60	**620817** ●
Clamping wedge	8/10	80	**620818** ●
Clamping wedge	8/10	100	**620819** ●
Clamping wedge	8/10	130	**620820** ●
Clamping wedge	8/10	150	**620821** ●
Clamping wedge	8/10	170	**620822** ●
Clamping wedge	8/10	190	**620823** ●
Clamping wedge	8/10	210	**620824** ●
Clamping wedge	8/10	240	**620825** ●
Clamping wedge	8/10	270	**620826** ●
Clamping wedge	8/10	310	**620827** ●
Allen screw			**007396** ●
Filler piece		40	**005305** ●
Filler piece		60	**005306** ●
Filler piece		80	**005307** ●
Filler piece		100	**005308** ●
Filler piece		130	**005310** ●
Filler piece		150	**005311** ●
Filler piece		170	**620770** ●
Filler piece		190	**620772** ●
Filler piece		210	**620773** ●
Filler piece		240	**620771** ●
Filler piece		270	**620774** ●
Filler piece		310	**620775** ●
Allen key			**117509** ●

● available ex stock
□ available at short notice
Instruction manual visit www.leitz.org

Process step	Cutting high-strength finger joint profiles for longitudinal jointing of workpieces. The finger profiles meet the requirements of the testing institutes.
Machines	Single and double side finger jointing machines with and without cut-off saw or scoring saws, double-end tenoners, compact finger joint lines, cross profile and standard machines.
Tools	For finger joint machines without cut-off saw: Use minifinger tools with the following finger lengths: 10/10, 15/15 or 20/20 mm. For finger joint machines with cut-off saw: Use minifinger tools with the following finger lengths: 10/11, 15/16.5 or 20/22 mm.

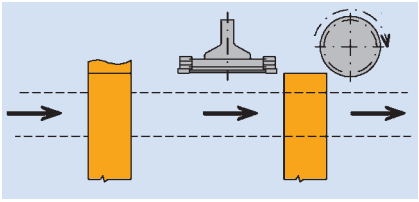

Minifinger jointing machine with cut-off.

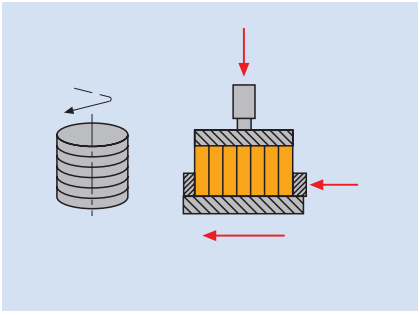

Vertical finger jointing machine/stack machine.

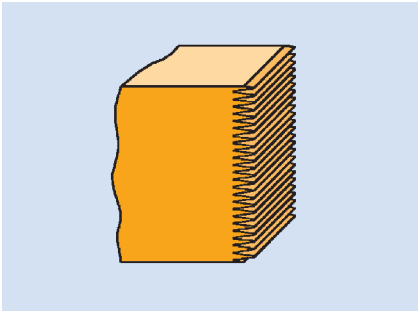

Vertical finger jointing.

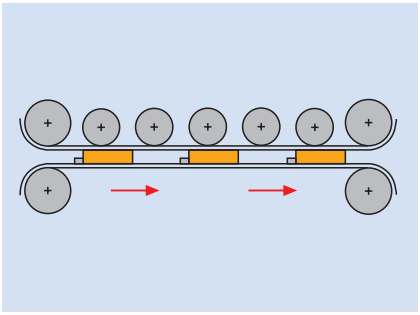

Horizontal finger jointing line.

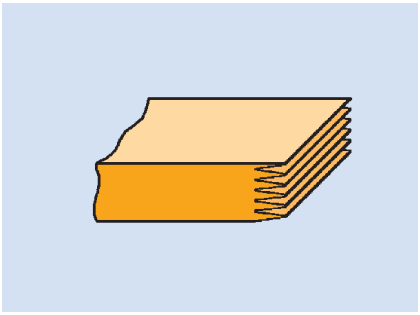

Horizontal finger jointing.

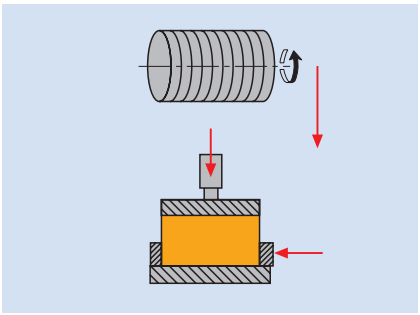

Compact finger jointing line.

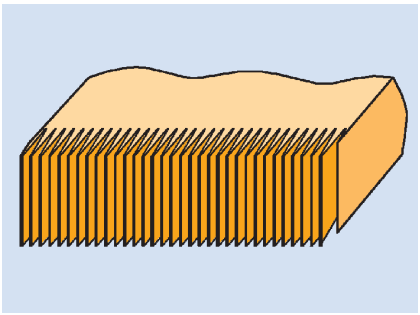

Compact finger jointing.
Vertical finger jointing with horizontal spindle.

Feed rate	Depending on the spindle RPM, no. of wings, workpiece material and condition of the minifinger tooling cutting edges.
Workpiece materials	Coniferous wood and hardwood, softwood and hardwood, Exotic wood, glulam (limited).

Recommended cutting material

	HS	Marathon (MC)	HW
Coniferous wood soft	♦	♦	◇
Coniferous wood hard		♦	♦
Deciduous wood soft		♦	♦
Deciduous wood hard		◇	♦
Exotic wood		◇	♦
Glulam			◇

♦ suitable ◇ partly suitable

Joint types

Shoulder variations

Strips with continuous joint present an irregular glue line on the side of the profile. To give a straight line (seam), the fingers are profiled with shoulder cutters. The number of fingers is determined by the wood thickness and the shoulder width.

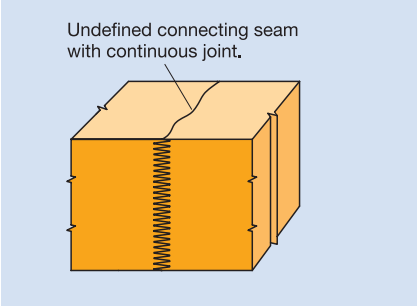

Continuous joint.

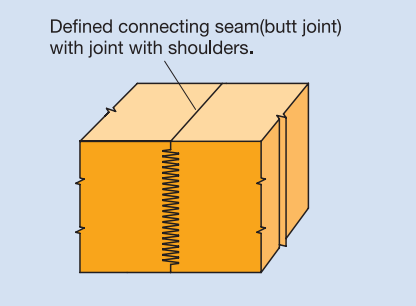

Joint with shoulders.

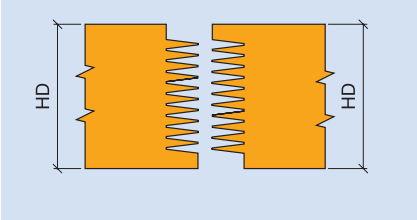

Profile 2: Staggered shoulders.

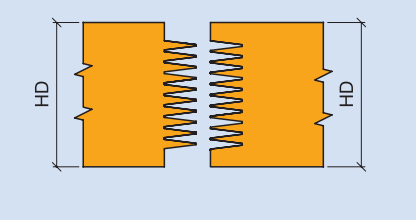

Profile 3: Level shoulders.

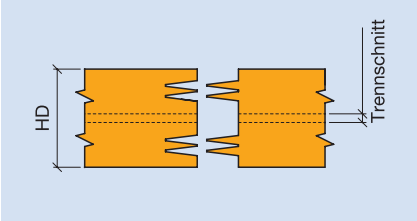

Profile 4: Shoulders for splitting.

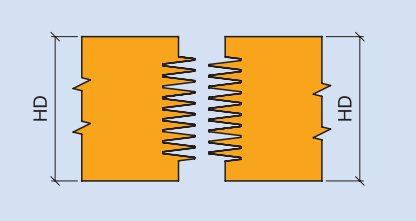

Profile 5: Shoulder centralised.

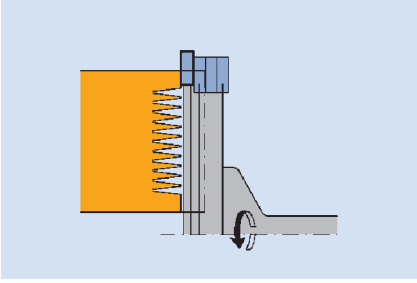

Hogger for trimming minifingers.

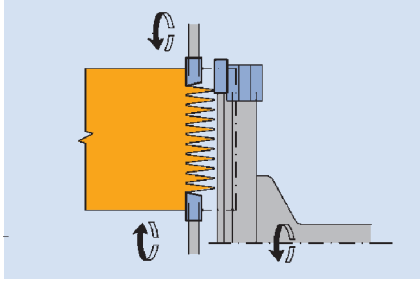

Hogger and scoring saw for trimming minifingers and scoring the butt joint.

The requirements for finger joints are defined in the standards DIN 68140 and EN 385 and EN 387.
Load group I (load-bearing components):
Multi-purpose finger joints for laminated panels BSH.
The components should be calculated according to DIN 1052. v ≤ 0.18.
Load group II:
Multi-purpose finger joints for construction timber (KVH).
Finger joints with shoulders also fall into this group. v ≤ 0.25.

Finger profiles

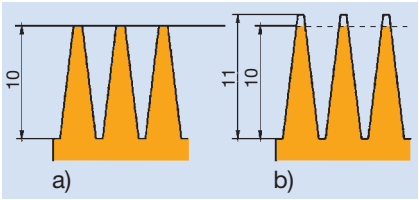

Minifinger profile
a – without cut-off, b – with cut-off

Finger length l mm	Finger pitch t mm	Width of finger tip b mm	Weakening degree v	Relativetip play s mm
10	3,8	0,60	0,16	0,30 – 0,50
15	3,8	0,42	0,11	0,45 – 0,75
20	5,0	0,50	0,10	0,60 – 1,00
20	6,2	1,00	0,16	0,60 – 1,00
30	6,2	0,60	0,10	0,90 – 1,50
50	12,0	2,00	0,17	1,50 – 2,50

Finger length 4 mm
Finger pitch 1.6 mm

Production of mouldings, glued panels in furniture, mitre joints for windows/doors, picture frames.

Finger length 6/7 mm
Finger pitch 2.8 mm

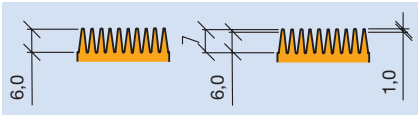

Wood finishing and residual wood for precise construction parts e.g. special window blanks, frieze strips, glued wood panels in furniture.
Reduced finger length to save wood. Tightly sealed finger profile feasible through the length determination of the fingers.

Finger length 10 mm
Finger pitch 3.8 mm

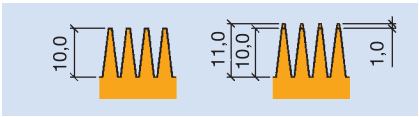

Wood finishing and wood residue recycling, lamellas for window blanks and glued panels in furniture. Finger length 10 mm to DIN 68140 (EN 385 and EN 387) for finger joints in coniferous wood for load bearing components. Finger joints present a visible tip play (S) after pressing.

Finger length 15 mm
Finger pitch 3.8 mm

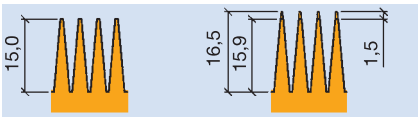

Wood finishing for BSH (laminated wood) and KVH (construction timber).
Finger joints in coniferous wood for high strength, load bearing components to DIN 68140 (EN 385 and EN 387), e.g. lamellas for laminated wood. These finger joints present a visible tip play (S) after pressing.

Finger length 20 mm
Finger pitch 6.2 mm

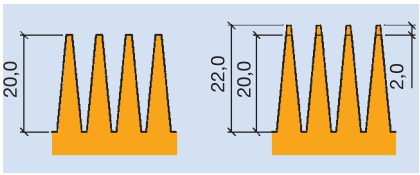

Wood finishing for laminated wood, mainly for construction timber, duo, trio and cross beams to DIN 68140, (EN 385 and EN 387) for finger joints in coniferous wood for high strength, load bearing components, e.g. lamellas for laminated wood.
These finger joint present a visible tip play (S) after pressing. Because of the greater pitch the finger seam is more visible and stability lower.

Finger length 20 mm
Finger pitch 5.0 mm

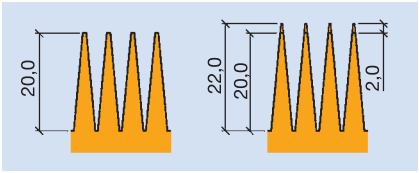

Wood finishing for laminated wood and KVH construction timber to DIN 68140 (EN 385 and 387) for finger joints in coniferous wood for high strength, load bearing components, e.g. lamellas for laminated wood, KVH, formwork beams. These finger joints show a visible gap after pressing.
Finger profile with higher stability than the fingers with 6.2 mm pitch. Advantage compared to ZL 15 mm: Because of greater pitch, the wood finger is more stable and easier to join together.

Enquiry - Checklist for minifinger tools

Customer details: Customer number (if known) ☐☐☐☐☐☐☐☐

☐ Enquiry
☐ Order

Delivery date: (not binding) ☐☐ KW

Company:

Street:

Post code/place:

Country:

Phone/fax:

Contact person:

Signature:

Date:

Enquiry/order no.:

Tool Id: (if known)

No.of pieces:

Application:

☐ Vertical finger jointing
☐ Horizontal finger jointing

☐ Load bearing components
☐ Not load bearing components

Workpiece material:

Profile:
Wood thickness (mm):
Finger length (mm):
Finger pitch:

☐ With basic clearance
☐ Tightly fitting profile (only for not load bearing components)
☐ Continuous joint

With shoulder cutters

☐ Profile 2

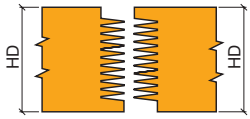

☐ Profile 3

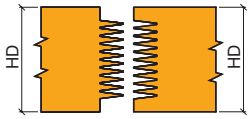

☐ Profile 5

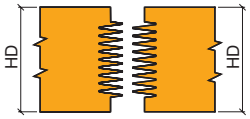

Machine:

Producer:
Type:

☐ One sided machine
☐ Horizontal spindle
☐ Continuous machine
☐ Machine cutting in stacks
Table width (mm):
☐ Feed speed

☐ Double sided machine
☐ Vertical spindle
_____ parts/min
_____ tables/min
_____ mm
_____ m/min

Tool:

	Cutter spindle	Cut-off device ☐	Scorer on top ☐	Scorer on bottom ☐
RPM (min^{-1}):				
Power (KW):				
Tool diam.(mm):				
Spindle diam.:				
Spindle length (mm):				
Hydro clamping:	☐			
Mounted on sleeve:	☐			
Flange diameter:				
Number of teeth:				

Adhesive:

Producer:
Type:

☐ Water-bases adhesive
☐ PU with fibre ☐ PU pure

WF 620 2/WF 620 2 06
Minifinger joint cutter

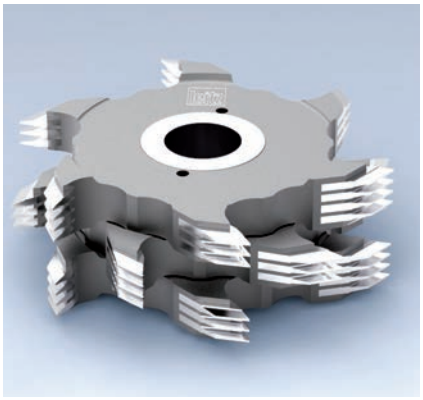

Minifinger joint cutters with straight cut, straight back relief, staggered profile teeth, secured against twisting by design of tool body. Solid and robust cutter design with individually embedded tips.

Table for allowed RPM n = min^{-1} in relation to finger length ZL an diameter D.
Zero-diameter D_0 in relation to finger length for adjustment of the machine spindles.

ZL mm	D mm	D_0 mm	$n_{max.}$ min^{-1}
10	160	140	9,000
6	160	148	9,000
15	170	140	8,500
20	180	140	8,000
10	250	230	6,200
15	260	230	6,000
20	260	220	6,000

Application

For self-locking longitudinal joints for all kinds "in load bearing" components and window blanks with continuous finger joint.

Cutting material

HS, Marathon (MC) and HW.

Resharpening area

12 mm.

Feed rate

Depending on RPM up to 24 m min^{-1}.

Minifinger joint cutter pitch 1.6 mm
Standard cutting width
Minifinger joint cutter WF 620 2
Finger length = 4 mm
D = 160 mm
Finger pitch 1.6 mm

Table to determine the number of cutters for a given wood thickness and cutting width.

SB	25.0 mm
Hub	24.0 mm
No. of fingers	Wing row ZA 15
Wood thickness	No. of cutters
23	1
47	2
71	3
95	4
119	5

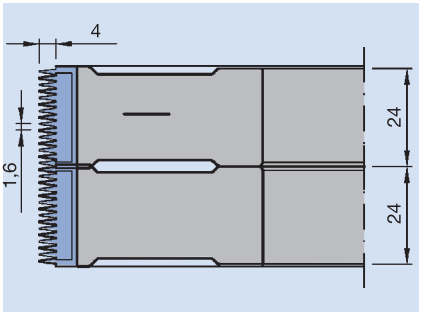

Minifinger joint cutter
WF 620 2/WF 620 06
Standard minifinger joint cutter
Finger length 10 mm and 15 mm
D = 160/250 mm 170/260 mm
Finger pitch = 3.8 mm

Minifinger joint cutter
WF 620 2/WF 620 06
Standard minifinger joint cutter
Finger length 20 mm
D = 180/260 mm
Finger pitch = 6.2 mm

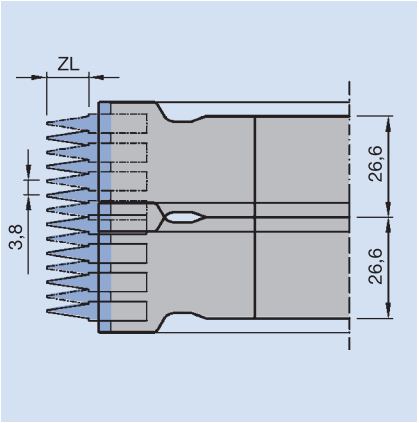

Minifinger joint cutter pitch 3.8 mm, finger length 10 or 15 mm.

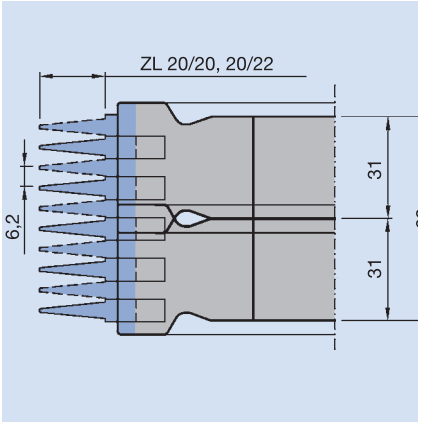

Minifinger joint cutter pitch 6.2 mm.

Minifinger joint cutter with pitch of 3.8 mm

SB	28.6 mm
Hub	26.6 mm
ZA	Tooth row ZA 7
Wood thickness	Number of cutters
24	1
51	2
77	3
104	4
131	5
157	6
184	7
210	8
237	9
264	10
290	11
317	12

Minifinger joint cutter with pitch of 6.2 mm

SB	33.0 mm
Hub	31.0 mm
ZA	Tooth row ZA 5
Wood thickness	Number of cutters
28	1
59	2
90	3
121	4
152	5
183	6
214	7
245	8
278	9
397	10
338	11

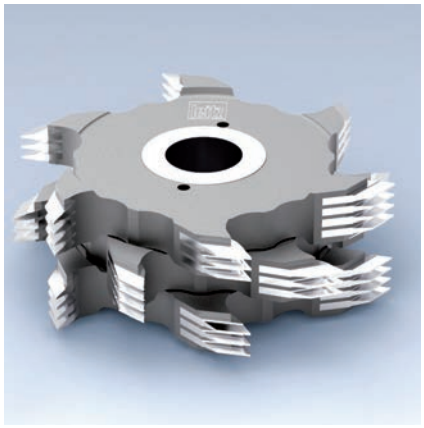



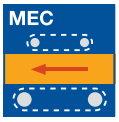







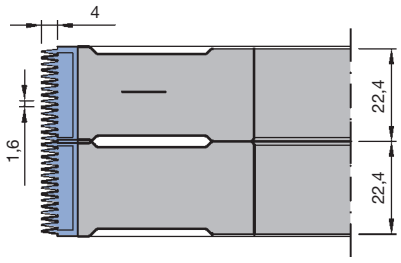

Minifinger joint cutter ZL 4 mm, TG 1.6 mm

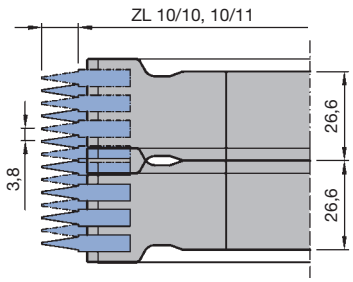

Minifinger joint cutter ZL 10 mm, TG 3.8 mm

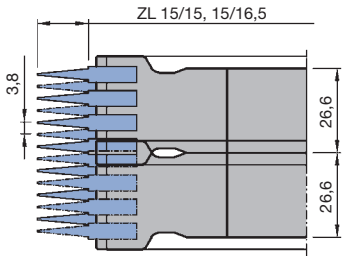

Minifinger joint cutter ZL 15 mm, TG 3.8 mm

Minifinger joint cutter, HS

Application:
For self-locking longitudinal joints. See section introduction for additional information.

Machine:
Finger joint machines with/without cut-off saw, continuous machines.

Workpiece material:
Softwood, across grain; limited suitability for hardwood.

Technical information:
Reduced risk of breakage from individually brazed finger cutting edges. Cutting material HS. Resharpening area 12 mm.

ZL 4 mm, TG 1.6 mm
WF 620 2

D mm	SB mm	ND mm	BO mm	Z	ZA PCS	QAL	ZL mm	ID
160	25	22,4	50	2/2	15	HS	4	**021543** ●

ZL 10 mm, TG 3.8 mm
WF 620 2

D mm	SB mm	ND mm	BO mm	Z	ZA STK	QAL	ID ZL 10/10	ID ZL 10/11
160	28,6	26,6	50	2/2	7	HS	**021685** ●	**021689** ●
160	28,6	26,6	50	3/3	7	HS	**120313** □	**021692** ●
250	28,6	26,6	50	3/3	7	HS	**021688** □	**021693** ●
250	28,6	26,6	50	4/4	7	HS	**120316** □	**120318** □

ZL 15 mm, TG 3.8 mm
WF 620 2

D mm	SB mm	ND mm	BO mm	Z	ZA STK	QAL	ID ZL 15/15	ID ZL 15/16,5
170	28,6	26,6	50	2/2	7	HS	**021694** ●	**021696** ●
260	28,6	26,6	50	3/3	7	HS	**021695** □	**021697** ●
260	28,6	26,6	80	4/4	7	HS	**120420**	**120422**

ZL 15 mm, TG 3.8 mm, for application with PU glue
WF 620 2

D mm	SB mm	ND mm	BO mm	Z	ZA STK	QAL	ID ZL 15/15	ID ZL 15/16,5
170	28,6	26,6	50	2/2	7	HS	**120412** ●	**120414** □
260	28,6	26,6	50	3/3	7	HS	**120413** □	**120415** □
260	28,6	26,6	80	4/4	7	HS	**120421**	**120423**

● available ex stock
□ available at short notice
Instruction manual visit www.leitz.org

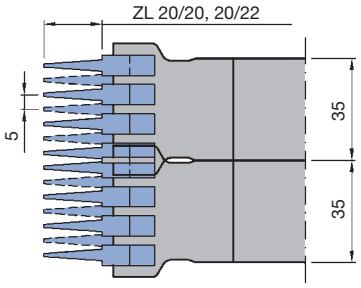

Minifinger joint cutter ZL 20 mm, TG 5.0 mm

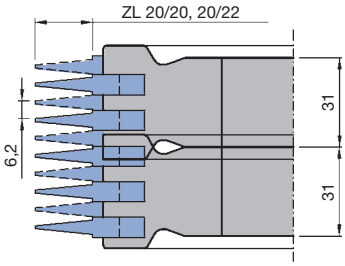

Minifinger joint cutter ZL 20 mm, TG 6.2 mm

ZL 20 mm, TG 5.0 mm
WF 620 2

D mm	SB mm	ND mm	BO mm	Z	ZA STK	QAL	ID ZL 20/20	ID ZL 20/22
180	37	35	50	2/2	7	HS	**021729** ●	**021730** □

ZL 20 mm, TG 6.2 mm
WF 620 2

D mm	SB mm	ND mm	BO mm	Z	ZA STK	QAL	ID ZL 20/20	ID ZL 20/22
180	33	31	50	2/2	5	HS	**021668** ●	**021669** ●
260	33	31	50	3/3	5	HS	**021674** □	**021670** □
260	33	31	80	4/4	5	HS	**120525**	**120527**

ZL 20 mm, TG 6.2 mm, for application with PU glue
WF 620 2

D mm	SB mm	ND mm	BO mm	Z	ZA STK	QAL	ID ZL 20/20	ID ZL 20/22
180	33	31	50	2/2	5	HS	**120515** ●	**120516** ●
260	33	31	50	3/3	5	HS	**120510** □	**120511** □
260	33	31	80	4/4	5	HS	**120524**	**120526**

● available ex stock
□ available at short notice
Instruction manual visit www.leitz.org

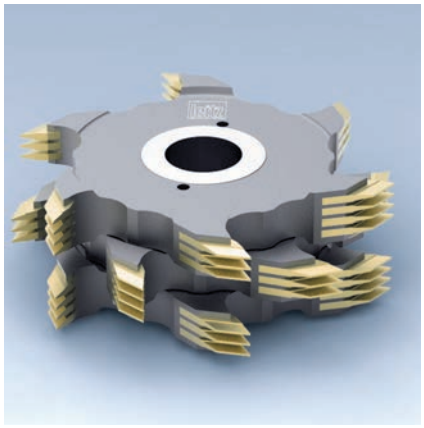









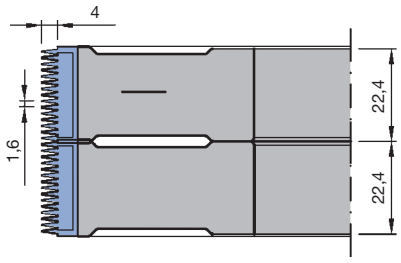

Minifinger joint cutter ZL 4 mm, TG 1.6 mm

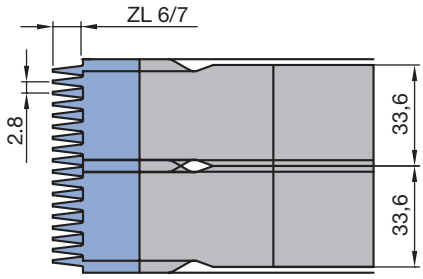

Minifinger joint cutter ZL 6/7 mm, TG 2.8 mm

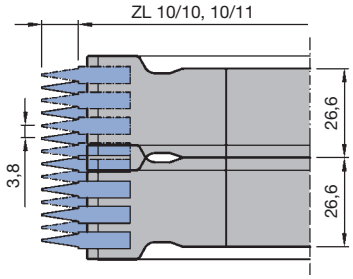

Minifinger joint cutter ZL 10 mm, TG 3.8 mm

Minifinger joint cutter, Marathon

Application:
For self-locking longitudinal joints. See section introduction for additional information.

Machine:
Finger joint machines with/without cut-off saw, continuous machines.

Workpiece material:
Softwood, across grain; also suitable for hardwood.

Technical information:
Reduced risk of breakage from individually brazed finger cutting edges. Marathon coating allows up to 4 times longer tool life compared to HS version. Resharpening area 12 mm (or 6 mm for ID **123005** and 8 mm for ID **123102**).

ZL 4/5 mm, TG 1.6 mm
WF 620 2 06

D mm	SB mm	ND mm	BO mm	Z	ZA PCS	QAL	ZL mm	ID
160	25	22.4	50	2/2	15	MC	4/5	**123003**
250	25	22.4	50	3/3	15	MC	4/5	**123004**
250	25	22.4	50	6/6	15	MC	4/5	**123005** ●

ZL 6/7 mm, TG 2.8 mm
WF 620 2 06

D mm	SB mm	ND mm	BO mm	Z	ZA PCS	QAL	ZL mm	ID
160	34	33,6	50	3/3	12	MC	6/7	**123100** ●
250	34	33,6	50	4/4	12	MC	6/7	**123101** ●
250	34	33,6	50	6/6	12	MC	6/7	**123102** ●

ZL 10 mm, TG 3.8 mm
WF 620 2 06

D mm	SB mm	ND mm	BO mm	Z	ZA STK	QAL	ID ZL 10/10	ID ZL 10/11
160	28,6	26,6	50	2/2	7	MC	**120608** ●	**120612** ●
160	28,6	26,6	50	3/3	7	MC	**120616** □	**120617** □
250	28,6	26,6	50	3/3	7	MC	**120609** □	**120613** ●
250	28,6	26,6	50	4/4	7	MC	**120620** □	**120622** ●

● available ex stock
□ available at short notice
Instruction manual visit www.leitz.org

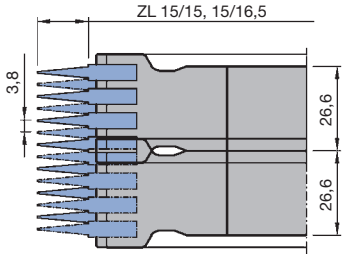

Minifinger joint cutter ZL 15 mm, TG 3.8 mm

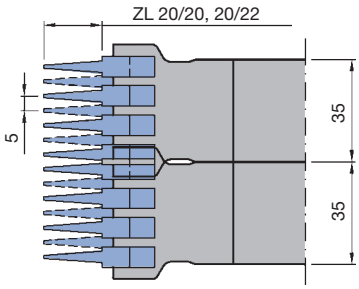

Minifinger joint cutter ZL 20 mm, TG 5.0 mm

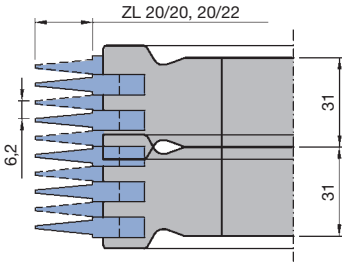

Minifinger joint cutter ZL 20 mm, TG 6.2 mm

ZL 15 mm, TG 3.8 mm
WF 620 2 06

D mm	SB mm	ND mm	BO mm	Z	ZA STK	QAL	ID ZL 15/15	ID ZL 15/16,5
170	28,6	26,6	50	2/2	7	MC	**120709** ●	**120713** ●
260	28,6	26,6	50	3/3	7	MC	**120710** □	**120714** ●
260	28,6	26.6	80	4/4	7	MC	**120721**	**120723**

ZL 15 mm, TG 3.8 mm, for application with PU glue
WF 620 2 06

D mm	SB mm	ND mm	BO mm	Z	ZA STK	QAL	ID ZL 15/15	ID ZL 15/16,5
170	28,6	26,6	50	2/2	7	MC	**120711** ●	**120715** □
260	28,6	26,6	50	3/3	7	MC	**120712** □	**120716** □
260	28,6	26.6	80	4/4	7	MC	**120722**	**120724**

ZL 20 mm, TG 5.0 mm
WF 620 2 06

D mm	SB mm	ND mm	BO mm	Z	ZA STK	QAL	ID ZL 20/20	ID ZL 20/22
180	37	35	50	2/2	7	MC	**120818** □	**120820** □
260	37	35	50	3/3	7	MC	**120819** □	**120821** □

ZL 20 mm, TG 6.2 mm
WF 620 2 06

D mm	SB mm	ND mm	BO mm	Z	ZA STK	QAL	ID ZL 20/20	ID ZL 20/22
180	33	31	50	2/2	5	MC	**120810** ●	**120814** □
260	33	31	50	3/3	5	MC	**120811** □	**120815** □
260	33	31	80	4/4	5	MC	**120834**	**120836**

ZL 20 mm, TG 6.2 mm, for application with PU glue
WF 620 2 06

D mm	SB mm	ND mm	BO mm	Z	ZA STK	QAL	ID ZL 20/20	ID ZL 20/22
180	33	31	50	2/2	5	MC	**120812** ●	**120816** □
260	33	31	50	3/3	5	MC	**120813** □	**120817** □
260	33	31	80	4/4	5	MC	**120835**	**120837**

● available ex stock
□ available at short notice
Instruction manual visit www.leitz.org

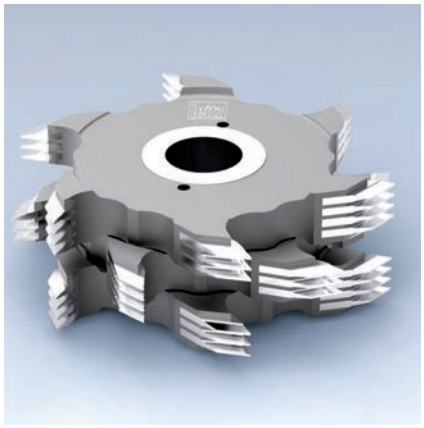



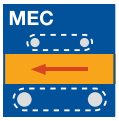







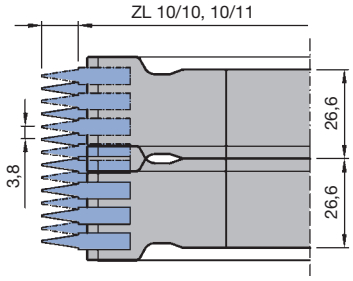

Minifinger joint cutter ZL 10 mm, TG 3.8 mm

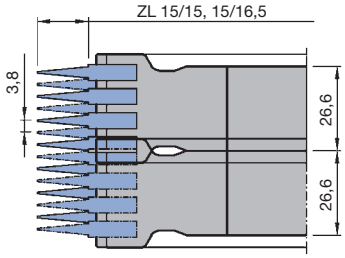

Minifinger joint cutter ZL 15 mm, TG 3.8 mm

Minifinger joint cutter, HW

Application:
For self-locking longitudinal joints. See section introduction for additional information.

Machine:
Finger joint machines with/without cut-off saws, continuous machines.

Workpiece material:
Hardwood, across grain.

Technical information:
Reduced risk of breakage from individually brazed finger cutting edges. Cutting material HW. Resharpening area 12 mm.

ZL 10 mm, TG 3.8 mm
WF 620 2

D mm	SB mm	BO mm	Z	ZA STK	QAL	n_{max} min^{-1}	ID ZL 10/10	ID ZL 10/11
160	28,6	50	2/2	7	HW	8000	**021600** ●	**021601** ●
160	28,6	50	3/3	7	HW	8000	**021604** □	**021603** ●
250	28,6	50	3/3	7	HW	6000	**021605** □	**021602** ●

ZL 15 mm, TG 3.8 mm
WF 620 2

D mm	SB mm	BO mm	Z	ZA STK	QAL	n_{max} min^{-1}	ID ZL 15/15	ID ZL 15/16,5
170	28,6	50	2/2	7	HW	8000	**021644**	**021645** ●
260	28,6	50	3/3	7	HW	6000	**021652**	**021648**

Table to determine the number of cutters for a given wood thickness.
Finger length 10 and 15 mm;
D = 160/250 mm and 170/260 mm
Finger pitch = 3.8 mm

SB	28.6 mm
Hub	26.6 mm
ZA	Tooth row ZA 7
Wood thickness	Quantity cutter
24	1
51	2
77	3
104	4
131	5
157	6
184	7
210	8
237	9
264	10
290	11
317	12

● available ex stock
□ available at short notice
Instruction manual visit www.leitz.org

High performance minifinger joint cutters, real Z 4

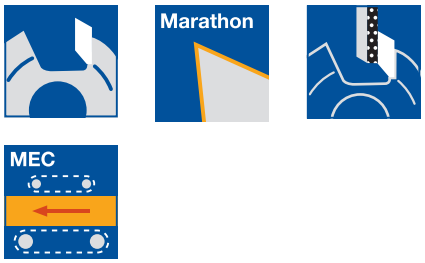

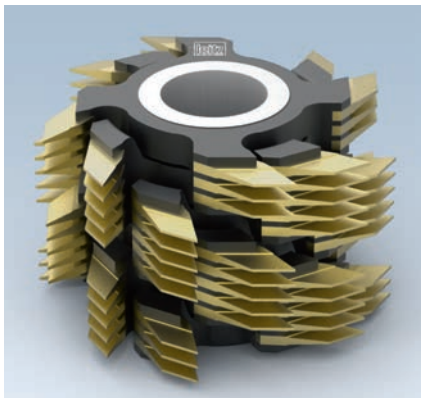

Application	For self-locking finger joints for supporting and load bearing components on high performance finger joint machines.
Machines	High performance finger joint machines with/without cut-off saw.
Workpiece material	Solid woods across grain.
Number of wings	Real Z 4.
Cutting material	HS and Marathon (MC).
Tool design	Solid steel tool body design with individually brazed finger knives. Higher number of wings for higher feed speeds and improved joint cut quality.
Feed	MEC.
Resharpening area	12 mm.
Particular benefit	A tool set, comprising of basic, top and bottom cutters for the required working width/height. The spiral knife arrangement reduces the power consumption and noise.

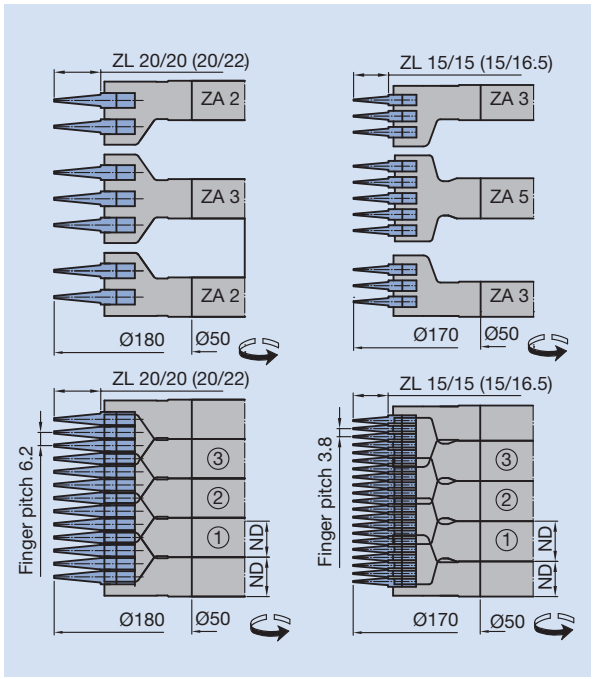

Minifinger joint cutter combinations with the finger lengths 10, 15 and 20 mm.

High performance minifinger joint cutters, real Z 6

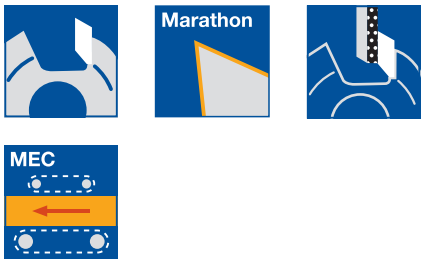



Application	For self-locking finger joints for supporting and load bearing components for high performance finger joint machines.
Machines	High performance finger joint machines with/without cut-off saw.
Workpiece material	Solid woods across grain.
Number of wings	Real Z 6, for ZL 10 mm D = 250.
Cutting material	HS and Marathon (MC).
Tool design	Solid steel tool body with individually brazed finger knives. High number of wings for higher feed speeds and improved joint cut quality.
RPM	n_{max} = 6,000 min^{-1}.
Feed	MEC.
Resharpening area	12 mm.
Particular benefit	A tool set, comprising basic, top and bottom cutters for the required working width/height. The spiral knife arrangement reduces the power consumption and noise.

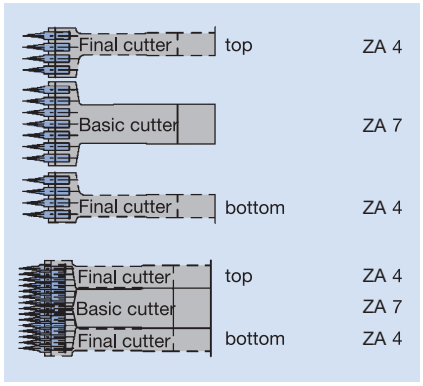

Combination for high performance minifinger joint cutter set Z 6.

Table to determining the number of minifinger joint cutters with finger pitch of 3.8 mm.

Finger length 10 and 15 mm Real Z6			**TG 3.8 mm**	
		Basic cutter	Final cutter top	Final cutter bottom
Tooth row	ZA	7	4	4
Hub thickness	ND	26.6 mm	19 mm	19 mm
Wood thickness HD	Clamping height KLH	Number of cutters	Number of cutters	Number of cutters
27	38	0	1	1
53	64.6	1	1	1
80	91.2	2	1	1
106	117.8	3	1	1
133	144.4	4	1	1
160	171	5	1	1
186	197.6	6	1	1
213	224.2	7	1	1
239	250.8	8	1	1
266	277.4	9	1	1
293	304	10	1	1

High performance minifinger joint cutters, real Z 6

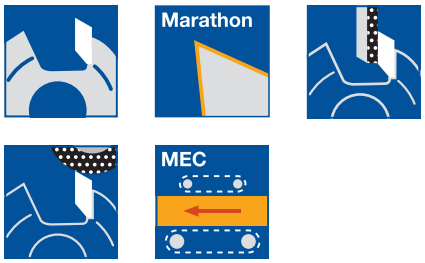

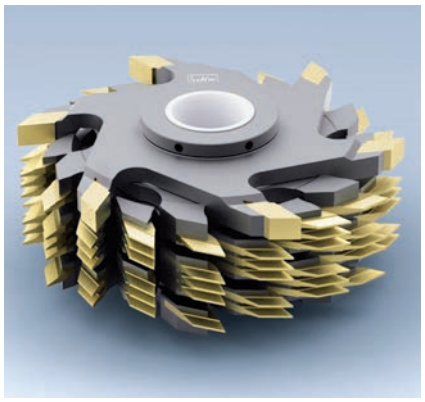

Application	For self-locking finger joints for load bearing components with shoulder cuts for high performance finger joint machines.
Machines	High performance finger joint machines with cut-off saw.
Workpiece material	Solid woods across grain.
Number of wings	Real Z 6 for D = 260 mm.
Cutting material	HS and Marathon (MC).
Tool design	Solid steel tool body with individually brazed finger cutters. High number of wings for higher feed speeds and improved joint cut quality.
RPM	n_{max} = 6,000 min^{-1}.
Feed	MEC.
Resharpening area	12 mm.
Particular benefit	A tool set, comprising of basic, top and bottom shoulder cutters and shoulder cut for the required working width/height. The spiral arranged wings reduces the power consumption and noise.

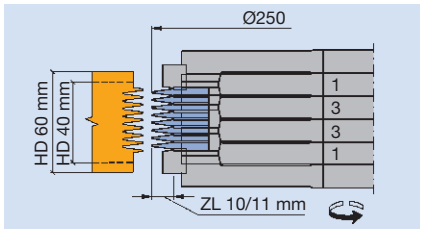

Minifinger joint cutter set real Z 6.
Shoulder cutters central, profile 5.

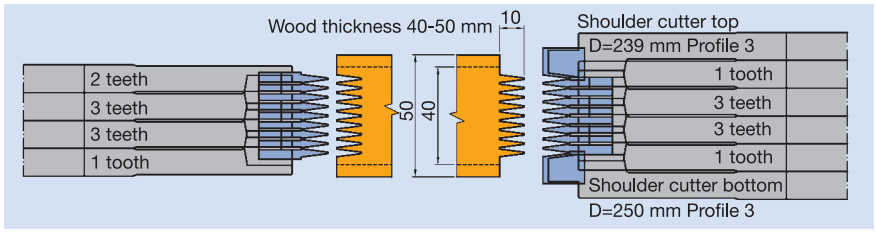

Minifinger joint cutter set real Z 6, shoulder cutters in gap.

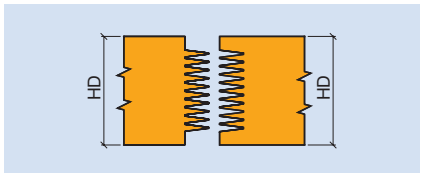

Profile 3

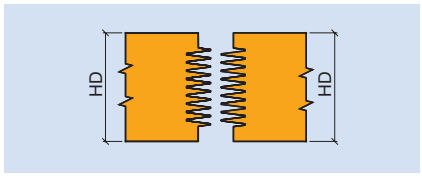

Profile 5

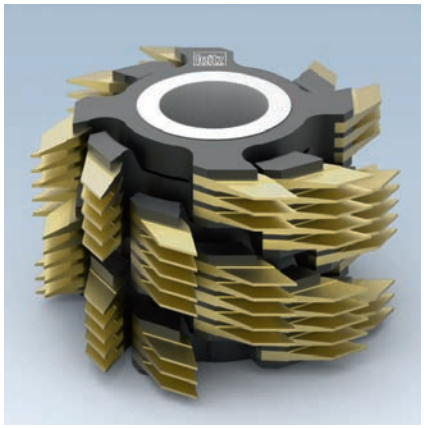



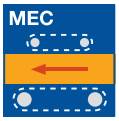







ZL 15/15 (15/16,5)
ZL 10/10 (10/11)

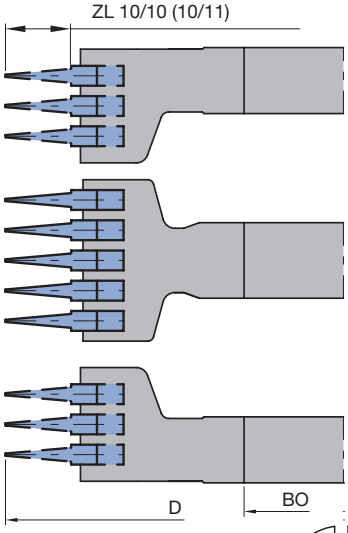

Finger pitch 3.8 mm

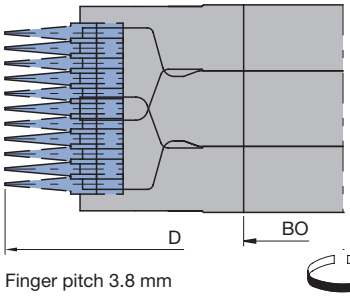

Finger pitch 3.8 mm

Minifinger joint cutter, Marathon, real Z 4

Application:
For self-locking longitudinal joints. See section introduction for additional information.

Machine:
High performance finger joint machines with/without cut-off saws.

Workpiece material:
Softwood, across grain; also suitable for hardwood.

Technical information:
High number of teeth tool design, top and bottom final cutters required. Assembly of tool set: see section introduction. Marathon coating allows up to 4 times longer tool life compared to HS version. Resharpening area 12 mm.

ZL 15 mm, TG 3.8 mm
WF 620 2 06, WF 623 2 06

Art	D mm	SB mm	ND mm	BO mm	Z	ZA STK	QAL	ID ZL 15/15	ID ZL 15/16,5
Top final cutter	170	20,2	16,6	50	4	3	MC	**121700** □	**121704** □
Basic cutter	170	35,4	19,0	50	4	5	MC	**120705** □	**120707** □
Bottom final cutter	170	20,2	16,6	50	4	3	MC	**121701** □	**121705** □

ZL 15 mm, TG 3.8 mm, for application with PU glue
WF 620 2 06, WF 623 2 06

Art	D mm	SB mm	ND mm	BO mm	Z	ZA STK	QAL	ID ZL 15/15	ID ZL 15/16,5
Top final cutter	170	20,2	16,6	50	4	3	MC	**121702** ●	**121706** □
Basic cutter	170	35,4	19,0	50	4	5	MC	**120706** ●	**120708** □
Bottom final cutter	170	20,2	16,6	50	4	3	MC	**121703** ●	**121707** □
Top final cutter	200	20,2	16,6	70	4	3	MC	**121708**	**121710**
Basic cutter	200	35,4	19	70	4	5	MC	**120725**	**120726**
Bottom final cutter	200	20,2	16,6	70	4	3	MC	**121709**	**121711**

Finger length 10 and 15 mm
TG: 3,8 mm
Real Z4

		Basic cutter	Final cutter top	Final cutter bottom
ZA		5	3	3
ND		19	16,6	16,6
HD	KLH	Cutter quantity	Cutter quantity	Cutter quantity
19	33,2	0	1	1
38	52,2	1	1	1
57	71,2	2	1	1
76	90,2	3	1	1
95	109,2	4	1	1
114	128,2	5	1	1
133	147,2	6	1	1
152	166,2	7	1	1
171	185,2	8	1	1
190	204,2	9	1	1
209	223,2	10	1	1
228	242,2	11	1	1
247	261,2	12	1	1
266	280,2	13	1	1
285	299,2	14	1	1
304	318,2	15	1	1
323	337,2	16	1	1

HD = wood thickness
KLH = clamping height

● available ex stock
□ available at short notice
Instruction manual visit www.leitz.org

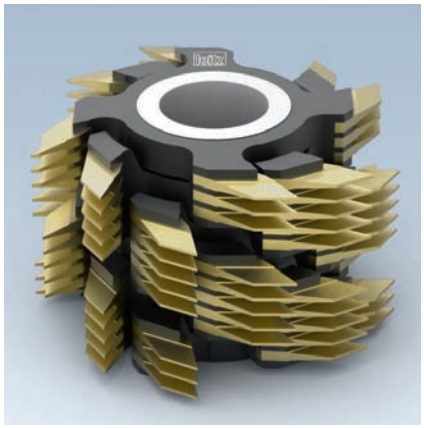



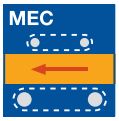







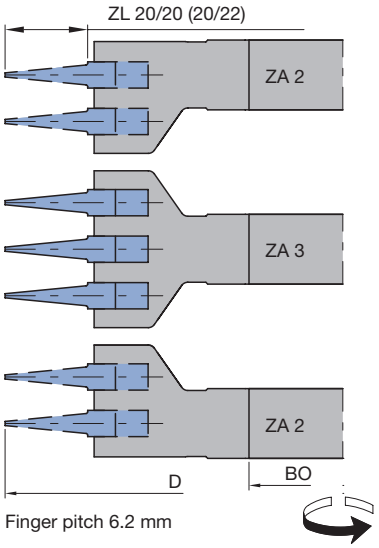

Finger pitch 6.2 mm

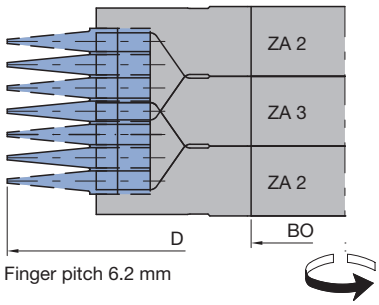

Finger pitch 6.2 mm

Minifinger joint cutter, Marathon, real Z 4

Application:
For self-locking longitudinal joints. See section introduction for additional information.

Machine:
High performance finger joint machines with/without cut-off saws.

Workpiece material:
Softwood, across grain; also suitable for hardwood.

Technical information:
High number of teeth tool design, top and bottom final cutters required. Assembly of tool set: see section introduction. Marathon coating allows up to 4 times longer tool life compared to HS version. Resharpening area 12 mm.

ZL 20 mm, TG 6.2 mm
WF 623 2 06

Art	D mm	SB mm	ND mm	BO mm	Z	ZA STK	QAL	ID ZL 20/20	ID ZL 20/22
Top final cutter	180	18,6	18,6	50	4	2	MC	**121808**	**121810**
Basic cutter	180	31	18,6	50	4	3	MC	**120838**	**120840**
Bottom final cutter	180	18,6	18,6	50	4	2	MC	**121812**	**121814**

ZL 20 mm, TG 6.2 mm, for application with PU glue
WF 623 2 06

Art	D mm	SB mm	ND mm	BO mm	Z	ZA STK	QAL	ID ZL 20/20	ID ZL 20/22
Top final cutter	180	18,6	18,6	50	4	2	MC	**121809**	**121811**
Basic cutter	180	31	18,6	50	4	3	MC	**120839**	**120841**
Bottom final cutter	180	18,6	18,6	50	4	2	MC	**121813**	**121815**

Finger length 20 mm
TG: 6,2 mm
Real Z3

		Basic cutter	Final cutter top	Final cutter bottom
ZA		3	2	2
ND		18,6	18,6	18,6
HD	KLH	Cutter quantity	Cutter quantity	Cutter quantity
19	37,2	0	1	1
37	55,8	1	1	1
56	74,4	2	1	1
74	93	3	1	1
93	111,6	4	1	1
112	130,2	5	1	1
130	148,8	6	1	1
149	167,4	7	1	1
167	186	8	1	1
186	204,6	9	1	1
205	223,2	10	1	1
223	241,8	11	1	1
242	260,4	12	1	1
260	279	13	1	1
279	297,6	14	1	1
298	316,2	15	1	1
316	334,8	16	1	1

HD = wood thickness
KLH = clamping height





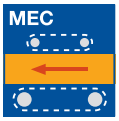







Minifinger joint cutter, Marathon, real Z 6

Application:
For self-locking longitudinal joints. See section introduction for additional information.

Machine:
High performance finger joint machines with/without cut-off saws.

Workpiece material:
Softwood, across grain; also suitable for hardwood.

Technical information:
High number of teeth tool design, top and bottom final cutters required. Assembly of tool set: see section introduction. Marathon coating allows up to 4 times longer tool life compared to HS version. Resharpening area 12 mm.

ZL 10 mm, TG 3.8 mm
WF 620 2 06, WF 623 2 06

Tool Type	D mm	SB mm	ND mm	BO mm	Z	ZA PCS	QAL	ZL mm	ID
Top final cutter	250	26,6	19	50	6	4	MC	10/11	**121012** ●
Basic cutter	250	49,4	26,6	50	6	7	MC	10/11	**120601** ●
Bottom final cutter	250	26,6	19	50	6	4	MC	10/11	**121013** ●

Finger length 10 mm and 15 mm
TG: 3,8 mm
Real Z6

		Basic cutter	Final cutter top	Final cutter bottom
ZA		7	4	4
ND		26,6	19	19
HD	KLH	Cutter quantity	Cutter quantity	Cutter quantity
27	38	0	1	1
53	64,6	1	1	1
80	91,2	2	1	1
106	117,8	3	1	1
133	144,4	4	1	1
160	171	5	1	1
186	197,6	6	1	1
213	224,2	7	1	1
239	250,8	8	1	1
266	277,4	9	1	1
293	304	10	1	1

HD = wood thickness
KLH = clamping height

● available ex stock
□ available at short notice
Instruction manual visit www.leitz.org





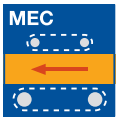







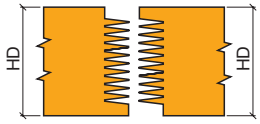

Profile 2

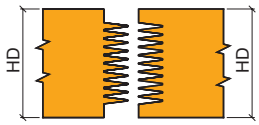

Profile 3

Minifinger joint cutter and shoulder cutter, Marathon, real Z 6

Application:
For self-locking longitudinal joints with straight visible joint for horizontal joints, e.g. solid wood panels or finger jointed profile strips. See section introduction for additional information.

Machine:
High performance finger joint machines with cut-off saw.

Workpiece material:
Softwood, across grain; also suitable for hardwood.

Technical information:
High number of teeth tool design. Tool set consists of basic cutter, extension cutter and shoulder cutters for different positions of the visible joint. Cutting width adjusted to wood thickness. Mounted on clamping sleeve. Marathon coating allows up to 4 times longer tool life compared to HS version. Resharpening area 12 mm.

Basic / extension cutter ZL 10/11 mm, TG 3.8 mm
WF 620 2 06, WF 623 2 06

Tool Type	D mm	SB mm	ND mm	BO mm	Z	ZA PCS	QAL	DRI	ID
Basic cutter	250	20,2	11,2	60	6	3	MC	RH	**120624** □
Extension cutter	250	5,0	11,2	60	6	1	MC	LH	**121608** □
Extension cutter	250	5,0	11,2	60	6	1	MC	RH	**121609** □
Extension cutter	250	12,6	11,2	60	6	2	MC	LH	**121610** □
Extension cutter	250	12,6	11,2	60	6	2	MC	RH	**121611** □

Shoulder cutter profile 2 and 3 for ZL 10/11 mm, TG 3.8 mm
WF 621 2 06

D mm	SB mm	BO mm	Z	QAL	ID LH	ID RH
249,7	12	60	6	MC	**122400** □	**122401** □

Clamping sleeve with threaded nut for LH/RH rotation
TB 270 0

d mm	BO mm	NL mm	GL mm	ID
60	50	85	105	**029474** ●
60	50	120	140	**029475**
60	50	150	170	**029476**
60	50	180	200	**029477**
60	50	210	230	**029478**
60	50	240	260	**029479**

Spacer
TR 100 0

D mm	B mm	BO mm	ID
90	3,8	60	**028447** ●
90	11,4	60	**028448** ●

● available ex stock
□ available at short notice
Instruction manual visit www.leitz.org

WM 620 2 01 Minifinger cutterhead

Minifinger cutterhead with resharpenable minifinger turnblade knives.
Wood thickness max. 60 mm adjustable with or without shoulders.
The resharpenable turnblade knives and the replaceable finger knives guarantee high flexibility and economic efficiency.
Knives are resharpened on standard multi-purpose sharpening machines with cooling.



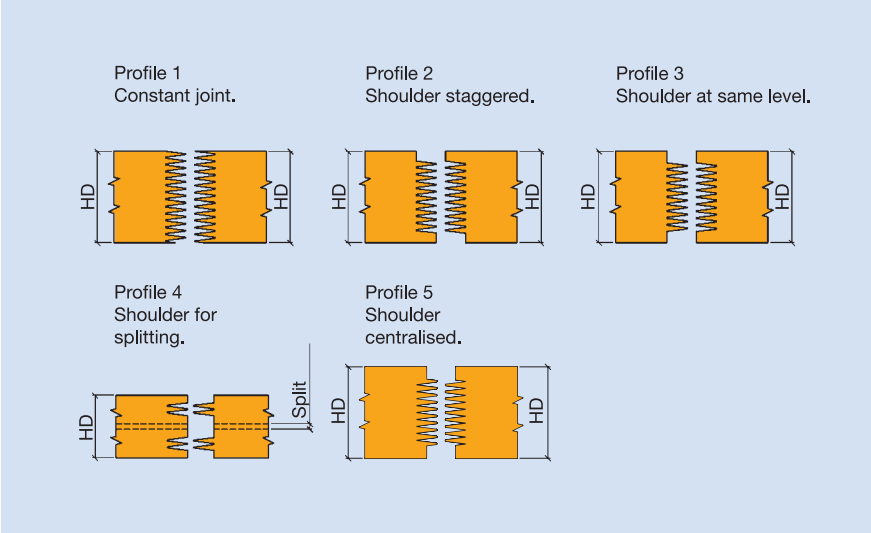

Application	For self-locking longitudinal joints for panel and moulding production with or without shoulders.
Machines	Double-end tenoners, double sided finger jointing lines with cut-off saw, single sided finger jointing lines with cut-off saw.
Cutting material	HW.
Resharpening area	2 x 6 mm.
Number of teeth/finger length	Z 6 or 3 + 3 at D = 250 mm , 10/11 mm finger length. Z 4 or 2 + 2 at D = 160 mm, 10/11 mm finger length.
Feed rate	Up to 36 m min^{-1}, depending on spindle RPM and cutting edge arrangement.

Note
For wood up to 60 mm thick: joints with/ without shoulders. Positioning the shoulder knives in 3.8 mm steps enables adjustment to different wood thicknesses.

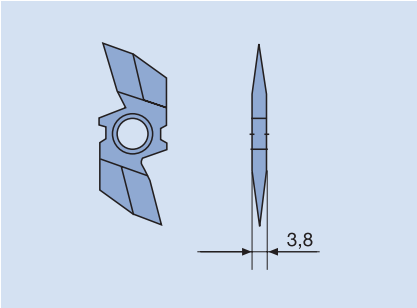

Minifinger knife, 2 edges.

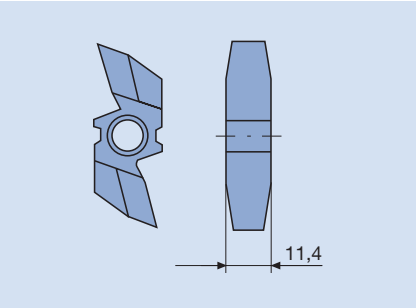

Shoulder knife, 2 edges.

Table to determination of required number of spare knives:

HD from-to mm	ZB mm	ZA	Half shoulder (HS) mm
16 – 22	9.4	3	3.3 – 6.3
19 – 25	13.2	4	2.9 – 5.9
23 – 29	17	5	3.0 – 6.0
27 – 33	20.8	6	3.1 – 6.1
31 – 37	24.6	7	3.2 – 6.2
35 – 41	28.4	8	3.3 – 6.3
38 – 44	32.2	9	2.9 – 5.9
42 – 48	36	10	3.0 – 6.0
46 – 52	39.8	11	3.1 – 6.1
50 – 56	43.6	12	3.2 – 6.2

HD from-to mm	ZB mm	ZA	Half shoulder (S) mm
17 – 23	10.7	3	
21 – 27	14.5	4	3.2 – 6.2
25 – 31	18.3	5	3.3 – 6.3
29 – 35	22.1	6	3.4 – 6.4
33 – 39	25.9	7	3.5 – 6.5
36 – 42	29.7	8	3.1 – 6.1
40 – 46	33.5	9	3.2 – 6.2
44 – 50	37.3	10	3.3 – 6.3
48 – 54	41.1	11	3.4 – 6.4
52 – 58	44.9	12	3.5 – 6.5

Minifinger cutterhead Turbo Hawk

Resharpenable cutterhead system with individually replaceable HS circular knives. Production of different profiles with the same tool body. Flexible cutting edge arrangement with or without shoulders. Wood thickness to maximum 50 mm.



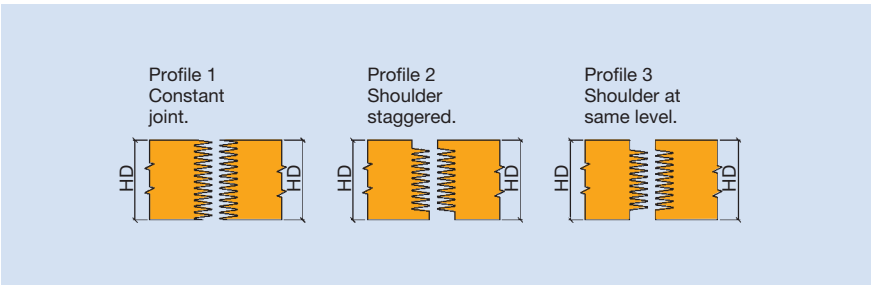

3.4 Finger jointing
3.4.3 Minifinger joint cutterheads

Application	For cutting self-locking longitudinal joints for exactly measured components, e.g. all kinds of finger joint profile moudlings, solid wood panels.
Machines	High performance finger jointing lines with cut-off saw.
Cutting material	HS, Marathon (MC).
Resharpening area	100 mm.
Number of teeth	Z 4 - Z 14
RPM	max. 6,000 min^{-1}
Advantages	Constant diameter tool system. Simple adjustment of knife sets with magnetic gauge. Flexible profile design for different timber thicknesses with or without shoulder knives. Consistent balancing quality by fixing the knives with keyway on the arbor. No contamination from grease due to closed hydraulic clamping system.
Note	Arbors can be fully equipped with knives or with gaps with spacers.

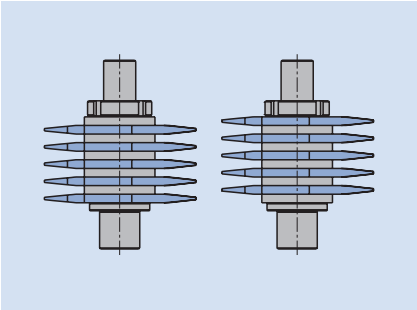

Arbor as change unit.
Knives mounted with spacer.

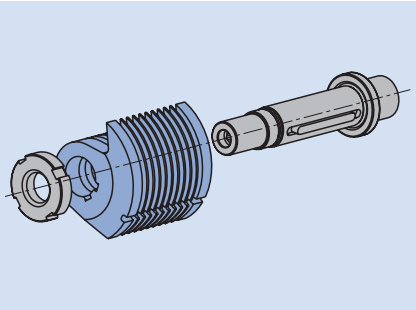

Knife mounting on the arbor.
Anti-twist keyway for the knives.





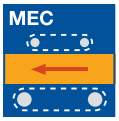









Profile 1 with continuous finger jointing



Profile 2 with staggered shoulder cutters



Profile 3 with shoulder cutters on the same level

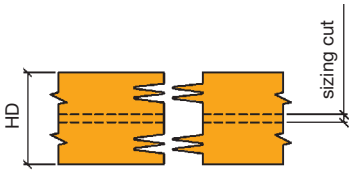

Profile 4 with shoulder cutters for splitting

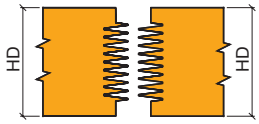

Profile 5 with half shoulder

Minifinger cutterhead with HW turnblade knives

Application:
For self-locking longitudinal joints for non-supporting components, e.g. panels and strips.

Machine:
Finger joint machines and continuous machines with cut-off saw.

Workpiece material:
Softwood and hardwood, across grain.

Technical information:
Steel tool body with HW turnblade knives. Particularly suitable for hardwood, e.g. for horizontal joints with and without shoulders. Variable design for defined wood thicknesses from 15 to 60 mm. The rest of the knife seating must be filled with spacers and a safety washer (spare part no. 4). Individual cutting edges can be replaced if a cutting edge breaks. Resharpening area 2 x 6 mm.

Profile 1, ZL 10/11 mm, TG 3.8 mm
WM 620 2 01

D mm	SB mm	BO mm	Z	HD mm	n_{max} min^{-1}	ID LH	ID RH
160	60	50	2/2	60	8000	**135001** □	**135000** □
250	60	50	3/3	60	5000	**135005** □	**135004** □

Attention: When assembling, always finish by fitting spacers with the securing device (spare part no. 4).

Tools for profile 2 - 5 on request.

Spare knives:

Part-no.	BEZ	P	ZL mm	SB mm	TG mm	QAL	ID
1	Minifinger knife		10/11	3,8	3,8	HW	**618002** ●
2	Shoulder knife	2, 3, 4	10/11	11,4	3,8	HW	**618005** ●
2	Shoulder knife	5	10/11	11,4	3,8	HW	**618006** ●

Spare parts:

Part-no.	BEZ	ABM mm	ID
3	Spacer for ZL 10/11	13x3,8x6,1	**008199** ●
3	Spacer	15x17x5	**008230** ●
4	Spacer with safety device	24,9x21x3,8	**008200**
4	Spacer with safety device	24,9x20x6,2	**008201** ●
5	Countersink screw, Torx® 20	M6x40	**006090** ●
5	Countersink screw, Torx® 20	M6x50	**007856** ●
5	Countersink screw, Torx® 20	M6x65	**007882** ●
5	Countersink screw, Torx® 20	M6x70	**007880** ●
	Torx® key	Torx® 20	**006091** ●

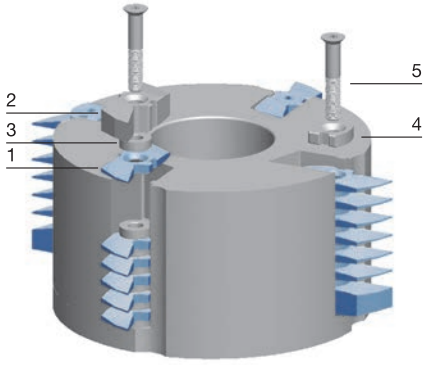

● available ex stock
□ available at short notice
Instruction manual visit www.leitz.org



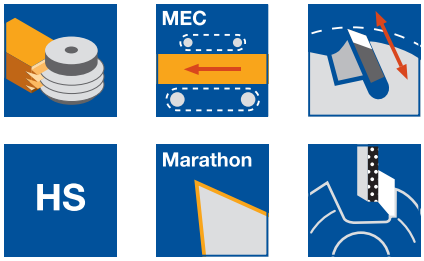



Profile 1 with continuous finger jointing



Profile 2 with staggered shoulder cutters



Profile 3 with shoulder cutters on the same level

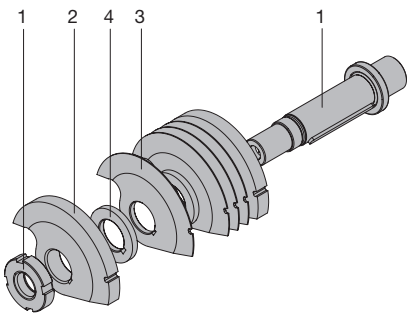

Hydro minifinger cutterhead TurboHawk with curved knives

Application:
For self-locking longitudinal joints for non-supporting components.

Machine:
High performance finger joint machines and continuous machines with cut-off saw.

Workpiece material:
Softwood; limited suitability for hardwood.

Technical information:
Resharpenable, constant diameter and constant profile tool system with hydro clamping. No machine adjustment required. Particularly suitable for horizontal joints with and without shoulders. Variable for defined wood thicknesses from 15 to 50 mm. The remaining knife seatings must be filled with spacers and a locking nut. Minifinger curved knives with extremely large resharpening area.

Hydro minifinger cutterhead with curved knives
HM 620 2 05

P	HD_{max} mm	Z	ZL mm	QAL	n_{max} min^{-1}	ID
1-3	50	4-14	6-10	MC	6000	**135600**

The tool is designed and optimized according to customer requirements in coordination with Leitz application technology.

Modular system for flexible tool design

P	BO mm/in	HD mm	Z	ZL mm	TG	QAL
1	1,5“	max. 25	4	6	2,8	HS
2	1,813“	max. 32	6	6,35	3,53	MC
3	50 mm	max. 38	8	9,52	4,3	
	2,125“	max. 50	10	10	3,8	
			12			
			14			

Spare knives:

Part-no.	BEZ	ABM mm	ZL mm	QAL	ID
3	Minifinger knife	31,75x2,8x19,05	6/7	MC	**618324** ●
2	Shoulder knife	31,6x7x19,05	6/7	MC	**618373** ●
3	Minifinger knife	31,75x3,53x19,05	6,35	MC	**618325** ●
2	Shoulder knife	31,6x8,74x19,05	6,35	MC	**618374** ●
3	Minifinger knife	31,75x3,8x19,05	10/11	MC	**618327** ●
2	Shoulder knife	31,6x11,4x19,05	10/11	MC	**618376** ●

Spare parts:

Part-no.	BEZ	ABM mm	TG mm	ID
1	Clamping arbor	HD 50 mm KL 55 mm		**008226** ●
1	Clamping arbor	HD 38 mm KL 43 mm		**008227** ●
1	Clamping arbor	HD 32 mm KL 34.5 mm		**008228** ●
1	Clamping arbor	HD 25 mm KL 29 mm		**008229** ●
4	Filler piece for rounding knives	33x3.53x19.05,KN1.8x4.2	3,53	**008224** ●
4	Filler piece for rounding knives	33x4.3x19.05,KN1.8x4.2	4,3	**008225** ●
4	Filler piece for rounding knives	33x3,8x19,05,KN1,8x4,2	3,8	**008223** ●
	Assembly package (setting gauges and clamping key)			**116901** ●

● available ex stock
□ available at short notice
Instruction manual visit www.leitz.org

WF 624 2
Disc cutter, minifinger profile with and without shoulders

Minifinger disc cutter tipped with HW or DP cutting edges. Variable arrangement for defined wood thicknesses, with or without shoulder cutter, mounted on screwed sleeve as tool set.



Application

For self-locking longitudinal joints for precise measured components, e.g. finger joint solid wood panels, all kinds of mouldings, floors, parquet, stair and furniture parts, especially narrow mouldings.
Finger jointing lines with cut-off saw for high feed speeds.

Cutting material

HW, DP.

Resharpening area

HW = 3.5 mm, DP = 3-5 times resharpenable.

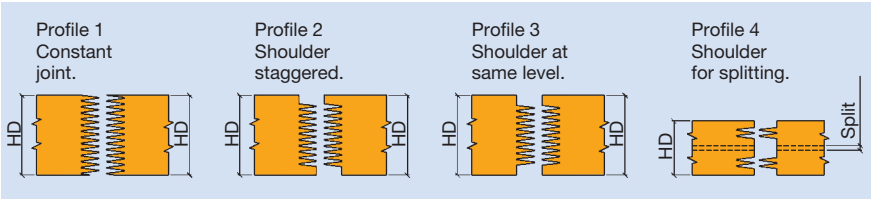

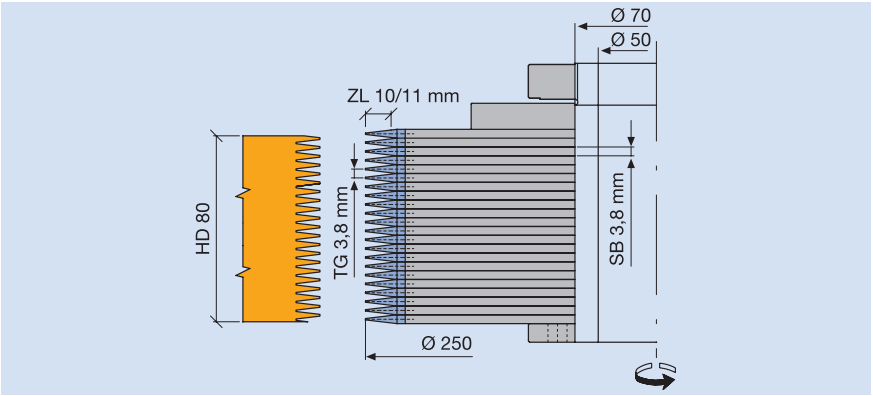

22 HW disc cutter for 80 mm wood thickness.

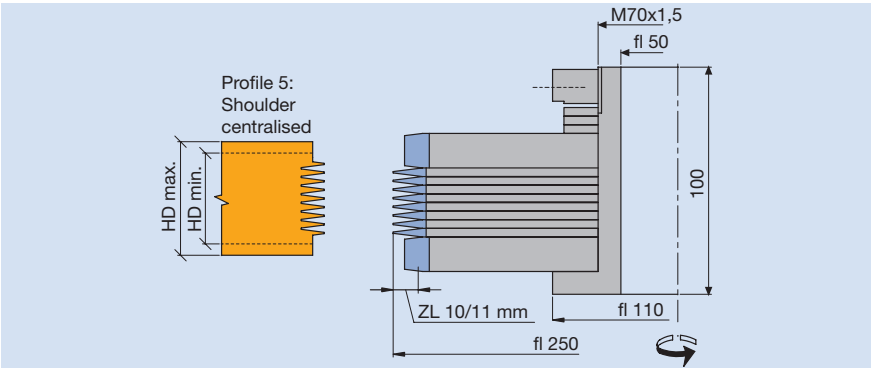

Minifinger shoulder cutter set with 8 finger.

Note:
DP minifinger disc cutters only suitable for knotless wood and wood derived materials that are planed at right angles. Exact clamping for vibration-free cutting is required.

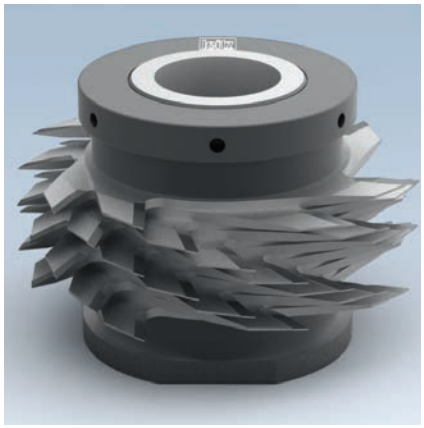



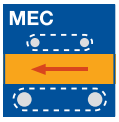



HW



Minifinger disc cutter, HW, with and without shoulder cutter

Application:
For self-locking longitudinal joints for non-supporting components, e.g. panels and strips.

Machine:
Finger joint machines with cut-off saws.

Workpiece material:
Hardwood and abrasive tropical wood.

Technical information:
HW tipped cutters. Tool body thickness corresponds to finger pitch. Particularly suitable for horizontal joints with and without shoulders. Variable design for defined wood thicknesses from 15 to 80 mm. Suitable for small wood thicknesses. Resharpening area 3.5 mm. Design in DP on request.

HW, ZL 10/11 mm, TG 3.8 mm
WF 620 2, WF 621 2

Tool Type	D mm	SB mm	BO mm	Z	n_{max} min^{-1}	ID
Minifinger joint cutter	160	3,8	70	4	9000	**021511** ●
Minifinger joint cutter	250	3,8	70	6	6000	**021513** ●
Shoulder cutter	159,8	15,2	70	4	9000	**021762** ●
Shoulder cutter P3	249,7	15,2	70	6	6000	**021764** ●
Shoulder cutter P5	239,7	15,2	70	6	6000	**022153** ●

Clamping element with threaded nut
TB 270 0

d mm	BO mm	NL mm	GL mm	ID
70	50	116	146	**029695** ●
70	50	80	110	**029473** ●

Spare parts:

BEZ	ABM mm	ID
Sickle spanner adjustable	D90/155; L290; DIN1816; tenon 6	**005462** ●

Spacers
TR 100 0

D mm	B mm	BO mm	TG mm	ID
100	3,8	70	3,8	**028437** ●
100	11,4	70	3,8	**028450** ●
100	15,2	70	3,8	**028439** ●
175	11,4	70	3,8	**028678** ●

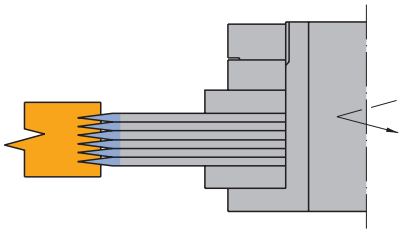

Minifinger joint cutterset without shoulder cutters

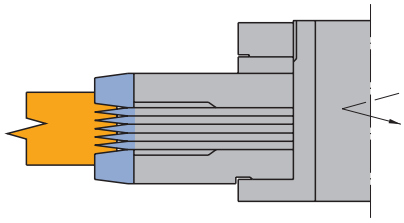

Minifinger joint cutterset with shoulder cutters P3

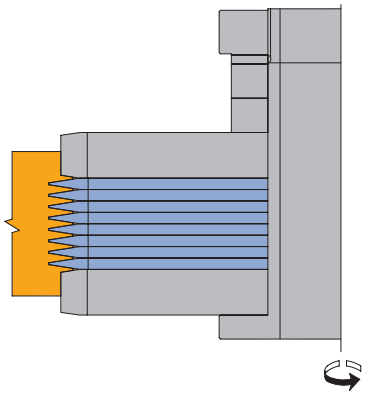

Minifinger joint cutterset with shoulder cutters P5

● available ex stock
□ available at short notice
Instruction manual visit www.leitz.org



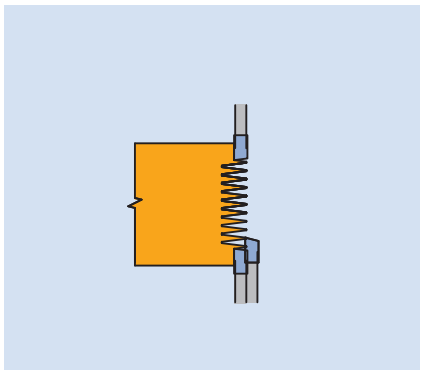

Process step	Scoring across grain with feed.
Workpiece materials	Softwood and hardwood, wood derived material.
Cutting material	HW.
Machines	Finger jointing lines with scoring and cut-off saw.
Application	Scoring minifingers with shoulders.
Tool design **Scoring saw**	HW scoring sawblade, possibly double scoring sawblade mounted on flanged sleeve with bevel one side tooth shape.

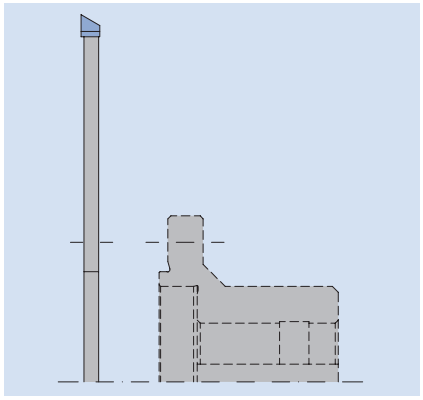

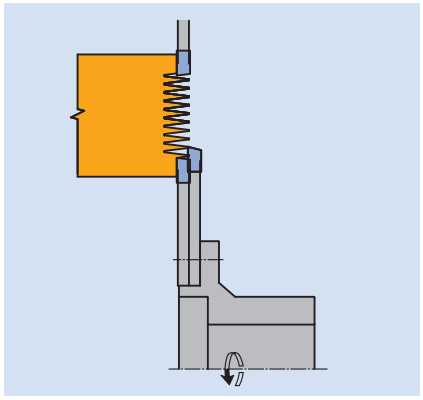

Double scorer scoring shoulders with minifinger joint cutters.

Advantage	Bevel one side teeth used with feed, for cleaner, tear-out free shoulders.

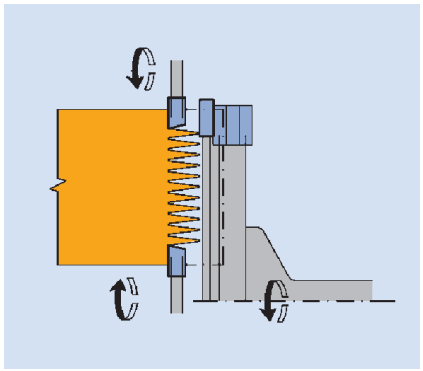

Hogger and scorer for trimming the minifinger joints and scoring the shoulder joint.

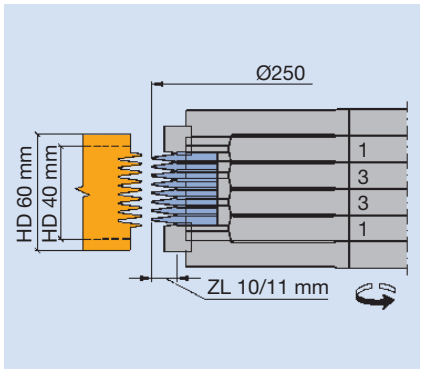



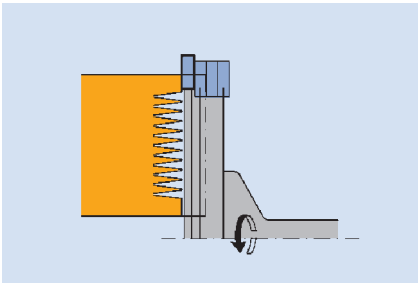

Hogger for trimming minifingers.

Process step	Hogging across grain.
Workpiece materials	Softwood and hardwood, wood derived material.
Cutting material	HW.
Machines	Finger jointing lines with cut-off saw.
Application	Trimming mini fingers.
Cutting width	Saw hogger: 6.35 mm and 8 mm. Hogger: 12 mm. Segment hogger: 10 – 25 mm.
Tool design	
Advantage	One side bevel HW teeth for clean, tear-out free end grain.

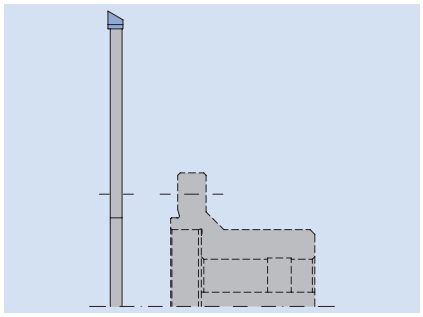

Saw hogger
HW circular sawblade mounted directly on flanged sleeve, bevel one side teeth.

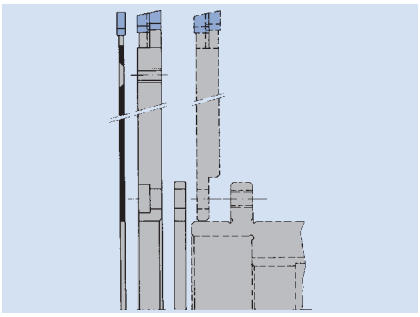

Saw hogger
HW circular sawblade with hogger discs mounted on flanged sleeve
(see section Panel Processing).

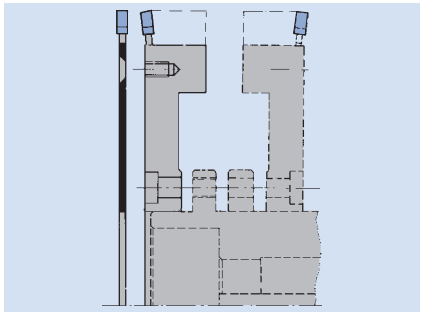

Segment hogger
HW circular sawblade with segmental tool body mounted on flanged sleeve
(see section Panel Processing).



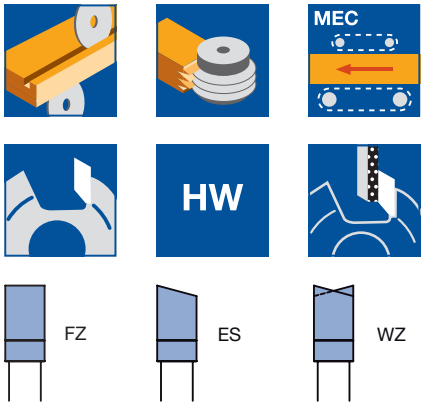

Scorer for shoulder minifinger joints

Application:
For scoring in front of the trimming hogger or for machining the face edge of shoulder joints.

Machine:
Finger joint machines with trimming and scoring aggregates.

Workpiece material:
Softwood, hardwood and wood derived materials.

Technical information:
Particularly suitable for scoring the shoulders on finger joint machines. Tear-free shoulders guaranteed.

Scoring sawblade for Grecon PowerJoint
WK 100 2

D mm	SB mm	BO mm	Z	ZF	QAL	n_{max} min^{-1}	ID LH	ID RH
100	4,4	20	18	FZ	HW	8000	**061995** ●	**061995** ●

Single scoring saw mounted on flanged sleeve
SK 999 2, SK 999 2

D mm	SB mm	BO mm	Z	ZF	QAL	n_{max} min^{-1}	ID LH	ID RH
200	6,5	40 DKN	48	WZ	HW	7200	**061986** □	**061987** □
200	4,75	40 DKN	64	ES	HW	7200	**062632** □	**062633** □

Double scoring saw mounted on flanged sleeve
SK 999 2

D mm	SB mm	BO mm	Z	ZF	QAL	n_{max} min^{-1}	ID LH	ID RH
200	12,2	40 DKN	48	WZ/WZ	HW	7200	**061988** □	**061989** □
200	12,3	40 DKN	48	ES/WZ	HW	7200	**061990** □	**061991** □
190								

Spare sawblades:

D mm	SB mm	BO mm	Z	ZF	NLA mm	QAL	n_{max} min^{-1}	ID LH	ID RH
200	6,5	75	48	WZ	6NL TK95	HW	7200	**061992** ●	**061992** ●
190	6,7	75	48	ES	6NL TK95	HW	7200	**061993** ●	**061994** ●
200	4,75	75	64	ES	6NL TK95	HW	7200	**062630** ●	**062631** ●

Spare parts:

BEZ	ABM mm	L mm	BO mm	ID
Flanged sleeve	113/75x61x40 DKN	61	40 DKN	**061680** ●
Flanged disc	D115/BO75/TK95		75	**028676** ●
Spacer	180x1x75		75	**028677** ●
Countersink screw, Torx® 20	M6x16			**006086** ●

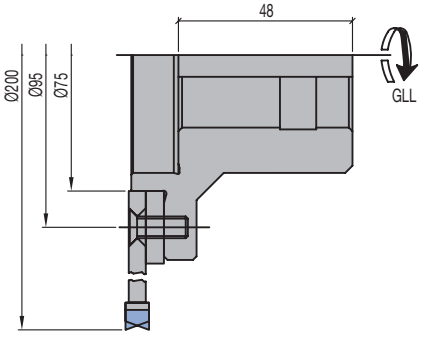

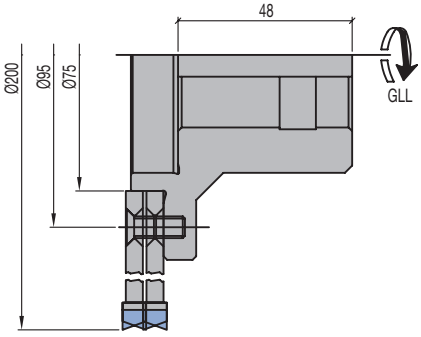

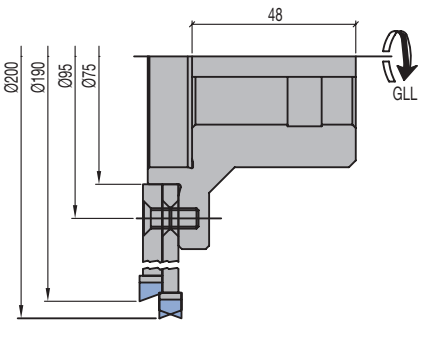

● available ex stock
□ available at short notice
Instruction manual visit www.leitz.org









HW

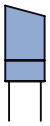

Sawblade hogger for trimming minifingers

Application:
Defined trimming of the workpiece before cutting the fingers for adjusting the finger fitting.

Machine:
Finger joint machine with trimming aggregate, double-end profiler, tenoner.

Workpiece material:
Softwood, hardwood and wood derived materials.

Technical information:
HW circular sawblade with high number of teeth. Bevelled on one side for perfect cutting quality and reduced tear-outs.

Sawblade hogger mounted on flanged sleeve
SK 999 2

D mm	SB mm	BO mm	Z	ZF	QAL	ID LH	ID RH
250	6,35	40 DKN	80	ES	HW	**062618** □	**062619** □
250	8	40 DKN	60	ES	HW	**062620** □	**062621** □
350	8	40 DKN	72	ES	HW	**062622** □	**062623** □

Spare sawblades:

D mm	SB mm	BO mm	Z	ZF	QAL	ID LH	ID RH
250	6,35	75	80	ES	HW	**062624** ●	**062625** ●
250	8	80	60	ES	HW	**062626** ●	**062627** ●
350	8	80	72	ES	HW	**062628** ●	**062629** ●

Spare parts:

BEZ	ABM mm	L mm	BO mm	ID
Flanged sleeve	113/80x59x40 DKN	12,7	40 DKN	**061679** ●
Flanged sleeve	113/75x61x40 DKN	61	40 DKN	**061680** ●
Flanged disc	D215/BO80/TK195		80	**028675** ●
Flanged disc	D115/BO75/TK95		75	**028676** ●
Countersink screw, Torx® 20	M6x16			**006086** ●
Countersink screw, Torx® 20	M5x12			**006247** ●
Cylindrical screw with ISK	M8x12			**005943** ●

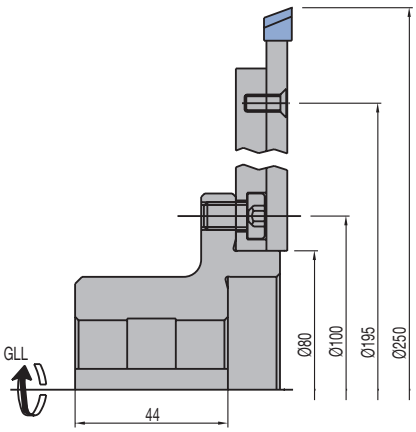

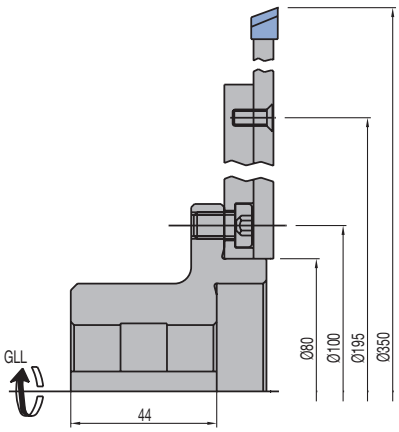

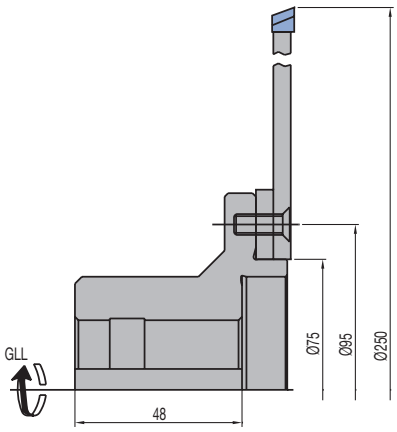

● available ex stock
□ available at short notice
Instruction manual visit www.leitz.org



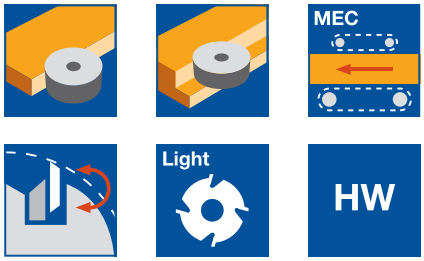



Rebating cutterhead for joinery machines - HeliCut 15

Application:
For cutting grooves, rebate grooves, V-grooves as well as for jointing longitudinal and crosscut wood with large hogging depths in the wood construction.

Machine:
CNC-controlled joinery machines, as well as special machines for general wood construction with machine-specific adaptors.

Workpiece material:
Solid wood, preferably softwood for wood construction, hardwood (oak, ash etc.).

Technical information:
Carrier body constructed from high strength lightweight aluminium alloy. With 4-times turnable, spiral-shaped assembled HW turnblades. Application of the same knives as peripheral knives and spurs. The cutting bevels of the HW knives are numbered. No clamping wedges, direct tangential knife clamping. Easy handling of knife change without further mounting aid.

Aluminium tool body
WW 430 2 05, WW 430-2-05

Machine	D mm	SB mm	BO mm	Z	V	ID
	250	60	30	4x6	2 x 4+4	**132538**
	250	80	30	4x8	2 x 4+4	**132539**
	250	100	30	4x10	2 x 4+4	**132540**
	300	20	30	4x2	2 x 4+4	**132541**
	300	40	30	4x4	2 x 4+4	**132542**
	300	60	30	4x6	2 x 4+4	**132543**
	300	80	30	4x8	2 x 4+4	**132544**
	300	100	30	4x10	2 x 4+4	**132545**
	350	20	30	4x2	2 x 4+4	**132546**
	350	40	30	4x4	2 x 4+4	**132547**
	350	60	30	4x6	2 x 4+4	**132548**
	350	80	30	4x8	2 x 4+4	**132549**
	350	100	30	4x10	2 x 4+4	**132550**
	400	20	30	4x2	2 x 4+4	**132551**
	400	40	30	4x4	2 x 4+4	**132552**
	400	60	30	4x6	2 x 4+4	**132553**
	400	80	30	4x8	2 x 4+4	**132554**
	400	100	30	4x10	2 x 4+4	**132555**
SCM	350	60	HSK-E 63	4x6	2 x 4+4	**132571** □
SCM	350	60	HSK-E 63	4x6	2 x 4+4	**132572** □
Uniteam	250	50	35 DKN	4x5	2 x 4	**132562** □
Uniteam	250	80	35 DKN	4x8	2 x 4	**132561** □
Uniteam	290	80	HSK-E 63	4x8	2 x 4+4	**132563** □
Uniteam	290	80	HSK-E 63	4x8	2 x 4+4	**132564** □
Uniteam	290	80	HSK-A 100	4x8	2 x 4+4	**132565** □
Uniteam	290	80	HSK-A 100	4x8	2 x 4+4	**132566** □
Uniteam	420	80	HSK-E 63	4x8	2 x 4+4	**132567** □
Uniteam	420	80	HSK-E 63	4x8	2 x 4+4	**132568** □
Uniteam	420	80	HSK-A 100	4x8	2 x 4+4	**132569** □
Uniteam	420	80	HSK-A 100	4x8	2 x 4+4	**132570** □
Weinmann	300	20	55	4x2	2 x 4+4	**132557** □
Weinmann	300	50	55	4x5	2 x 4+4	**132558** □
Weinmann	300	60	55	4x6	2 x 4+4	**132560** □
Weinmann	300	61	55	4x6	2 x 4+4	**132559** □

More dimensions on request.

Spare knives:

BEZ	ABM mm	QAL	BEM	VE PCS	ID
Turnblade knife	15x15x2,5	HW	HeliCut 15	10	**009549** ●
Turnblade knife	15x15x2,5	HW-MF	HeliCut 15	10	**009543** ●
Turnblade knife	15x15x2,5	TDC	HeliCut 15		**602900** ●

Spare parts:

BEZ	ABM mm	ID
Countersink screw, Torx® 20	M5x18	**114030** ●
Torx® key	Torx® 20	**006091** ●

● available ex stock
□ available at short notice
Instruction manual visit www.leitz.org

International window systems





The window section is not just a matter of construction specification. More important are the national specifications to which a window must correspond for particular applications. EN 14351-1 defines these mandatory specifications. CE-marking clearly shows that a window meets all the required criteria of the intended application, defining the window construction. Leitz knows the business, and advises and supports customers on the correct design and the best tool.

To support customers with CE certification, Leitz continental standard systems are listed on www.CE-fix.de (“Making CE marking easy for windows and external doors”) from VBH - the world's largest trading company supplying hardware for windows and doors.

In addition to window systems from Leitz, the patented RipTec technology for corner joints by Leitz, and the PlugTec corner joint, designed by Leitz and certified by the ift-Rosenheim Institute as per FE08-1, are also part of this platform.
All construction details in Leitz continental window systems have been designed as required by CE certification. Leitz’s national standard domestic window programs have successfully passed the system test at an authorized testing institute, such as ift-Rosenheim.

Leitz has specifically designed standard systems based on the requirements of certified window systems in order to meet country-specific requirements. These modular system solutions are characterized by high flexibility in production and design, and future-proof technical features including heat technology, noise protection and safety.

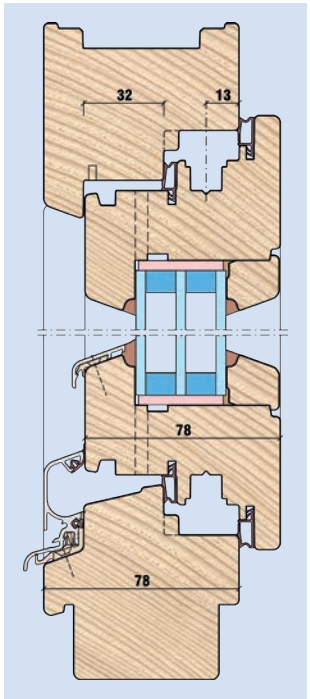

IV78 ClimaTrend
13 mm gear axle
32 mm distance of wind-rain block

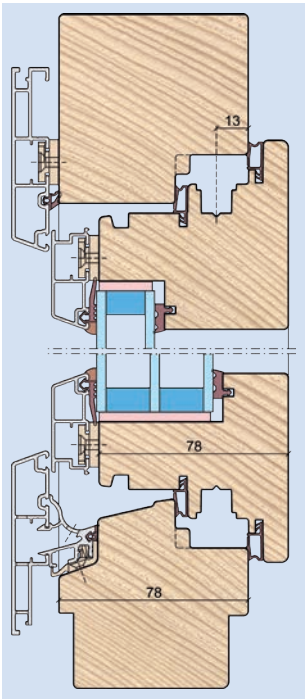

IV78 ClimaTrend
13 mm gear axle

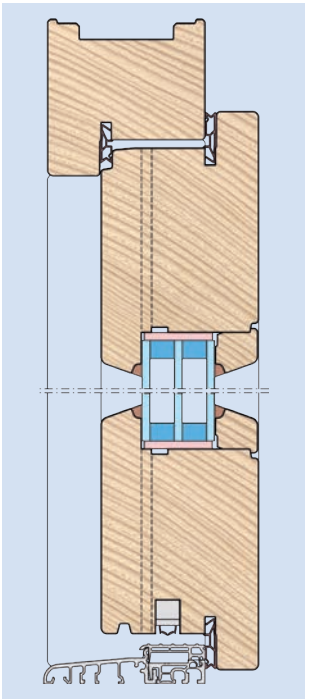

Front door, single rebate
Sash and frame sealing.
Rotary sash sealing stop and front door threshold for barrier-free installation.

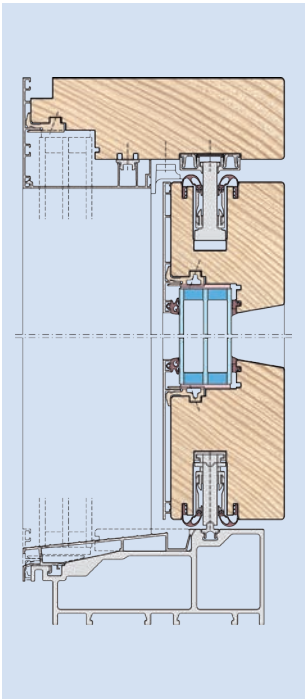

Wood/Alu sliding door
with fixed glazing in the frame
Ground-deep glazing with stepless exit.

Tool systems and processing technology

Especially for cutting technologies designed for the production of wooden windows, such as RipTec or Integral and Hybrid technology as well as toolsets of machine-specific features, allow optimal utilization of machine capacity with excellent machine quality at the same time.
The Leitz tool systems are described extensively in section Profile Tool Systems.

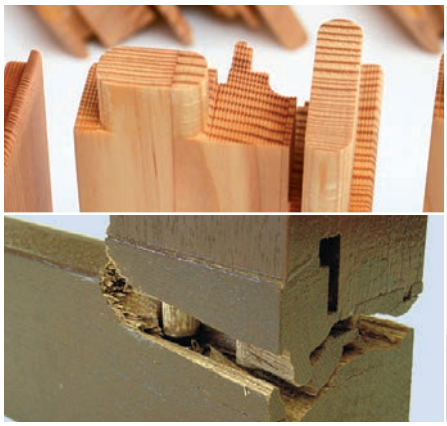

Leitz RipTec: Nearly tear-free finish and maximum stability of the joint with increased feed speed
Leitz PlugTec: The innovative corner joint for the most demanding applications

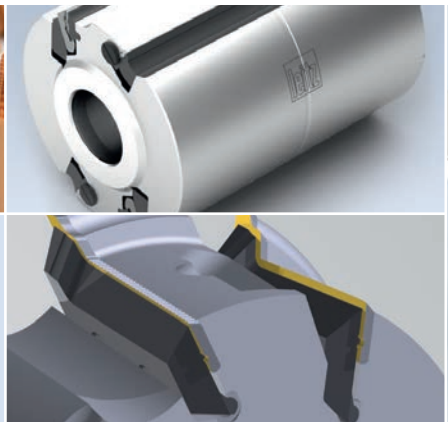

Leitz Integral: Precutting and finish processing with one single tool for increased performance time of the finish edge

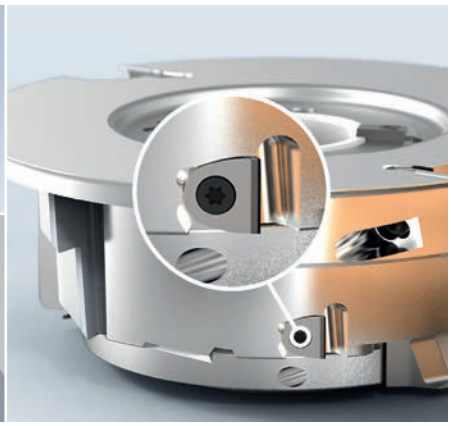

Leitz Hybrid: Combination of HW-tool systems with diamond edges for reduced edge wear

Engineering services



For a head start in an increasingly competitive international marketplace, right from the planning stage, you can count on Leitz. As your expert partner, we offer customized and efficient solutions for the production of modern window and door systems. After determining the requirements, Leitz work in cooperation with machine and software producers to ensure customers receive the most efficient service package. If maximum flexibility is required during production, then the toolsets are split. However, if productivity is the first priority then complete toolsets are the correct solution.
Leitz identify trends in the market, is in constant contact with notable international testing institutes, producers of hinges and seals, and understands what is important in window construction. Our window experts provide support in every way to carry out your objectives.

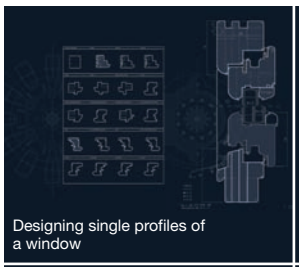

Designing single profiles of a window

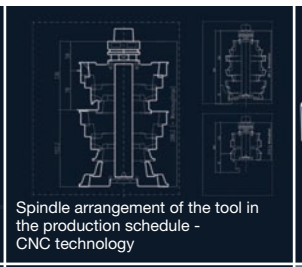

Spindle arrangement of the tool in the production schedule - CNC technology

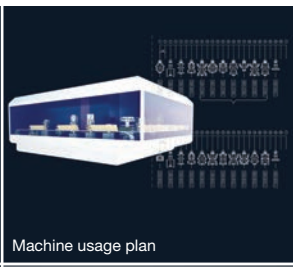

Machine usage plan

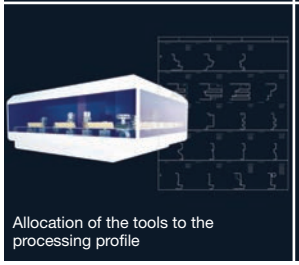

Allocation of the tools to the processing profile

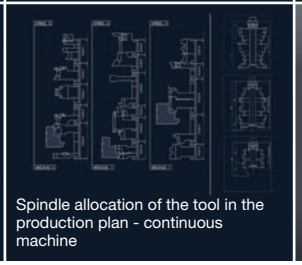

Spindle allocation of the tool in the production plan - continuous machine

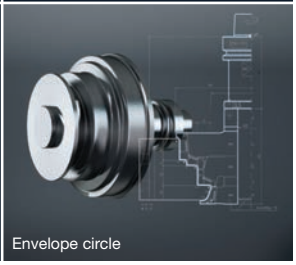

Envelope circle

Problem	Possible cause	Action
Surface defect Cutting quality	– RPM too low	Increase RPM and thus cutting speed increase tool diameter
	– Incorrect geometry	Measure, change tool
	– Spindle and tool tolerances too high	Check motor bearing and tolerances
	– Tool balance	Check and re-balance
	– Cutting speed too high (no chip formation), relation feed to number of teeth not adequate	Increase feed speed, Reduce number of teeth and RPM
	– Number of teeth too low, feed to high	Match number of teeth and feed speed
Wavy, rough surface	– Workpiece feed not consistent	Check feed speed and/or transport equipment
	– Infeed rollers with insufficient pressure or worn	Increase pressure of in feed rollers and recut serrations
	– Workpiece too thin or too short	Observe the machine manufacturer guidelines
	– Chip removal too high	Use for several working steps or pre relieve
	– Resin built up on tool, tool is blunt	Remove resin or resharpen
Surface defect Burn marks	– Cutting speed too high	Reduce cutting speed
	– Relation feed speed to number of teeth not adequate	Match number of teeth and feed speed
	– Tool continues to rotate in standing workpiece	Provide for continuous feed
Surface defect Tear-outs	– Wood moisture too low	Check drying control
	– Wood with many branches (loose branches)	Optimisation with crosscut saws and longitudinal joints
Surface defect Chip marks	– Angle geometry not matched to workpiece material	Check and adjust and/or new tool
	– Gap between knife and clamping element	Clean and carefully mount clamping element and knives
	– Gullet too small	Check and increase
	– Extraction hood and extraction not suitable	Contact machine manufacturer to clarify
	– Extraction performance insufficient in tool area	Guideline: 30 m s^{-1} air supply speed
Profile defect Workpiece – Angle error – uneven	– Tool set profiles not the same, e. g. sets with feed/against feed	Check and match tool sets
	– Stacked spindle positioned in feed direction or not at right angle to table	Check angle with clock gauge on vertically running spindle in two planes
	– Support table and fence worn out	Reprocess and/or replace support table and fence
	– Angle tolerance between support table and fence too big or fence and process edge not correctly adjusted	Check and adjust angles, align plane from fence to process edge including tool
Motor power Feed speed	– High resin build up on tool, tool blunt	Remove resin from tool and resharpen more frequently
	– Tool gullet too small	Check and increase
	– Cutting angle too small	Adjust or new tool
	– Cutting across grain too deep	Use several working steps or pre cut

Wear of HS cutting edges
When planing solid wood (softwood or hardwood) the HS cutting edges are subject to mechanical and chemical wear.
This leads to blunting of the cutting edges and will consequently affect the quality of the wood surface.

Significant blunting requires considerably more work when resharpening the knives and reduces the number of possible resharpens.

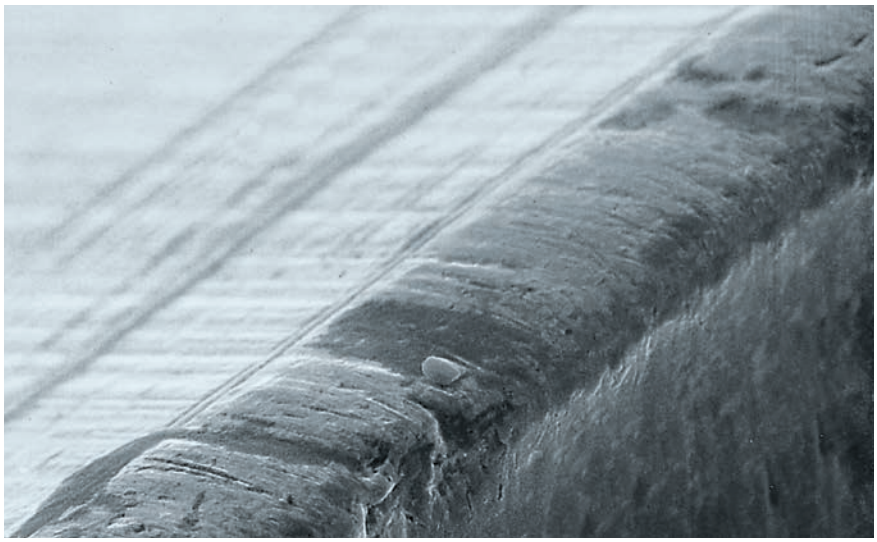

Wear of HS cutting edges.

Pitting wear at the face HS
Chemical wear can be very high because of the consistency of the wood, e.g. machining wet wood can lead to pitting of the face.

The pitting weakens the cutting edge and results in chipping/breakage.



Pitting wear.

Destruction of HW cutting edges
Too large knife projection or tipping material overhang will result in breakages when machining very hard wood.
Too large projection of carbide tipped planer knives, plus a low cutting angle can overstress the knife when machining very hard timber.
This can result in hairline cracks or knife breakages.

The maximum knife projection, angle geometry and minimum clamping length given in the handling instructions must be adhered to.

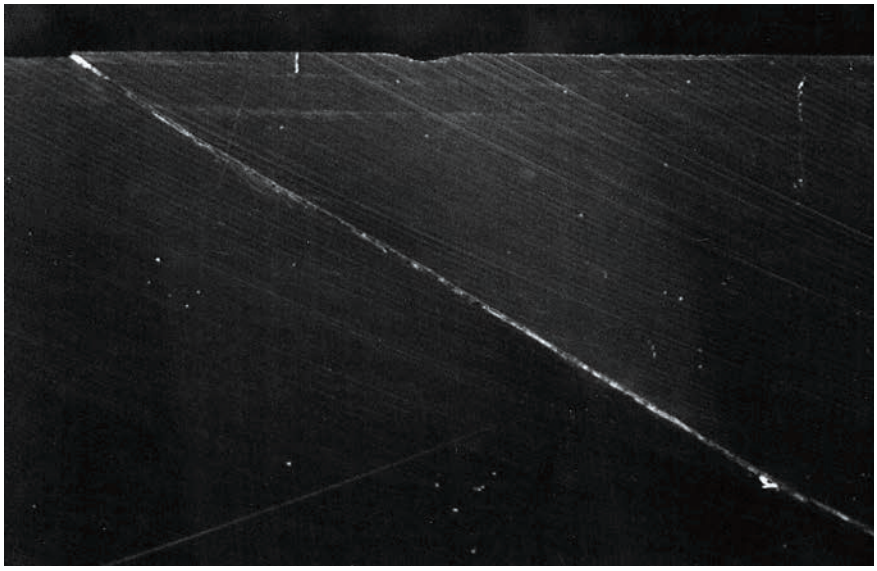

Destruction of HW cutting edges.

Cutting edge fractures
Dull cutting edges, unbalancing or weak feed pressure can create vibrations in the machine, especially when machining very hard materials.

An uneven cutting force can result in chipping to the cutting edge. When tools are in constant use, it is important the tools are sharpened frequently and not allowed to become too blunt.
A higher cutting angle may help.

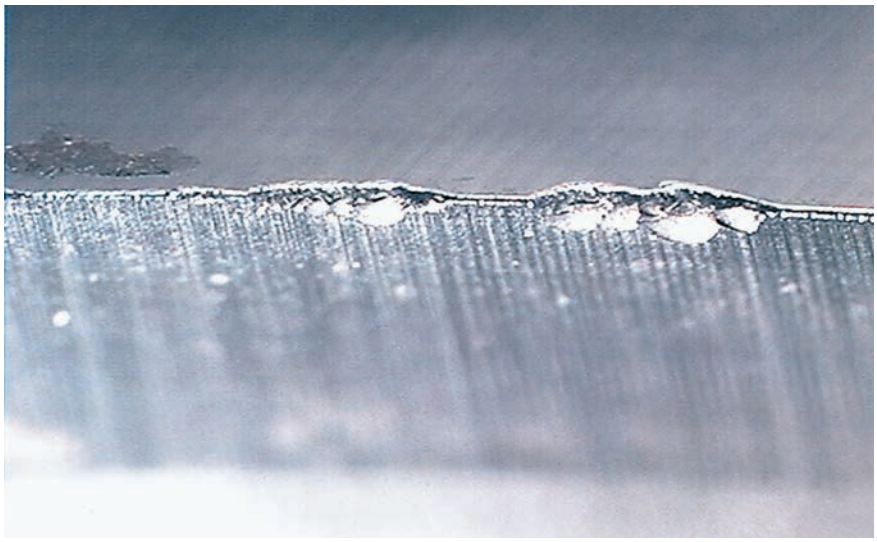

Cutting edge fractures.

Wear to HW cutting edges
The photograph shows the wear of a uniformly blunt cutting edge.

The cutting edge can be resharpened without a significant material loss.
This increases the overall performance time of the tool.

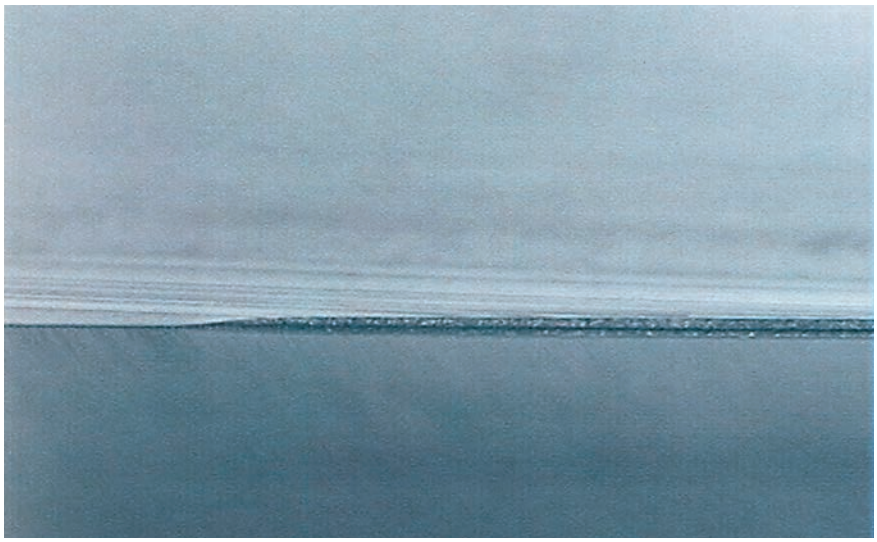

Wear of HW cutting edges.

Too much wear to cutting edges
When the cutting edges are very blunt, the cutting force becomes too high, the surface quality deteriorates, resulting in additional resharpening and loss of tool life.

If the cutting edge is not resharpened correctly, the performance time is reduced, resulting in cutting edge fractures.

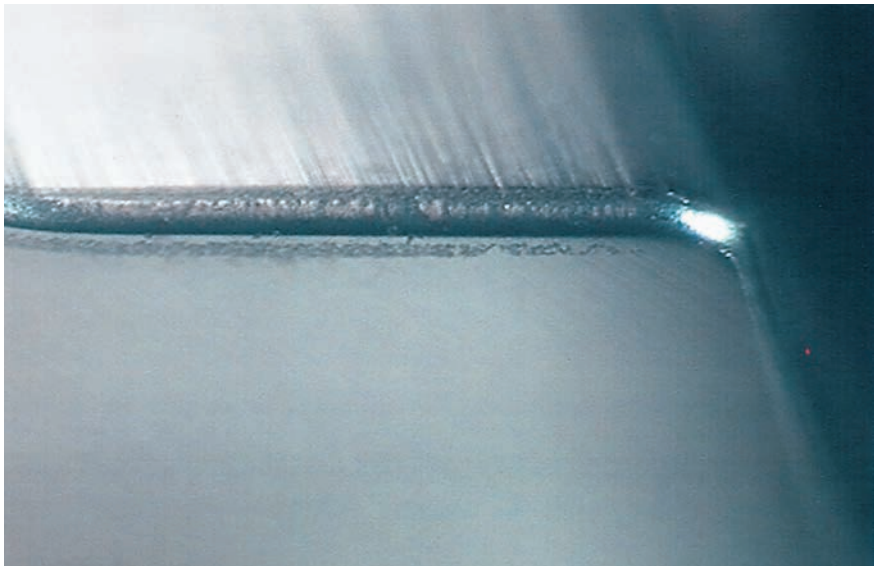

Too much wear on cutting edges.

Cutting edge abrasion
For largely homogenised materials, mechanical wear will lead to continuous rounding of the cutting edges.

The quality of the surface determined the level of abrasion and should normally be, as a guideline, between 0.2 to 0.3 mm maximum.

Tipped tools require resharpening to ensure the efficiency of the tools.

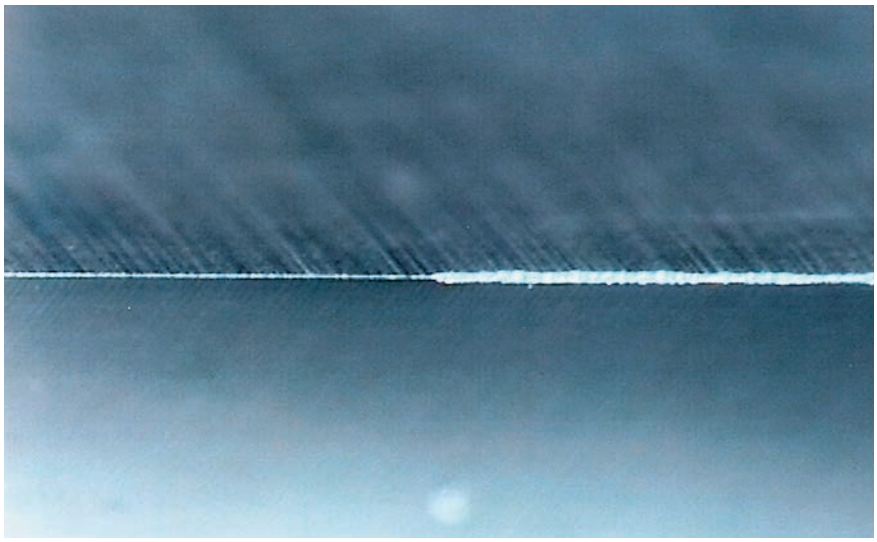

Common rounding of cutting edges after use for spruce

Cutting edge abrasion by chemical impact
When processing workpiece materials with a high content of tannic acids (e.g. oak), the cutting edge abrasion is mainly caused by mechanical plus chemical wear.

Cobalt, a binding agent in tungsten carbide, is washed out by chemical reaction leading to early depletion of the cutting edge.

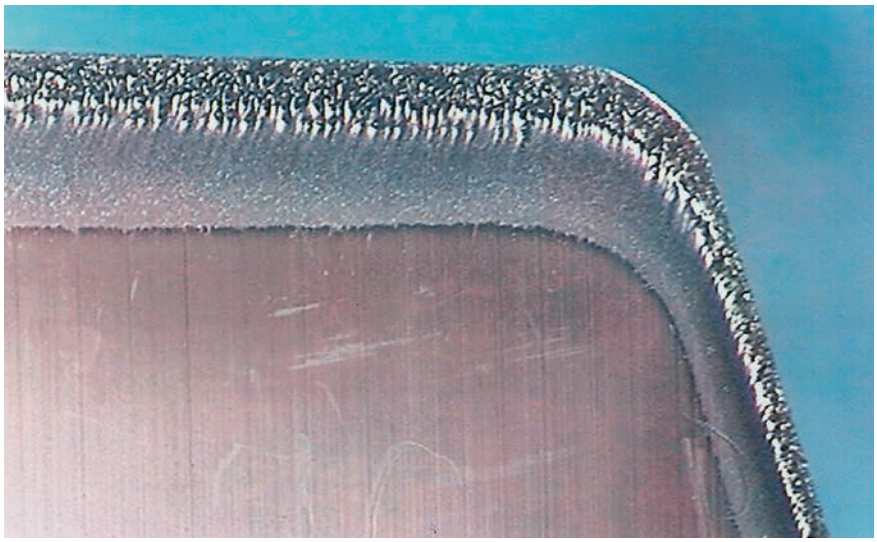

Chemical impact – Cutting edge abrasion – Application oak

Cutting edge damage caused by improper repair
For cutterheads/sets with HW cutting elements, the knives must be turned or replaced after reaching the end of their performance time.

Resharpening parallel to face will reduce the essential clamping forces, creating gaps between knives and clamping wedges, impair the surface quality, and is not permitted for safety reasons.

Ensure careful cleaning and mounting when changing the knives of tools with turnblade/throw away knives.

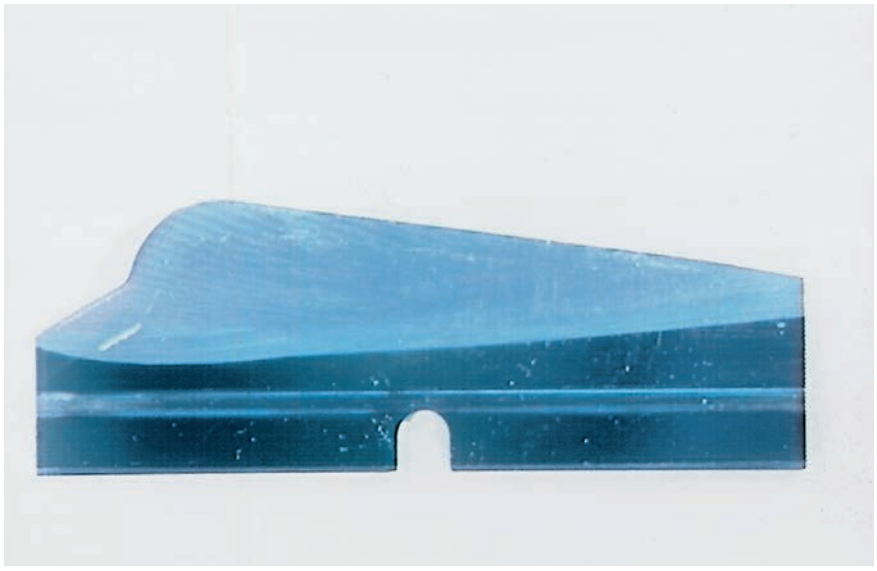

Cutting edge abrasion caused by improper repair

Enquiry/order form special tools – planing and profiling

Customer details: Customer number: (if known)

☐ Enquiry
☐ Order

Delivery date: (not binding) CW

Company:

Street:

Post code/place:

Country:

Phone/fax:

Contact person:

Signature:

Date:

Enquiry/order no.:

Tool ID: (if known)

No. of pieces:

Workpiece material:

☐ Solid wood Type:
☐ Wood material Type:
☐ Coating Type:
☐ Other Type:
☐ Finish hogging

Moisture: %
Density: g/cm³
Further information:

Machine:

(e.g. spindle moulders, four-sided moulders edging machines, window making machines etc.)

Manufacturer:
Type/construction year:
Model:

Specification of spindle sequence in feed direction

e. g.: 1 bottom, 2 right, 3 left, 4 top, 5 multi-purpose
or: 1 scraping, 2 hogging, 3 cutting, 4 finish cutting, 5 post cutting
or: 1 sawing, 2 slot/tenon, 3 cutting with feed, 4 cutting against feed

Motor no.:	Power:	RPM:	Spindle dimension:	Additional information:
1	kW	min^{-1}	mm	
2	kW	min^{-1}	mm	
3	kW	min^{-1}	mm	
4	kW	min^{-1}	mm	
5	kW	min^{-1}	mm	

Direction of rotation (LH/RH) or cutting direction (with feed/against feed) must be specified for each spindle.

Standard or high precision motor

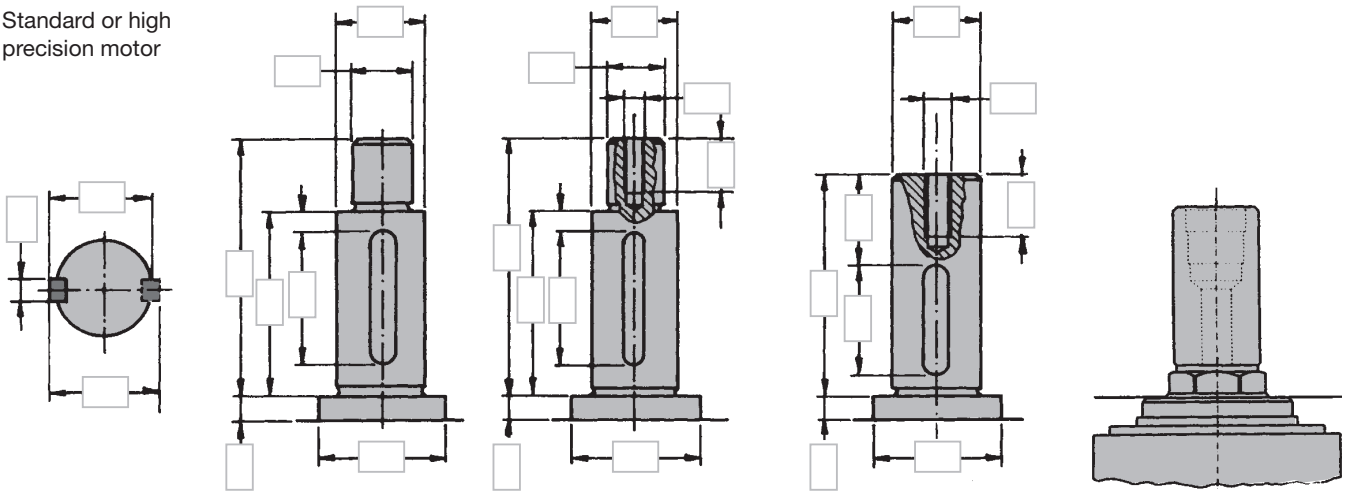

Tool:

Tool type (e.g. one part/tipped tools/assembled tool, see product information)

Dimension:

Diameter: mm

Cutting width: mm

Bore: mm

Number of teeth:

Cutting material:
- ☐ HL
- ☐ HS
- ☐ ST
- ☐ HW
- ☐ DP

Cutting point:
- ☐ no cutting point
- ☐ sleeve with interlock
- ☐ sleeve without interlock
- ☐ quick clamping sleeve
- ☐ hydro sleeve

Direction of rotation:
- ☐ right hand rotation
- ☐ left hand rotation

Cutting direction:
- ☐ with feed
- ☐ against feed

Kind of feed:
- ☐ manual (MAN)
- ☐ mechanical (MEC)

Feed speed: min^{-1}

Cutting width (SB): mm

Cutting depth: mm

Remark:

zero diameter: mm

max. diam.: mm

zero height: mm

clamping length: mm

Application:

Solid wood

Wood materials ☐ top layer ☐ longitudinal ☐ Medium layer ☐ crosscut ☐ front ☐ Top and medium layer

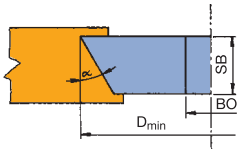

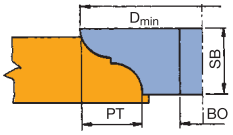

Technical information:

Tipped tools (bevel trimming cutters/profile routers):
Design: bending test, Z2, mech. feed, Z3, Z4, round shape
Tooth shape: with/without spur

Table for min. tool diameter.
Applicable for bevel trimming cutter
BO – 30 mm:
For bore 40 mm:
D + 10 mm
For bore 50 mm:
D + 20 mm

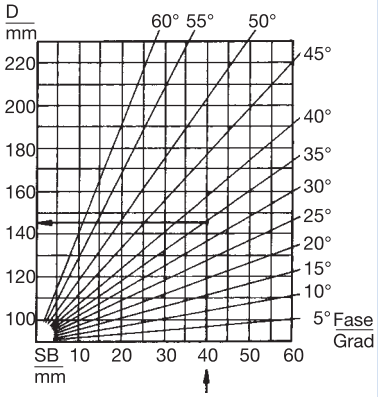

Formula for min. tool diameter:
Applicable for profile routers BO – 30 mm:
For bore 40 mm: D + 10 mm
For bore 50 mm: D + 20 mm
Formula: D_{min} = 100 + 2 x PT (mm)

Note:
Bevels of more than 45° and large profile depths require large diameters. The maximum permitted RPM must be considered when calculated the cutting diameter and must not be exceeded. Profile sketches must clearly indicate whether the material (wood) or cutter is shown. Please specify motor side, direction of rotation, dimensions and any other conditions on the material sample or the drawings.

Assembled tools with turnblade/throw away knives:
Formula: D_{min} = 90 + 2 x PT (mm) – Applicable for BO – 30 mm

Sketch for application plan, profile drawing, special motor spindle etc.
Please specify workpiece support and fence side and/or workpiece face side top/bottom.

Key to pictograms


Scoring, top and bottom


Hogging


Grooving, horizontal and vertical


Jointing


Rebating


Profiling


Profiling joints


Profiling tongue and groove


Planing


Planing, profiling

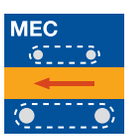

Mechanical feed



Manual feed


Solid metal tool


Tipped tool



Light alloy body


Interchangeable knives


Mechanical knife clamping, reversible


Centrifugal knife clamping, reversible


Mechanical knife clamping, adjustable - serrated


Mechanical knife clamping adjustable - plane echan.



Mechanical knife clamping, re-sharpenable and constant diameter


Hydro clamping


Resharpenable cutting face


Resharpenable clearance face



Low noise



High-alloyed tool steel



High-speed steel



Tungsten carbide



Carbide metal coating

www.leitz.org

SDZ/MA 02/2025 Subject to changes prior to technical developments. © Leitz GmbH & Co. KG

Manual feed

Leitz Lexicon Edition 7 | Version 2 | 09/2024



Explanation of abbreviations

A	=	dimension A
a_e	=	cutting thickness (radial)
a_p	=	cutting depth (axial)
ABM	=	dimension
APL	=	panel raising length
APT	=	panel raising depth
AL	=	working length
AM	=	number of knives
AS	=	anti sound (low noise design)
b	=	overhang
B	=	width
BDD	=	thickness of shoulder
BEM	=	note
BEZ	=	description
BH	=	tipping height
BO	=	bore diameter
CNC	=	Computerized Numerical Control
d	=	diameter
D	=	cutting circle diameter
D0	=	zero diameter
DA	=	outside Diameter
DB	=	diameter of shoulder
DFC	=	Dust Flow Control (optimised chip clearance)
DGL	=	number of links
DIK	=	thickness
DKN	=	double keyway
DP	=	polycrystalline diamond
DRI	=	rotation
FAB	=	width of rebate
FAT	=	depth of rebate
FAW	=	bevel angle
FLD	=	flange diameter
f_z	=	tooth feed
$f_{z\ eff}$	=	effective tooth feed
GEW	=	thread
GL	=	total length
GS	=	Plunging edge
H	=	height
HC	=	tungsten carbide, coated
HD	=	wood thickness (thickness of workpiece)
HL	=	high-alloyed tool steel
HS	=	high-speed steel (HSS)
HW	=	tungsten carbide (TCT)
ID	=	ident number
IV	=	insulation glazing
KBZ	=	abbreviation
KLH	=	clamping height
KM	=	edge breaker
KN	=	single keyway
KNL	=	combination pinhole consists of 2/7/42 2/9/46,35 2/10/60
L	=	length
l	=	clamping length
LD	=	left hand twist
LEN	=	Leitz standard profiles
LH	=	left hand rotation
M	=	metric thread
MBM	=	minimum order quantity
MC	=	multi-purpose steel, coated
MD	=	thickness of knife
min^{-1}	=	revolutions per minute (RPM)
MK	=	morse taper
m min^{-1}	=	metres per minute
m s^{-1}	=	metres per second
n	=	RPM
$n_{max.}$	=	maximum permissible RPM
NAL	=	position of hub
ND	=	thickness of hub
NH	=	zero height
NL	=	cutting length
NLA	=	pinhole dimensions
NT	=	grooving depth
P	=	profile
POS	=	cutter position
PT	=	profile depth
PG	=	profile group
QAL	=	cutting material quality
R	=	radius
RD	=	right hand twist
RH	=	right hand rotation
RP	=	radius of cutter
S	=	shank dimension
SB	=	cutting width
SET	=	set
SLB	=	slotting width
SLL	=	slotting length
SLT	=	slotting depth
SP	=	tool steel
ST	=	Cobalt-basis cast alloys, e.g. Stellite™
STO	=	shank tolerance
SW	=	cutting angle
TD	=	diameter of tool body
TDI	=	thickness of tool
TG	=	pitch
TK	=	reference diameter
UT	=	cutting edges with irregular pitch
V	=	number of spurs
v_c	=	cutting speed
v_f	=	feed speed
VE	=	packing unit
VSB	=	adjustment range
WSS	=	workpiece material
Z	=	number of teeth
ZA	=	number of fingers
ZF	=	tooth shape (cutting edge shape)
ZL	=	finger length

Notes to the Lexicon concerning the diagrams and tables

The statements made in the diagrams and tables relate to specific conditions and represent parameters from tests subjected to defined conditions. Variations when using tools in individual case due to special application conditions may be possible. Our support team will provide you with detailed information.



4. Manual feed





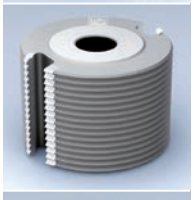



4.1	Grooving	2
4.1.1	Grooving cutters	3
4.1.2	Grooving cutterheads	8
4.1.3	Profile cutters - pitch pockets	11
4.2	Jointing, rebating and bevelling	12
4.2.1	Jointing and rebating cutters	13
4.2.2	Jointing and copy shaping cutterheads	14
4.2.3	Rebating cutterheads	15
4.2.4	Bevelling cutterheads	21
4.3	Longitudinal, width and mitre joints	24
4.3.1	Glue joint cutterheads	25
4.3.2	Mitre joint cutterheads	27
4.4	Profiling	29
4.4.1	Door rebate – cutterhead sets	30
4.4.2	Door lining cuttersets	32
4.4.3	Radius profile cutterheads	33
4.4.4	Profile and counter profile cutterheads	42
4.4.5	Panel raising profile cutterheads	47
4.4.6	Common profiles	51
4.4.7	Multi-prupose profile cutterheads	54
Troubleshooting		63
Signs of wear		64
Enquiry/order form special tools – manual feed		66
Alphabetical product index		68
ID index		69

Application

To produce different groove widths, manual or mechanical feed, along or across the grain.

Workpiece material

Softwood and hardwood, glulam, chipboard and fibre materials, uncoated, veneered, plastic and paper coated. Plastics and foams.

Machines

Portable machines, spindle moulders, moulders, double-end tenoners, machining centres, edgebanding machines etc.

Type of feed

Manual feed:
Application only against feed.

Mechanical feed:
Application with or against feed,
for minimum tear out, use with feed necessary.

Tool design



Tipped tools:
With HW or DP. DP tips suitable for abrasive materials.

Replaceable tip tools:
Design with HW turnblade cutters for constant diameter and constant cutting widths.

Two and multiple part tools:
Designed so the cutting width can be adjusted either by spacers (adjustment steps of 0.10 mm) or by a continuously adjustable sleeve for HW or DP tipped tools.

Single tools:
Suitable for use as set.

Optimised gullet design DFC:
The DFC concept directs the chips away from the workpiece, so leaving the tool cutting area unhindered. DFC increases tool performance.

Benefits:
– Better product quality by eliminating chip marks or damage to the workpiece edges.
– Reduced tool cutting edge wear by eliminating multiple cutting.

Recommended value for tooth feed rate f_z (in mm)

Solid wood	
Along	0.60 – 0.80 mm
Across	0.30 – 0.40 mm
Glulam	0.40 – 0.50 mm
Chipboard and fibre material	
Without coating	0.50 – 0.70 mm
Coated	0.20 – 0.40 mm
Veneered	0.10 – 0.15 mm
Wood derived materials	
Middle layer	0.30 – 0.60 mm
Top layer	0.08 – 0.12 mm
Plastic	0.20 – 0.50 mm
Polymer compound	0.05 – 0.05 mm
Non-ferrous metals	0.03 – 0.05 mm

$v_f = f_z \cdot n \cdot Z/1000$













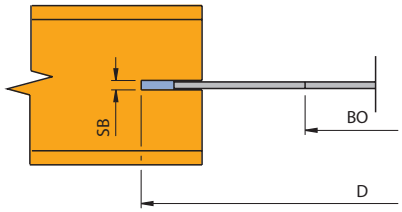

Scheme: Grooving in middle layer

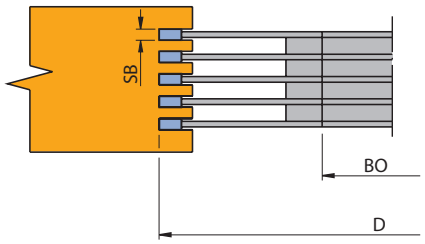

Scheme: Set assembly for lock corner joint

Grooving cutters for manual feed

Application:
For grooving with (MEC) or against feed (MAN).

Machine:
Spindle moulders, moulders and double-end tenoners.

Workpiece material:
Solid wood; uncoated, coated and veneered wood derived materials.

Technical information:
Tool body design with round, closed shape.

Z 12
WF 100 1 05

D	SB	TDI	BO	BO_{max}	Z	n	ID
mm	mm	mm	mm	mm		min^{-1}	
125	1,5	0,8	30	50	12	6200 - 13700	**020241** ●
125	2,0	1,2	30	50	12	6200 - 13700	**020243** ●
125	2,5	1,4	30	50	12	6200 - 13700	**020245** ●
125	3,0	2,0	30	50	12	6200 - 13700	**020246** ●
125	3,5	2,2	30	50	12	6200 - 13700	**020247** ●
125	4,0	2,5	30	50	12	6200 - 13700	**020248** ●
125	4,5	3,0	30	50	12	6200 - 13700	**020249** ●
150	1,5	0,8	30	60	12	5200 - 11400	**020265** ●
150	2,0	1,2	30	60	12	5200 - 11400	**020267** ●
150	2,5	1,4	30	60	12	5200 - 11400	**020269** ●
150	3,0	2,0	30	60	12	5200 - 11400	**020250** ●
150	3,5	2,2	30	60	12	5200 - 11400	**020251** ●
150	4,0	2,5	30	60	12	5200 - 11400	**020252** ●
150	4,5	3,0	30	60	12	5200 - 11400	**020253** ●
150	5,0	3,5	30	60	12	5200 - 11400	**020254** ●
150	6,0	4,5	30	60	12	5200 - 11400	**020255** ●
150	7,0	5,0	30	60	12	5200 - 11400	**020256** ●
150	8,0	6,0	30	60	12	5200 - 11400	**020257** ●
150	9,0	7,0	30	60	12	5200 - 11400	**160100** ●
150	10,0	8,0	30	60	12	5200 - 11400	**160101** ●
180	4,0	2,5	30	70	12	4300 - 9500	**020260** ●
180	5,0	3,5	30	70	12	4300 - 9500	**020261** ●
180	6,0	4,5	30	70	12	4300 - 9500	**020262** ●
180	8,0	6,0	30	70	12	4300 - 9500	**020263** ●
180	10,0	8,0	30	70	12	4300 - 9500	**160102** ●

Groove cutter for MEC, see section Panel Processing.
For spacers TR 100 0 used as a set, see section Knives and Spare Parts.









HW

DP



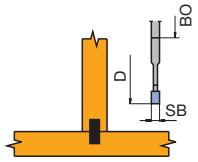

Lamello - T-joint

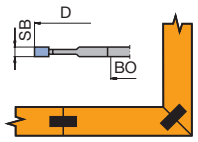

Lamello - Longitudinal/corner joint

Grooving cutter - lamello joints

Application:
For grooving lamello joints and for cutting grooves for corner joints and longitudinal joints (e.g. picture frames, furniture doors).

Machine:
Portable power tools - grooving cutters (e.g. Lamello etc.).

Workpiece material:
Solid wood; uncoated, coated and veneered wood derived materials.

Technical information:
Tool body design with round, closed shape.

HW tipped
WF 102 1 01

D mm	SB mm	BO mm	NLA mm	Z	V	QAL	n min^{-1}	ID
100	4,0	22	4/4,5/36	2	4	HW	7800 - 13300	**020124** ●

DP tipped
WF 100 1 DP

D mm	SB mm	BO mm	NLA mm	Z	QAL	n min^{-1}	ID
100	4	22	4/4,5/36	4	DP	7800 - 13300	**090017** ●

Grooving cutterhead
WW 102 1 01

D mm	SB mm	BO mm	NLA mm	Z	V	QAL	n min^{-1}	ID
100	4	22	4/4,5/36	2/2	2/2	HW	7800 - 13300	**020131** ●

Spare knives:

Part-no.	BEZ	QAL	VE PCS	ID
1	Turnblade knife	HW	10	**005114** ●
2	Turnblade spur VS4	HW	10	**005130** ●

Spare parts:

Part-no.	BEZ	ABM mm	ID
3	Special nut for VS	9,9x1,60/M4	**005654** ●
4	Special nut for WPL	11,9x2,2/M4	**005653** ●
5	Countersink screw, Torx® 9	M4x0.5x3.2	**006057** ●
6	Torx® key	Torx® 9	**005463** ●

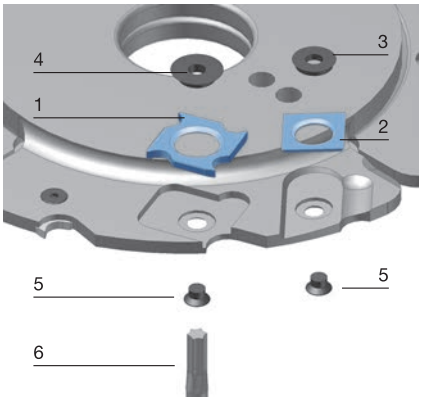

● available ex stock
□ available at short notice
Instruction manual visit www.leitz.org

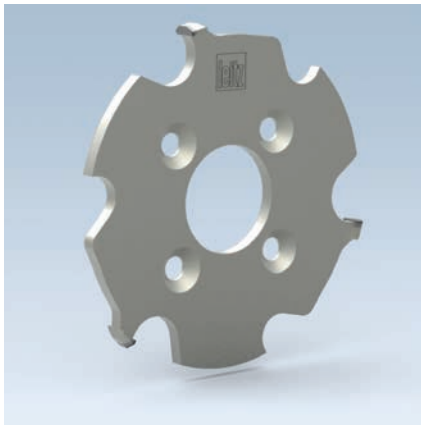







DP

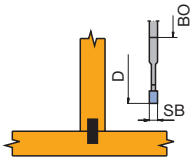

Lamello - T-joint

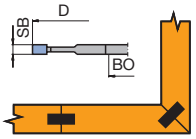

Lamello - Longitudinal/corner joint

Grooving cutter Lamello® Clamex® P-System®

Application:
For grooving lamello joints and for cutting grooves for corner joints and longitudinal joints.

Machine:
Portable power tools - grooving cutters (e.g. Lamello etc.) and for use on CNC machining centres.

Workpiece material:
Solid wood; uncoated, coated and veneered wood derived materials.

Technical information:
Tool body design with round, closed shape.

DP tipped for Clamex P - connector
WK 100 3 DP, WK 103 2 DP

D	SB	BO	NLA	Z	QAL	n	ZF	DRI	ID
mm	mm	mm	mm			min^{-1}			
100,4	7	22	4/4,3/36	3	DP	7800 - 13300	TR	RH	**192378** ●
100,4	7	30	4/6,6/48	3	DP	7800 - 13300	TR	LH	**192295** ●
100,4	7	30	4/6,6/48	3	DP	7800 - 13300	TR	RH	**192377** ●
100,4	7	30	4/6,6/48	6	DP	7800 - 13300	TR	RH	**192298** ●
100,4	7	30	4/6,9/52 4/6,9/48	6	DP	7800 - 13300	TR	LH, RH	**192311** ●
100,4	7	40	4/5,5/52	3	DP	7800 - 13300	TR	RH	**192296** ●

Suitable arbors see section Clamping Systems. Drills for access bore see section Drilling.

Abors with shank to mount the grooving cutter
S16x50,d30,l4,L85 ID **041429**
S25x60,d=30,l=4,L=102 ID **041367**
S20x50,d=30,l=4,L=102 ID **041368**
S25x60,d=30,l=4,L=127 ID **042980**
Drill for access bore hole
D = 6 mm ID **034116**
Shank cutter for CNC: ID **039161**

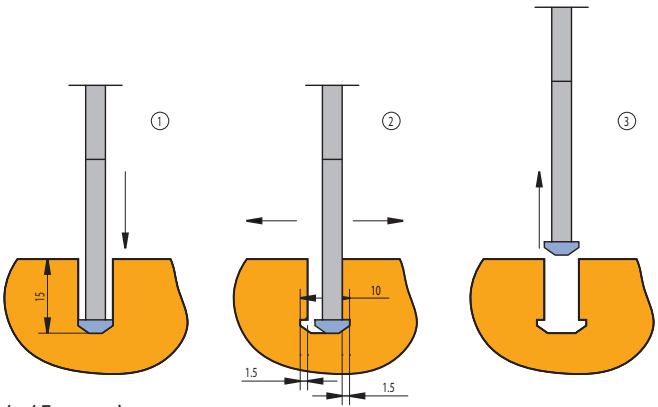

1. 15 mm plunge.
2. 1.5 mm left and right side recesses.
3. Leaving from the middle position.











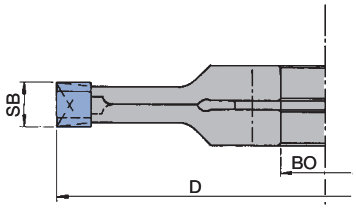

Grooving cutterset, 2 part design

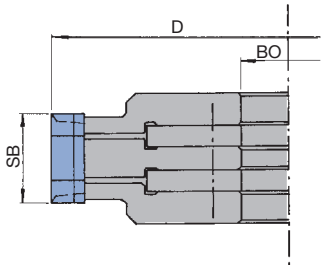

Grooving cutterset with 1 additional extension part

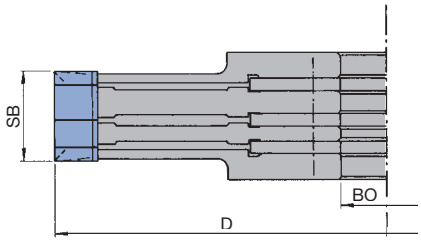

Grooving cutterset with 2 additional extension parts

Grooving cutterset, adjustable with spacers

Application:
For cutting different groove widths.

Machine:
Spindle moulders, moulders, edgebanding machines and stationary routers with/without CNC control, double-end tenoners.

Workpiece material:
Solid wood along grain and across grain; uncoated, coated and veneered wood derived materials in top layer and middle layer.

Technical information:
Adjustment of cutting widths with spacers (adjustment 0.10 mm).

2 part with spurs; SB 1.8 - 23.5 mm
SF 501 1 01

D	SB	BO	BO_{max}	Z	V	NT	n	ID
mm	mm	mm	mm			mm	min^{-1}	
140	1,8 - 3,4	30	35	4	4	20	5500 - 9500	**020545** ●
140	1,8 - 3,4	35	35	4	4	20	5500 - 9500	**020546** □
140	1,8 - 3,4	40	45	4	4	20	5500 - 9500	**020547** □
140	2,2 - 4,0	30	35	4	4	20	5500 - 9500	**020549** ●
140	2,2 - 4,0	35	35	4	4	20	5500 - 9500	**020550** □
140	2,2 - 4,0	40	40	4	4	20	5500 - 9500	**020551** □
140	2,2 - 4,0	50	50	4	4	20	5500 - 9500	**020552** □
150	4,0 - 7,5	30	35	4	4	37,5	5200 - 8900	**020573** ●
150	4,0 - 7,5	40	45	4	4	30	5200 - 8900	**020575** □
150	4,0 - 7,5	50	50	4	4	27,5	5200 - 8900	**020576** □
150	7,5 - 14,5	30	35	4	4	37,5	5200 - 8900	**020580** ●
150	7,5 - 14,5	35	45	4	4	30	5200 - 8900	**020581** □
150	7,5 - 14,5	40	45	4	4	30	5200 - 8900	**020582** □
150	7,5 - 14,5	50	50	4	4	27,5	5200 - 8900	**020583** □
180	6,0 - 11,5	30	35	4	4	45	4300 - 7400	**020584** ●
180	12,0 - 23,5	30	35	4	4	45	4300 - 7400	**020585** ●
180	12,0 - 23,5	40	45	4	4	45	4300 - 7400	**020586** □

2 part; SB 5.2 - 14 mm
SF 501 1 03

D	SB	BO	BO_{max}	NLA	Z	V	NT	n	ID
mm	mm	mm	mm	mm			mm	min^{-1}	
250	5,2 - 10	30	35	2/10/60	8	8	40	3500 - 6000	**020693** ●
250	5,2 - 10	35	60		8	8	40	3100 - 5300	**020694** □
250	7,2 - 14	35	60		8	8	40	3100 - 5300	**020697**

3 / 4 part; SB 4.0 - 30 mm
SF 501 1, SF 501 1 02

D	SB	BO	BO_{max}	NLA	Z	V	NT	n	ID
mm	mm	mm	mm	mm			mm	min^{-1}	
150	7,5 - 28	50	50		4+4	4	22	5200 - 8900	**020661**
160	4 - 13	30			4	4	35	5000 - 10700	**020667** ●
220	5 - 30	30	35		4+4	4	55	3500 - 6000	**020662** ●

● available ex stock
□ available at short notice
Instruction manual visit www.leitz.org













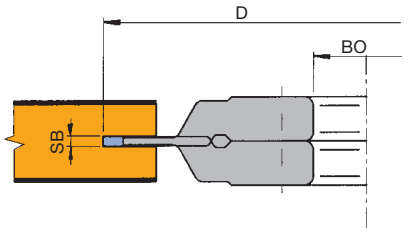

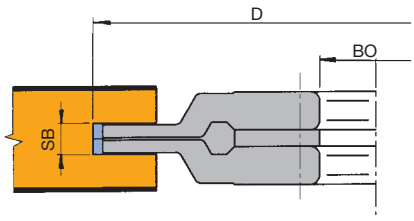

Application examples of grooving in the middle layer

Grooving cutterset, adjustable with spacers

Application:
For cutting different groove widths. 2 part design.

Machine:
Spindle moulders, moulders, edgebanding machines and double-end tenoners.

Workpiece material:
Uncoated, coated and veneered wood derived materials.

Technical information:
Adjustment of cutting width with spacers (adjustment 0.10 mm). Diamaster PRO design. Tip height 3.0 mm.

2 part; Diamaster PRO; SB 5.0 - 9.5 mm
SF 501 1 DP

D	SB	BO	BO_{max}	NT	Z	n	ID
mm	mm	mm	mm	mm		min^{-1}	
180	5,0 - 9,5	30	50	25	4/4	4300 - 7400	**090301** ●









HW

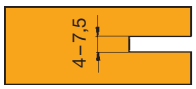

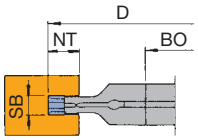

Grooving cutterhead set, 2 part design

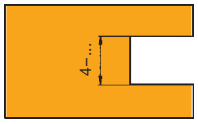

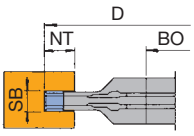

Grooving cutterhead set, multi part design

Grooving cutterhead set adjustable with spacers

Application:
For cutting different groove widths.

Machine:
Spindle moulders, moulders, edgebanding machines and stationary routers with/without CNC control, double-end tenoners.

Workpiece material:
Solid wood along grain and across grain; uncoated, coated and veneered wood derived materials in top layer and middle layer.

Technical information:
Adjustment of cutting widths with spacers (adjustment 0.10 mm).

2 part; SB 4.0 - 7.5 mm
SW 501 1 01

D mm	SB mm	BO mm	BO_{max} mm	NT mm	Z	n min^{-1}	ID
150	4,0 - 7,5	30	50	20	2/2	5200 - 10100	**128100** ●
180	4,0 - 7,5	30	50	35	2/2	4300 - 8400	**128101** ●

Extension parts SB 3.8 mm
WW 200 1 NN

D mm	SB mm	BO mm	BO_{max} mm	Z	n min^{-1}	ID
150	3,8	30	50	2	5200 - 10100	**128130**
180	3,8	30	50	2	4300 - 8400	**128131**

Each extension part increases the cutting widths by 3.6 mm.

Spare knives:

Part-no.	BEZ	ABM mm	QAL	VE PCS	ID
1	Turnblade knife	18x18x1,95	HW	10	**005114** ●
2	Turnblade spur VS4	14x14x1,2	HW	10	**005130** ●

Spare parts:

Part-no.	BEZ	ABM mm	ID
3	Special nut for VS	9,9x1,60/M4	**005654** ●
4	Special nut for WPL	11,9x2,2/M4	**005653** ●
5	Countersink screw, Torx® 9	M4x0.5x3.2	**006057** ●
6	Torx® key	Torx® 9	**005463** ●
	Setting gauge for knives	0,3/0,8	**005374** ●

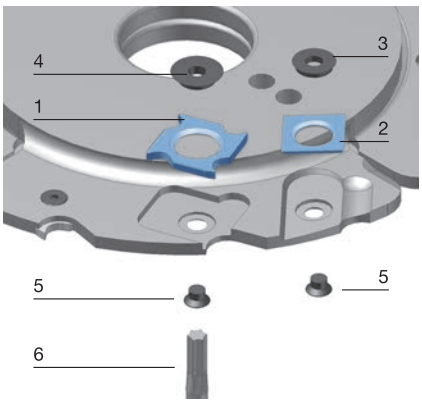

● available ex stock
□ available at short notice
Instruction manual visit www.leitz.org









HW

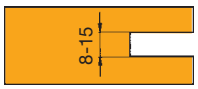

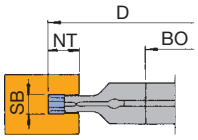

Grooving cutterhead set, 2 part design

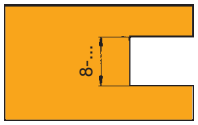

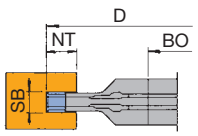

Grooving cutterhead set, multi part design

Grooving cutterhead set adjustable with spacers

Application:
For cutting different groove widths.

Machine:
Spindle moulders, moulders, edgebanding machines and stationary routers with/without CNC control, double-end tenoners.

Workpiece material:
Solid wood along grain and across grain; uncoated, coated and veneered wood derived materials.

Technical information:
Adjustment of cutting widths with spacers (adjustment range 0.1 mm). Multi part design.

Multi part; SB 8.0 - 30.0 mm
SW 501 1, SW 501 1 01

D mm	SB mm	BO mm	NT mm	Z	n min^{-1}	ID
150	8,0 - 15,4	30	20	2/2	5200 - 10100	**128104** ●
180	8,0 - 15,4	30	35	2/2	4300 - 8400	**128105** ●
200	8,0 - 15,4	30	45	2/2	3900 - 7600	**128106** ●
220	8,0 - 30,0	30	58	2/2	3500 - 6000	**024663** ●

Extension part
SW 501 1, WW 200 1 NN

D mm	SB mm	BO mm	BO_{max} mm	Z	n min^{-1}	ID
150	7,7	30	50	2	5200 - 10100	**128134**
180	7,7	30	50	2	4300 - 8400	**128135** ●
200	7,7	30	50	2	3900 - 7600	**128136** ●
220	15	30	45	2	3500 - 6000	**024666** ●

Spare knives:

Part-no.	BEZ	ABM mm	QAL	VE PCS	ID
1	Turnblade knife	7,7x8x1,5	HW-05	10	**005053** ●
1	Turnblade knife	14,7x8x1,5	HW-05	10	**005056** ●
2	Turnblade spur VS1	14x14x2	HW-F	10	**005099** ●
2	Turnblade spur VS2	19x19x2	HW-F	10	**005115** ●

Spare parts:

Part-no.	BEZ	ABM mm	ID
3	Clamping wedge	7x18,75x8,27	**009763** ●
3	Clamping wedge	13x18,75x8,27	**630203** ●
4	Allen screw with shank, Torx® 15	M5x20	**007380** ●
4	Clamping screw w. disc, Torx® 20	M5x18.5	**007446** ●
5	Torx® key	Torx® 15	**117507** ●
5	Torx® key	Torx® 20	**117503** ●
6	Countersink screw, Torx® 20	M6x0.5x4.9	**006243** ●
5	Torx® key	Torx® 20	**117503** ●
	Setting gauge for knives	0,3/0,8	**005374** ●

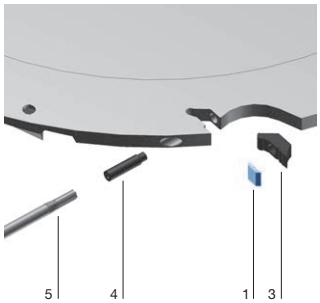

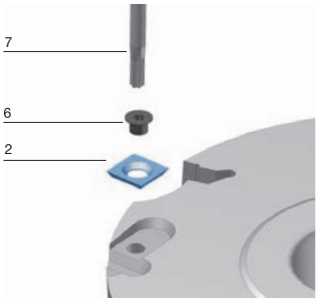









HW

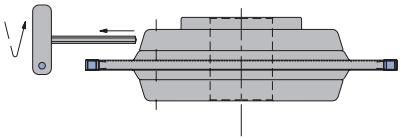

Opening the clamping system

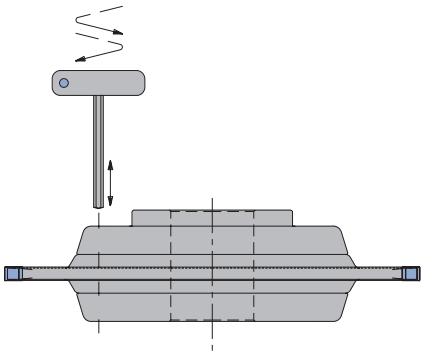

Adjustment: SB larger „+“,
SB smaller „-“

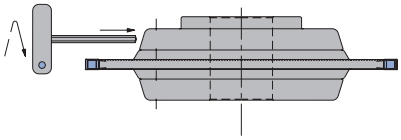

Closing the clamping system

After the tool is mounted on the spindle it can be adjusted and clamped using a hexagon key

Grooving cutterhead - steplessly adjustable

Application:
For cutting different groove widths.

Machine:
Spindle moulders, moulders, edgebanding machines and double-end tenoners.

Workpiece material:
Solid wood; uncoated, coated and veneered wood derived materials.

Technical information:
Stepless adjustment of cutting width possible when installed on machine. 2 part design.

Mounted on sleeve; SB 4.0 - 15.0 mm
SW 502 1 01

D mm	SB mm	BO mm	BO_{max} mm	NT mm	Z	n min^{-1}	ID
180	4,0 - 7,5	30	35	40	2/2	4300 - 8400	**128154** ●
180	8,0 - 15,0	30	35	40	2/2	4300 - 8400	**128155** ●
180	4,0 - 7,8	40	50	35	2/2	4300 - 8400	**128156**
180	8,0 - 15,0	40	50	35	2/2	4300 - 8400	**128157**

Spare knives:

Part-no.	BEZ	ABM mm	QAL	VE PCS	ID
1	Turnblade knife	18x18x1,95	HW	10	**005114** ●
2	Turnblade knife	7,7x8x1,5	HW-30F	10	**005068** ●
3	Turnblade spur VS4	14x14x1,2	HW	10	**005130** ●
4	Turnblade spur VS2	19x19x2	HW-F	10	**005115** ●

Spare parts:

Part-no.	BEZ	ABM mm	ID
5	Special nut for WPL	11,9x2,2/M4	**005653** ●
6	Special nut for VS	9,9x1,60/M4	**005654** ●
7	Countersink screw, Torx® 9	M4x0.5x3.2	**006057** ●
8	Countersink screw, Torx® 20	M6x0.5x4.9	**006243** ●
9	Allen screw with shank, Torx® 15	M5x20	**007380** ●
10	Clamping wedge	7x18,75x8,27	**009763** ●
11	Torx® key	Torx® 20	**117503** ●
12	Torx® key	Torx® 9	**005463** ●
13	Torx® key	Torx® 15	**117507** ●
	Setting gauge for knives	0,3/0,8	**005374** ●

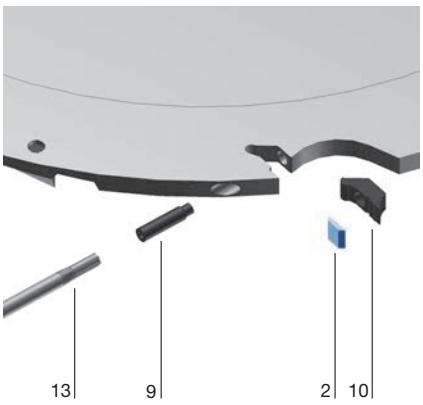

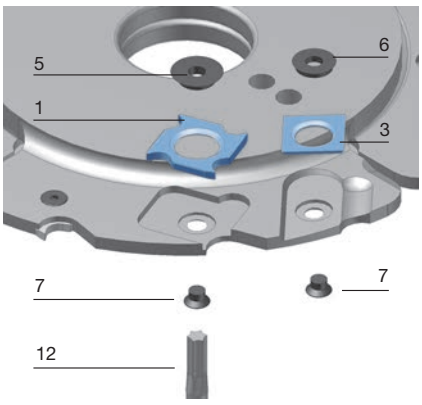

● available ex stock
□ available at short notice
Instruction manual visit www.leitz.org









HW

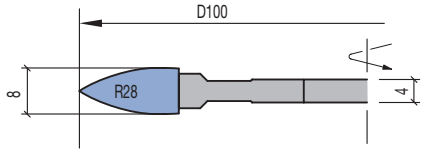

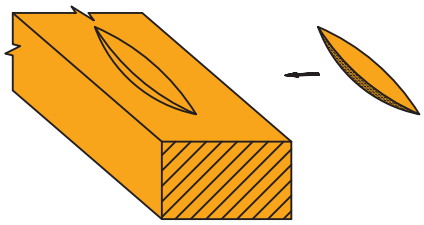

Profile cutter - pitch pockets

Application:
Optimized for milling pitch pockets.

Machine:
Portable machine Lamello Standard and Lamello Top.

Workpiece material:
Softwood and hardwood.

Technical information:
Two reciprocal cutting knives.

Radii profile
WF 502 1

D mm	SB mm	BO mm	BEM	Z	ID
100	8	22	Size 1-3	1+1	**020126** ●

RPM: n = 7700 - 13000 min^{-1}

Type of operation	Rebate tools cut on the periphery and the side. The rebated edge is produced by spurs.
Workpiece material	Softwood and hardwood, glulam, chipboard and fibre materials, uncoated, veneered, plastic and paper coated. Plastics and foams.
Machines	Spindle moulders. Edgebanding machines; double-end tenoners. Four-sided moulders.
Application	Jointing and rebating against feed: all panel materials with or without coating. Jointing and rebating with feed: machining solid wood with heavily twisted fibres and risk of tear outs. Only for machines with mechanical feed. Note: Difficult chip removal. Jump cutting: jointing with or against feed across grain to avoid tear outs at the front and rear workpiece edges after edgebanding or lipping.

Tool design

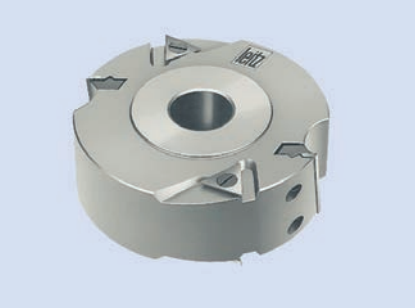

Turnblade rebating cutterhead with alternate shear angle:
Reduced feed and cutting forces achieve clean and tear out free rebating edges. Suitable for all coated and uncoated panel materials as well as solid wood.



2 part tools with alternate shear angle:
Can also be used as adjustable grooving tools.

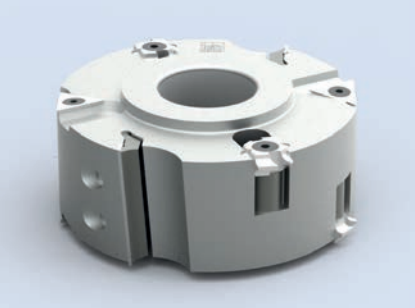

Turnblade rebating cutterhead with additional knives (edge knives):
Multi-purpose tool for jointing, rebating and rounding/bevelling.

Feed speed depending on RPM and no. of teeth

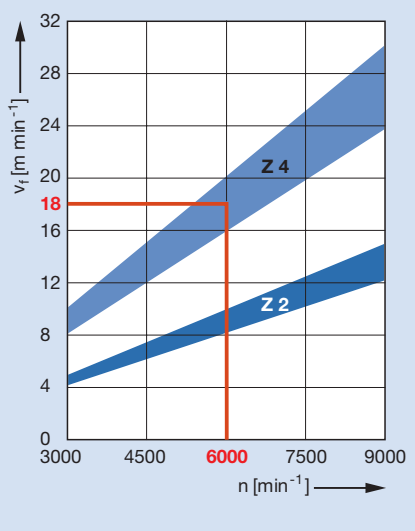

Relation between surface quality and length of knife marks $f_{z\,eff}$

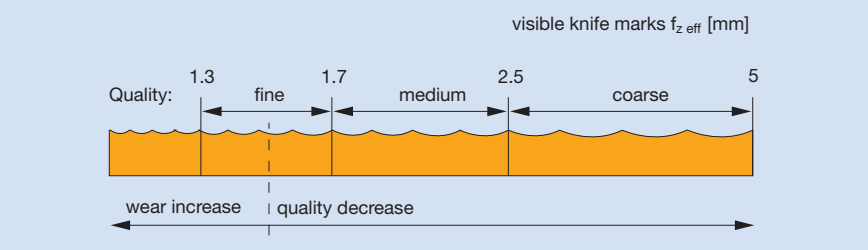

With multi blade tools, only the marks of one knife show on the surface (one knife finish).
Z 2 and Z 4 tools produce the same surface quality with the same machine setting.
High numbers of teeth are required for a high hogging performance.

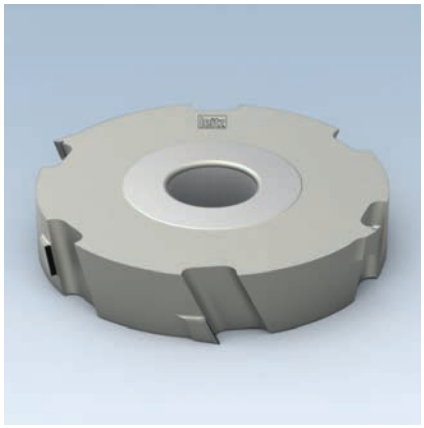

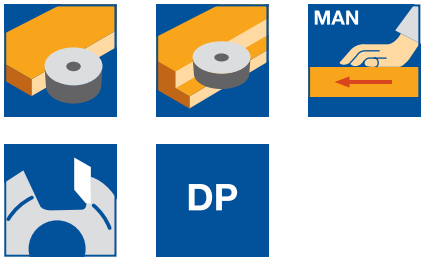

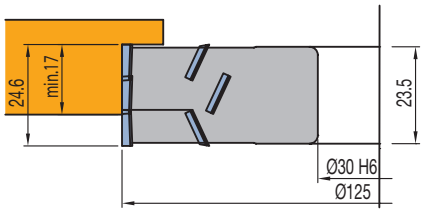

Jointing cutter ID **090853**
Rebate height min. 17 mm

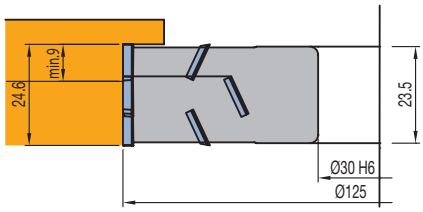

Jointing cutter ID **090872**
Rebating height min. 9 mm

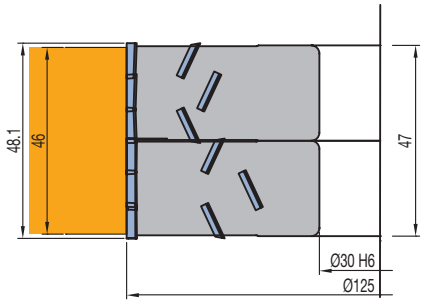

Set existing of ID **090853 and** ID **090872**

Jointing and rebating cutter Diamaster PRO

Application:
Optimized for rebating and jointing with and against feed (e.g. jump cutting). Manual feed only against feed.

Machine:
Spindle moulders and edgebanding machines, double-end tenoners.

Workpiece material:
Softwood and hardwood, chipboard and fibre materials (MDF, HDF etc.) uncoated, laminated veneer lumber (plywood etc.), plastomers, solid surface material (Corian, Varicor etc.) fibre reinforced plastics (GFRP, CFRP etc.).

Technical information:
Composite tool with alternate shear angle and main blades with pre-cutting function. Long performance times through polished cutting area. Diamaster PRO design for two resharpening cycles with standard wear. Double sided rebating possible. For larger cutting widths a stacking of various tools is possible. 3.5 mm tipping height. 1.5 mm resharpening area.

Diamaster PRO
WF 400 1 DP

D mm	SB mm	BO mm	Z	ID
125	24,6	30	2/2/2	**090853** ●
125	24,6	30	2/2/2	**090872** ●

RPM: n = 6200 - 13600 min^{-1}

● available ex stock
□ available at short notice
Instruction manual visit www.leitz.org

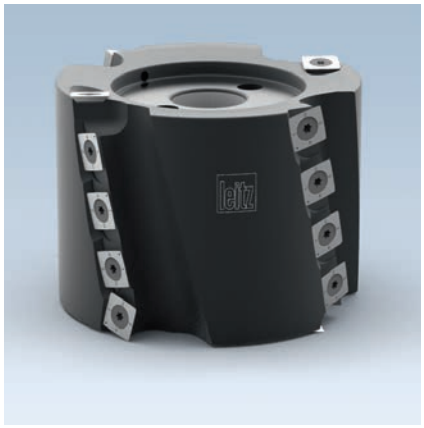











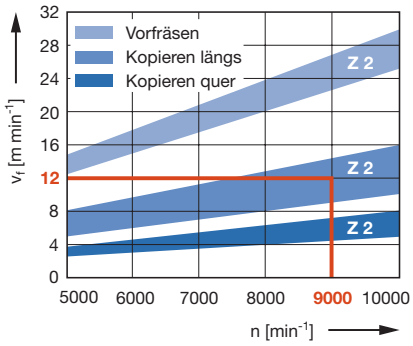

Feed speed v_f depending on the number of teeth Z and speed n for solid wood (pre trimming and copy shaping)
Example for tool diameter 125 mm:
n = 9000 min^{-1}
Z 2
Application: copy shaping along the grain
v_f = 12 m min^{-1}

Copy shaping cutterhead - HeliCut 15

Application:
For pre-cutting, jointing and copy shaping of large cutting depths. For copy shaping of curved workpieces with template, ball bearing and guide ring.

Machine:
Spindle moulders and profile milling machines, double-end tenoner, stationary routers with and without CNC control.

Workpiece material:
Softwood and hardwood, glulam, chipboard and fibre materials (MDF etc.) uncoated, plastic coated, veneered etc.

Technical information:
Noise reduced design with staggered edges and very deep gullets for improved chip removal. Tungsten carbide cutting edges with Microfinish for perfect surface quality. Rebate tools cut on the periphery and the side.

Cutterhead for copy shaping, grooving and rebating
WW 230 1 07

D mm	SB mm	BO mm	Z	V	QAL	AM PCS	ID
60	81,5	20	2	2	HW-MF	16	**132600** ●
80	81,5	30	2	2	HW-MF	16	**132608** ●
125	93,7	30	2	2+2	HW-MF	20	**132604** ●
125	116,6	30	2	2+2	HW-MF	24	**132605** ●

RPM: D 60 mm: n_{max} = 20000 min^{-1}
D 80 mm: n_{max} = 18000 min^{-1}
D 125 mm: n_{max} = 12000 min^{-1}

Spare knives:

BEZ	ABM mm	QAL	BEM	VE PCS	ID
Turnblade knife	15x15x2,5	HW-MF	HeliCut 15	10	**009543** ●
Turnblade knife	15x15x2,5	HW	HeliCut 15	10	**009549** ●

Spare parts:

BEZ	ABM mm	for D mm	ID
Countersink screw, Torx® 20	M5x12	60	**007898** ●
Countersink screw, Torx® 20	M5x14.2-8.8	80	**007394** ●
Countersink screw, Torx® 20	M5x18	125	**114030** ●
Torx® key	Torx® 20		**006091** ●

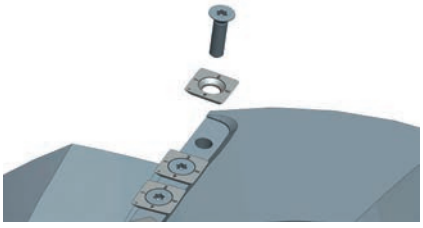

● available ex stock
□ available at short notice
Instruction manual visit www.leitz.org

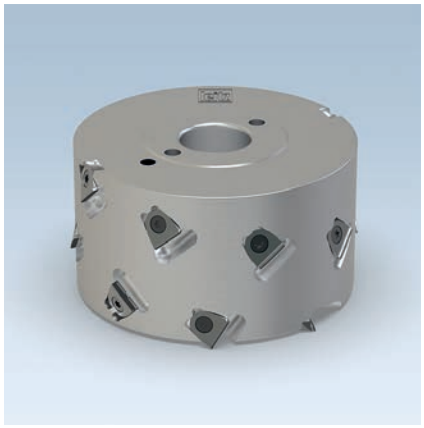

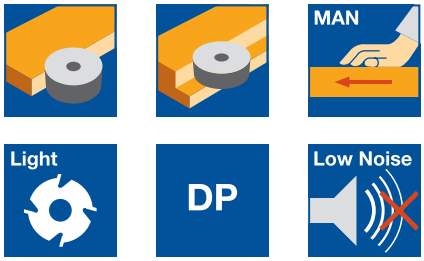

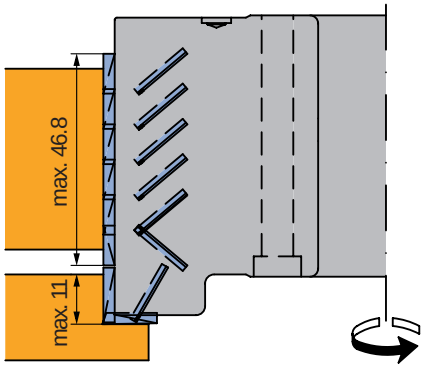

Diamaster WhisperCut EdgeExpert jointing and rebating cutterhead

Jointing and rebating cutterhead WhisperCut EdgeExpert

Application:
Optimized for noise reduced rebating and jointing particularly for sensitive decorative papers, foil coatings and veneers.

Machine:
Spindle moulders and edgebanding machines.

Workpiece material:
Chip and fibre boards (MDF etc.) raw, veneered, painted and coated; especially for plastic, paper, HPL and anti-fingerprint coatings. Also suitable for surfaces in mat, high gloss or with relief structures.

Technical information:
DP tipped cutterhead with alternate shear angle for tear-free jointing edges and cutting surface. With rebating knife for tear-free rebating edges (up to 11 mm rebating width). Increased shear angle for excellent edge quality on sensitive decorative papers, foil coatings and veneers. Noise reduced design with up to 5 dB(A) noise reduction. Significant weight reduction by using an aluminium alloy tool body. Carrier body for multiple use with exchangeable knives. 0.6 mm resharpening area.

Diamaster WhisperCut EdgeExpert - LowNoise, aluminium alloy tool body
WM 430 2 01

D mm	SB mm	BO mm	n_{max} min^{-1}	Z	DRI	ID
125	59,8	30	13700	2/2	RH	**192309** ●













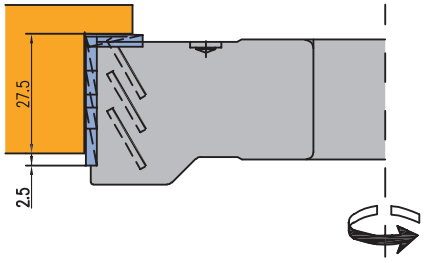

Rebating cutterhead WhisperCut PRO

Application:
Optimized for noise reduced rebating of abrasive materials.

Machine:
Spindle moulders.

Workpiece material:
Abrasive materials, chip and fibre board (MDF etc.) uncoated, veneered, plastic and paper coated, fibre reinforced plastics (GFRP, CFRP etc.).

Technical information:
DP tipped rebating cutterhead for tear-free edges on sensitive decorative papers, foil coatings and veneers. Noise reduced design with up to 5 dB(A) noise reduction. Significant weight reduction by using an aluminium alloy tool body. Carrier body for multiple use with exchangeable knives. 0.6 mm resharpening area.

Diamaster WhisperCut PRO - LowNoise, aluminium alloy tool body
WM 430 1 01

D mm	SB mm	BO mm	n_{max} min^{-1}	Z	V	DRI	ID
125	27,5	30	13700	2	2	RH	**192355** ●

● available ex stock
□ available at short notice
Instruction manual visit www.leitz.org

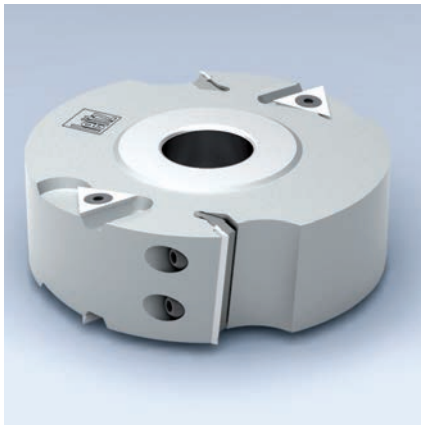



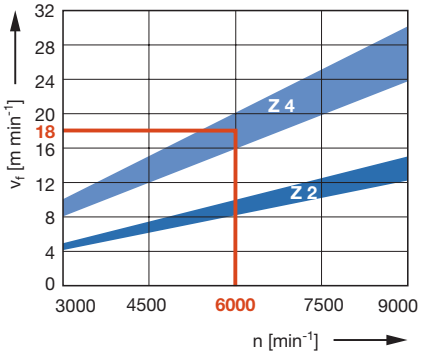

Feed speed v_f depending on the number of teeth Z and speed n for solid wood along grain
Example:
n = 6000 min^{-1}, Z 4: v_f = 18 m min^{-1}

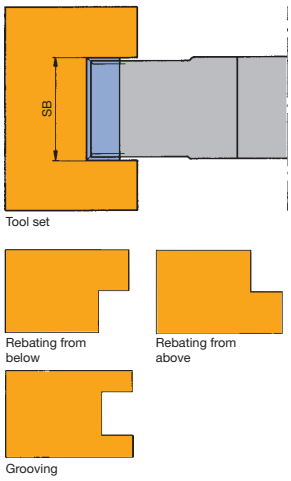

Rebating cutterhead

Application:
For jointing, rebating and grooving.

Machine:
Spindle moulders (running against feed), double-end tenoners, edgebanding machines etc. (running with feed or against feed e.g. jump cutting). Stationary routers with/without CNC control.

Workpiece material:
Softwood and hardwood, glulam, plastics etc.

Technical information:
Cutterhead with alternate shear angle and triangular spurs.

Turnblade rebating cutterhead
WW 420 1, WW 420 1 02

D mm	SB mm	BO mm	BO_{max} mm	Z	V	n_{max} min^{-1}	ID
85	51	30	40	2	4	20200	**125704**
100	51	30	40	2	4	17100	**125705**
125	41	30	40	2	4	13700	**125706** ●
125	51	30	50	2	4	13800	**125707** ●
125	51	40	50	2	4	13800	**125708** □
125	51	50	50	2	4	13800	**125709** □
125	81	30	50	2	4	13700	**125710** ●
150	51	30	40	2	4	11400	**125711** ●
150	61	30	50	4	4	11400	**125712** ●

Spare knives:

Part-no.	BEZ	ABM mm	QAL	VE PCS	ID
1	Turnblade knife Marathon	40x8x1,5	HW-30F MC	10	**601608** ●
1	Turnblade knife Marathon	50x8x1,5	HW-30F MC	10	**601610** ●
1	Turnblade knife Marathon	60x8x1,5	HW-30F MC	10	**601611** ●
1	Turnblade knife Marathon	80x8x1,5	HW-30F MC	10	**601613** ●
2	Turnblade spur VS2	19x19x2	HW-F	10	**005115** ●

Alternative turnblade knife qualities see section Knives and Spare Parts

Spare parts:

Part-no.	BEZ	ABM mm	ID
3	Clamping wedge	38x18,75x8,27	**630209** ●
3	Clamping wedge	48x18,75x8,27	**630211** ●
3	Clamping wedge	58x18,75x8,27	**630212** ●
3	Clamping wedge	78x18,75x8,27	**630214** ●
4	Countersink screw, Torx® 20	M5x8.5	**007808** ●
5	Clamping screw w. disc, Torx® 20	M5x18.5	**007446** ●
6	Torx® key	Torx® 20	**117503** ●
	Setting gauge for knives	0,3/0,8	**005374** ●

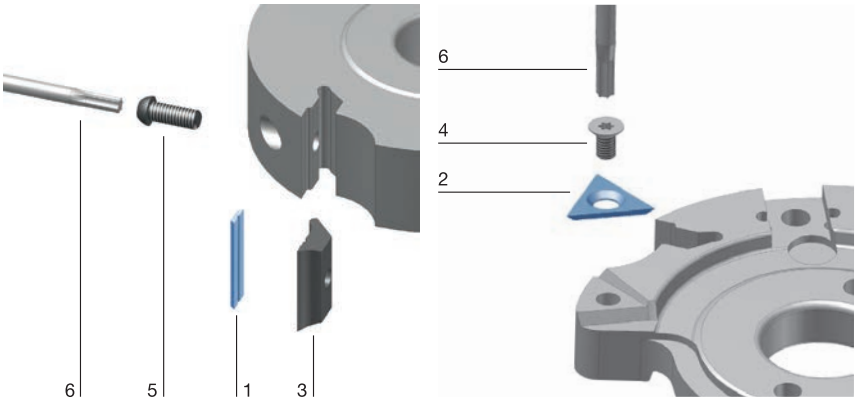

● available ex stock
□ available at short notice
Instruction manual visit www.leitz.org











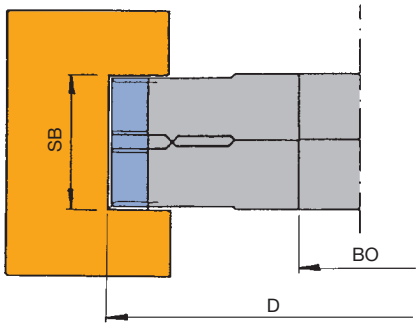

Tool set



Rebating from below



Rebating from above

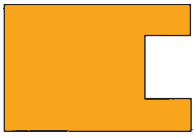

Grooving

Rebating cutterset, 2 part design

Application:
For jointing, rebating and grooving.

Machine:
Spindle moulders (running against feed), double-end tenoners and edgebanding machines etc. (running with feed or against feed).

Workpiece material:
Softwood and hardwood, glulam, plastics etc.

Technical information:
2 part with spacers adjustable tool set with alternate shear angle and triangular spurs.

SB 26.4 - 98 mm
SW 531 1 01

D mm	SB mm	VSB	BO mm	BO_{max} mm	Z	V	n min^{-1}	ID
160	20	26,4 - 38	30	45	4	4	4900 - 9500	**126204** ●
160	20	26,4 - 38	50	50	4	4	4900 - 9500	**126205** □
160	50	56,4 - 98	40	45	4	4	4900 - 9500	**126206**

Spare knives:

Part-no.	BEZ	ABM mm	QAL	VE PCS	ID
1	Turnblade knife Marathon	19,7x8x1,5	HW-30F MC	10	**601604** ●
1	Turnblade knife Marathon	50x8x1,5	HW-30F MC	10	**601610** ●
1	Turnblade knife Marathon	30x8x1,5	HW-30F MC	10	**601606** ●
2	Turnblade spur VS2	19x19x2	HW-F	10	**005115** ●

Spare parts:

Part-no.	BEZ	ABM mm	ID
3	Clamping wedge	18x18,75x8,27	**630204** ●
3	Clamping wedge	48x18,75x8,27	**630211** ●
3	Clamping wedge	28x18.75x8.27	**630206** ●
4	Countersink screw, Torx® 20	M6x0.5x4.9	**006243** ●
5	Clamping screw w. disc, Torx® 20	M5x18.5	**007446** ●
6	Torx® key	Torx® 20	**117503** ●
	Setting gauge for knives	0,3/0,8	**005374** ●

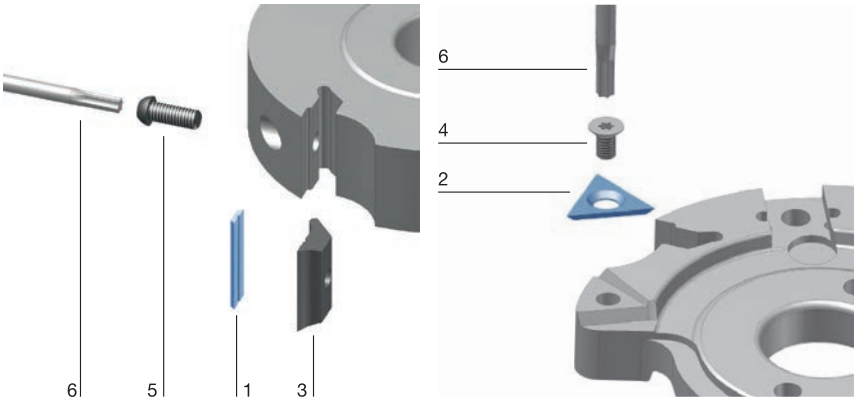

● available ex stock
□ available at short notice
Instruction manual visit www.leitz.org

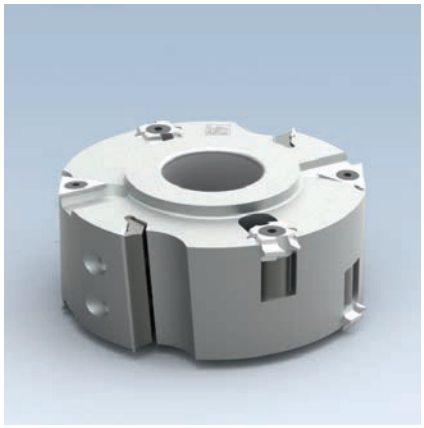

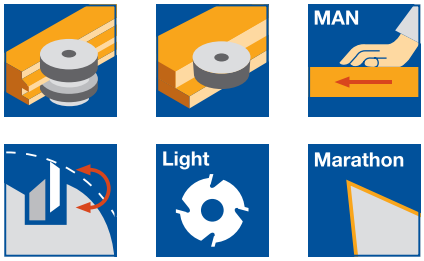

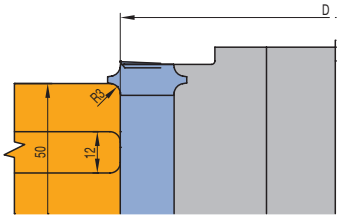

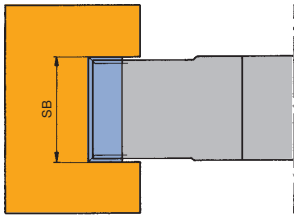

Tool set



Rebating from below



Rebating from above

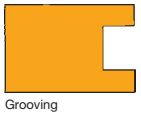

Grooving

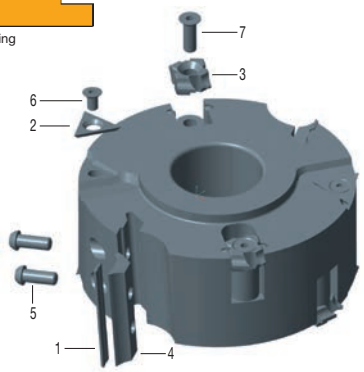

Jointing and rebating cutterhead

Application:
For rebating and jointing, rounding and profiling at the same time.

Machine:
Spindle moulders and moulders, double-end tenoners. Stationary routers with/without CNC control.

Workpiece material:
Softwood and hardwood, glulam, plastics etc.

Technical information:
Cutterhead with turnblade knives. With alternate shear angle, triangle spurs and seating to adapt edging knives.

Cutterhead with seatings for edging knives
WW 420 1 01

D mm	SB mm	BO mm	Z	KM PCS	n min^{-1}	QAL	ID
125	51	30	2	4	6200 - 10600	MC	**125683** ●
125	101	30	2	4	6200 - 10600	MC	**125684**
170	51	30	2	4	4500 - 7800	MC	**125685** ●

Spare knives:

Part-no.	BEZ	ABM mm	R mm	FAW °	QAL	VE PCS	ID
1	Turnblade knife Marathon	50x8x1,5			HW-30F MC	10	**601610** ●
2	Turnblade spur VS2	19x19x2			HW-F	10	**005115** ●
3	Edging knife 45°	KM 21/0		45	HW-F		**008292** ●
3	Edging knife R1.5	KM 22/4	1,5		HW-F		**008295** ●
3	Edging knife R2	KM 22/3	2		HW-F		**008309** ●
3	Edging knife R3	KM 22/0	3		HW-F		**008293** ●
3	Edging knife R5	KM 24/0	5		HW-F		**008305** ●
3	Edging knife R5	KM 24/1	5		HW-F		**008306** ●

Spare parts:

Part-no.	BEZ	ABM mm	ID
4	Clamping wedge	48x18,75x8,27	**630211** ●
5	Clamping screw w. disc, Torx® 20	M5x18.5	**007446** ●
6	Countersink screw, Torx® 20	M5x8.5	**007808** ●
7	Countersink screw, Torx® 20	M6x30	**006089** ●
	Torx® key	Torx® 20	**117503** ●
	Setting gauge for knives	43x12x6	**005350** ●
	Spacer	13/6,1x0,1	**028034** ●
	Spacer	13/6,1x0,3	**028035** ●
	Spacer	13/6,1x0,5	**028036** ●
	Spacer	13/6,1x1	**028037** ●
	Spacer	13/6,1x3	**028040** ●
	Spacer	13/6,1x5	**028042** ●

Edging knife set: 2 edging knives each + countersunk screw + set of spacers
TE 540 0

BEZ	FAW °	R mm	QAL	ID
Edge cutterset	45°		HW	**009091** ●
Edge cutterset		1,5	HW	**009092** ●
Edge cutterset		3	HW	**009093** ●
Edge cutterset		5	HW	**009097** ●
Edge cutterset		5	HW	**009098** ●

● available ex stock
□ available at short notice
Instruction manual visit www.leitz.org









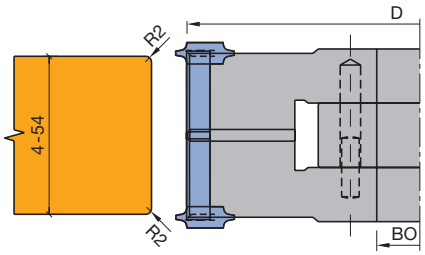

Jointing, rounding

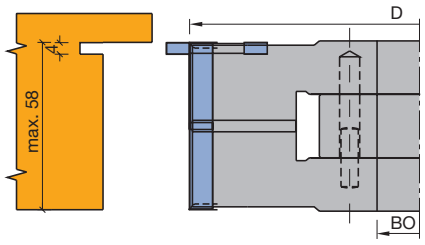

Rebating and seal groove

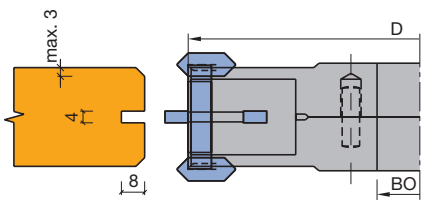

Groove and chamfers

Rebate cutterset UniCut

Application:
For rebating, jointing, grooving, bevelling and rounding.

Machine:
Spindle moulders, moulders etc.

Workpiece material:
Softwood and hardwood, glulam, plastics etc.

Technical information:
2 part with spacers adjustable tool set for multi-purpose application.

With seatings for edging knives and turnblade grooving knives; SB 30 - 60 mm
AW 330 1 01

Tool no.	D mm	SB mm	BO mm	BO_{max} mm	Z	V	n min^{-1}	ID
1 + 2	160	30 - 60	30	50	2/2	2/2	4900 - 8300	**126207** ●
1 + 2	160	30 - 60	40		2/2	2/2	4900 - 8300	**126208** □

Tool complete with edge rounding knife R 2.
Additionally:
2 grooving knives SB 4 mm with countersunk screws
1 set of spacers D 70 mm for adjusting the tool parts
1 set of spacers D 13.70 mm to adjust the edging/grooving knives
1 setting gauge 0.3/0.8 mm
Tool set in wooden box, BO 30.

Spare knives:

Part-no.	BEZ	ABM mm	QAL	VE PCS	ID
1	Turnblade knife Marathon	30x8x1,5	HW-30F MC	10	**601606** ●
2	Turnblade spur VS2	19x19x2	HW-F	10	**005115** ●
3	Edging knife 45°	KM 21/0	HW-F		**008292** ●
3	Edging knife R2	KM 22/3	HW-F		**008309** ●
4	Turnblade grooving knife NB4	36x20x4	HW-F		**008323** ●

Spare parts:

Part-no.	BEZ	ABM mm	ID
5	Clamping screw w. disc, Torx® 20	M5x18.5	**007446** ●
6	Countersink screw, Torx® 20	M6x30	**006089** ●
7	Countersink screw, Torx® 20	M6x0.5x4.9	**006243** ●
8	Clamping wedge	28x18.75x8.27	**630206** ●
9	Torx® key	Torx® 20	**117503** ●
	Setting gauge for knives	0,3/0,8	**005374** ●

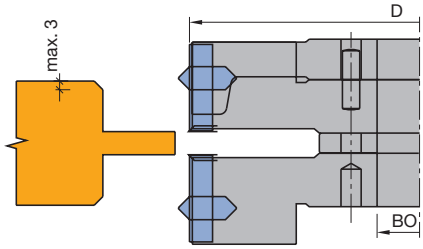

Tongue profile

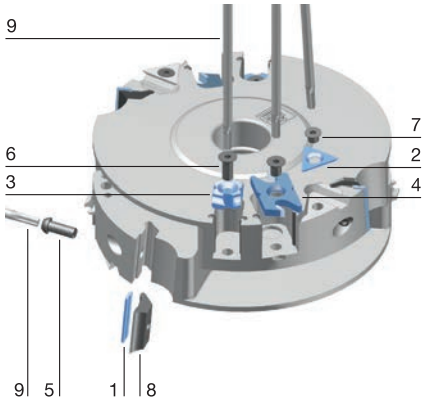

● available ex stock
□ available at short notice
Instruction manual visit www.leitz.org









HW

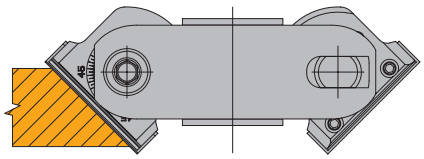

Bevelling from above

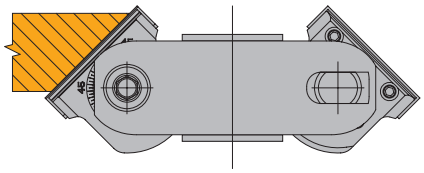

Bevelling from below

Bevel cutterhead turnblade, swivelling

Application:
For jointing and bevelling with adjustable bevel angle.

Machine:
Spindle moulders, moulders, edgebanding machines, double-end tenoners and special machines.

Workpiece material:
Softwood and hardwood, laminated veneer lumber, plastomers, limited suitable for MDF and chipboad (uncoated or coated).

Technical information:
Knife holder swivelling adjustable from 0 - 90°. Quick and easy angle adjustment of common angles (15°, 30°, 45°, 60°) by additional locking positions in 15° steps. Free of marks cutting result due to 1-part, continuous cutting edge. Economical due to changeable tungsten carbide turnblades with two cutting edges. Optimized gullet design for improved chip removal.

Turnblade, adjustable bevel angle
WW 430 1 05

D mm	SB mm	BO mm	BO_{max} mm	Swivel range °	n min^{-1}	Z	ID
150	50	30	40	0 - 90	5000 - 9000	2	**024169** ●
150	50	31,75	40	0 - 90	5000 - 9000	2	**024170** □
150	50	40	40	0 - 90	5000 - 9000	2	**024171** □
170	50	50	60	0 - 90	5000 - 9000	2	**024172** □

Spare knives:

Part-no.	BEZ	ABM mm	QAL	VE PCS	ID
1	Turnblade knife	50x12x1,5	HW-05F	10	**005086** ●

Spare parts:

Part-no.	BEZ	ABM mm	ID
2	Clamping wedge with pin	48x10,88x6	**009766** ●
3	Allen screw	M6x12	**006035**
	Allen key	SW 3	**005433** ●
	Allen key	SW 8, L 100	**005437** ●
	Setting gauge for knives	43x12x6	**005350** ●

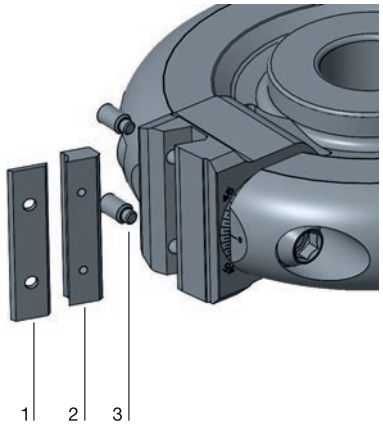



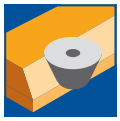





HW

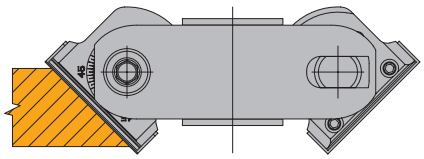

Bevelling from above

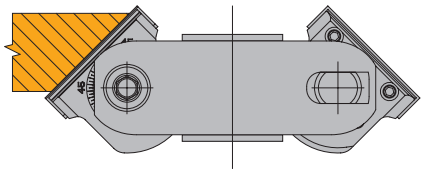

Bevelling from below

Bevel cutterhead HeliCut, swivelling

Application:
For jointing and bevelling with adjustable bevel angle.

Machine:
Spindle moulders, moulders, edgebanding machines and double-end tenoners.

Workpiece material:
Softwood and hardwood, laminated veneer lumber, plastomers, technical foams (XPS, PU), limited suitable for MDF and chipboard (uncoated or coated).

Technical information:
Knife holder can be swivelled steplessly on both sides from 0 - 65°. Quick and easy adjustment of conventional angles (15°, 30°, 45°, 60°) due to additional locking positions in 15° steps. Design with divided cutting edges and optimized gullet areas for low-noise working with low cutting pressure even at high cutting performance. Workpiece edges free of tear-out on both sides even in critical materials due to alternating tool angle. Cutting edges with particularly precise geometry and polishing for long tool life and machining of „soft“ materials. Economical due to partially exchangeable solid carbide blades with 4 cutting chamfers.

HeliCut, adjustable bevel angle
WW 430 1 05

D mm	SB mm	BO mm	BO_{max} mm	Swivel range °	n min^{-1}	Z	ID
150	55	30	40	0 - 65	5000 - 9000	1/1	**024290** ●
150	55	31,75	40	0 - 65	5000 - 9000	1/1	**024262** □
150	55	40	40	0 - 65	5000 - 9000	1/1	**024264** □
170	55	50	60	0 - 65	5000 - 9000	1/1	**024273** □

Spare knives:

Part-no.	BEZ	ABM mm	ID
1	Turnblade knife	15x15x2,5	**009543** ●

Spare parts:

Part-no.	BEZ	ABM mm	ID
2	Countersink screw, Torx® 20	M5x12	**007898** ●
	Torx® key	Torx® 20	**006091** ●
	Allen key	SW 8, L 100	**005437** ●

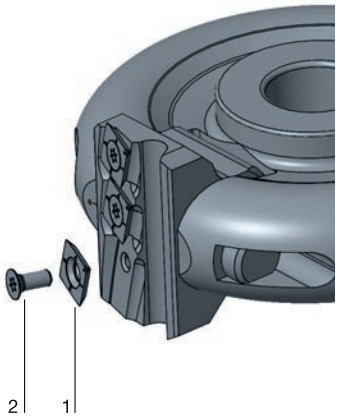

● available ex stock
□ available at short notice
Instruction manual visit www.leitz.org








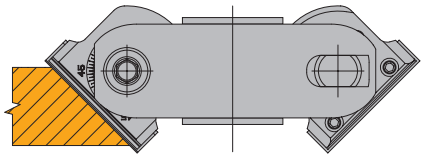

Bevelling from above

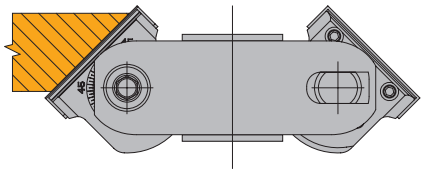

Bevelling from below

Bevel cutterhead WhisperCut, swivelling

Application:
For jointing and bevelling with adjustable bevel angle.

Machine:
Spindle moulders, moulders, edgebanding machines and double-end tenoners.

Workpiece material:
Hardwood, chip and fibre board (chipboard, MDF, HDF etc.), plastic coated, veneered etc., laminated veneer lumber (plywood, multiplex plywood etc.), solid surface material (e.g. Corian®, Varicor® etc.), fibre reinforced plastics (e.g. GRP, CFRP).

Technical information:
Knife holder swivelling adjustable from 0 - 65°. Quick and easy angle adjustment of common angles (15°, 30°, 45°, 60°) by additional locking positions in 15° steps. Workpiece edges tear-free on both sides due to alternatinv shear angles. Economical due to partial change of diamond cutting edges. Noice reduced design with optimized gullet design for improved chip removal.

WhisperCut, adjustable bevel angle
WW 430 1 05

D mm	SB mm	BO mm	BO_{max} mm	Swivel range °	n min^{-1}	Z	ID
150	55	30	40	0 - 65	5000 - 9000	1/1	**024291** ●
150	55	31,75	40	0 - 65	5000 - 9000	1/1	**024263** □
150	55	40	40	0 - 65	5000 - 9000	1/1	**024265** □
170	55	50	60	0 - 65	5000 - 9000	1/1	**024274** □

Spare knives:

Part-no.	BEZ	ABM mm	ID
1	WhisperCut-knife SB14	14x14.2x4.3	**091074** ●

Spare parts:

Part-no.	BEZ	ABM mm	ID
2	Countersink screw, Torx® 20/59°	M5x11.5	**007899** ●
	Torx® key	Torx® 20	**006091** ●
	Allen key	SW 8, L 100	**005437** ●

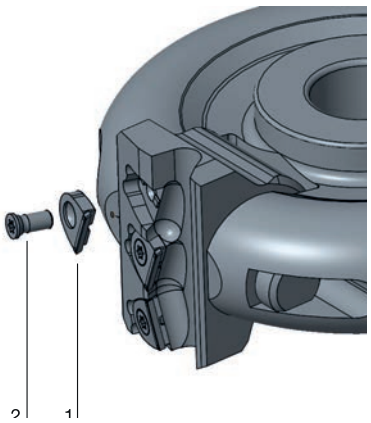

● available ex stock
□ available at short notice
Instruction manual visit www.leitz.org

Types of operation	The tools in the following section are suitable for producing glue joints, divided into glue joints (along the grain) and mitre joints.
	Glue joints along grain Glue joint profiles for length grain glue joints have a low profile depth to minimise the material loss at each glue joint. Glue joint profiles do not increase the stability of the glue joint. The profile is used to position the wood precisely, so it does not slip during pressing. Length grain glue joint profiles are not self-locking. The workpieces must remain pressed together until the glue has hardened completely. Profile tools for glue joints along the grain are not suitable for mitre joints.
Workpiece material	Softwood and hardwood.
Machine	Spindle moulders with or without power feed. Four-sided moulders. Double-end tenoners.
Application	Against the feed, always along the grain.
	Mitre joint Solid wood and wood-derived materials cannot be glued on the end faces side without glue joint profiles. Compared to glue joints along the grain, mitre glue joint profiles increase the stability of the joint. These profiles have a greater profile depth, generally 10 mm. Mitre joint profiles must have a straight edge area to create a defined straight joint in the visible area. The profiles are slightly self-locking. This means the workpieces needs to be pressed together briefly and can only be machined after the glue has hardened. Mitre joints are typically used to produce segments for arched windows or profiled mouldings.
Workpiece material	Softwood and hardwood.
Machine	Spindle moulders with clamping device and sliding table. Double-end tenoners. Window machines. Stationary routers with or without CNC control.
Application	Against feed, across or along the grain.

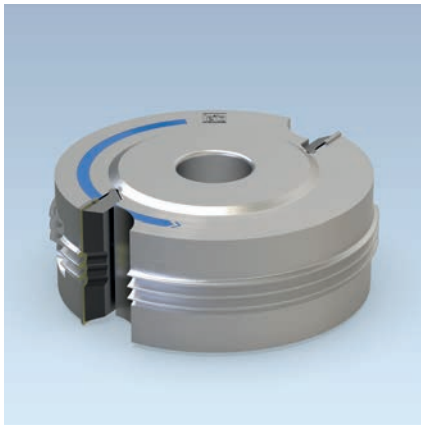









Mitre joint/longitudinal glue joint profile

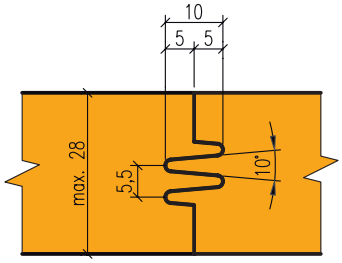

P1

Width glue joint profile

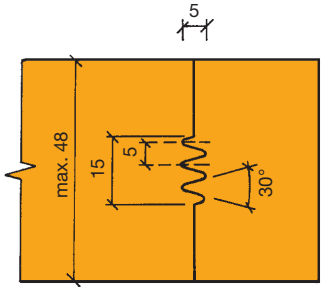

P2

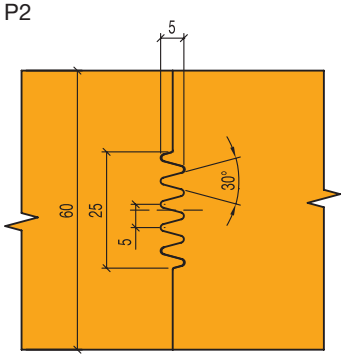

P3

Profile cutterhead ProfilCut Q for glue joint profiles

Application:
To cut glue joint profiles with high fit accuracy. Profile P2-4 for processing with the grain for precise positioning of the wood to be glued. Profile 1 is especially suitable for mitre joint profile/longitudinal glue joint profile and for frames.

Machine:
Spindle moulders and moulders.

Workpiece material:
Softwood and hardwood.

Technical information:
Finger profile in rounded design (softline). Effective wood use through small profile depth.

MAN feed
WE 600 1 53

P	D mm	SB mm	BO mm	BO_{max} mm	Z	n min^{-1}	ID
1	135	30	30	50	2	5700 - 9900	**125554** ●
2	135	50	30	50	2	5700 - 9900	**125555** ●
3	135	60	30	50	2	5700 - 9900	**125556** ●
3	135	60	50		2	5700 - 9900	**125557** □
4	135	80	30	50	2	5700 - 9900	**125558** ●

Spare knives:

Part-no.	BEZ	ABM mm	QAL	ID
1	ProfilCut Q knife	30x16x2	MC	**619237** ●
1	ProfilCut Q knife	50x16x2	MC	**619234** ●
1	ProfilCut Q knife	60x16x2	MC	**619235** ●
1	ProfilCut Q knife	80x16x2	MC	**619236**

Spare parts:

Part-no.	BEZ	ABM mm	ID
2	Clamping wedge profiled	48x23,73x8,27	**630147**
2	Clamping wedge profiled	58x23,73x8,27	**630148**
2	Clamping wedge profiled	78x23,73x8,27	**630149**
2	Clamping wedge profiled	28x23,73x8,27	**630150**
3	Clamping screw w. disc, Torx® 20	M5x18.5	**007446** ●
4	Torx® key	Torx® 20	**117503** ●

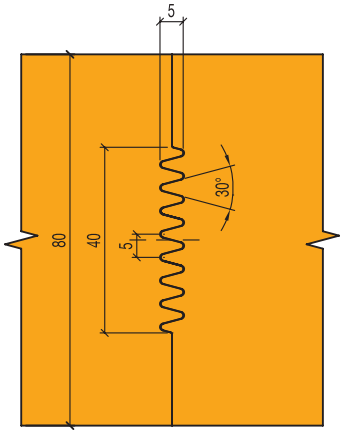

P4

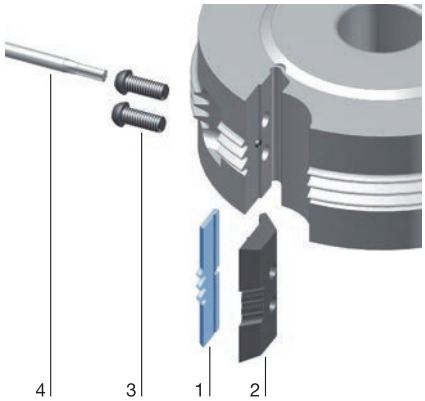

● available ex stock
□ available at short notice
Instruction manual visit www.leitz.org

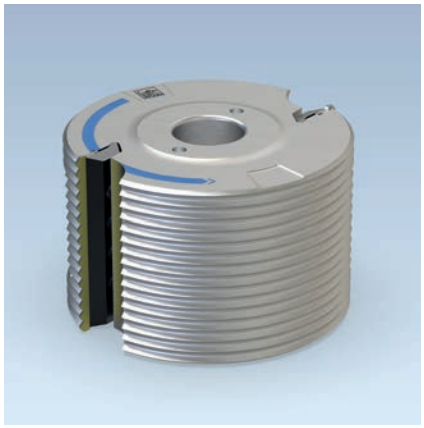









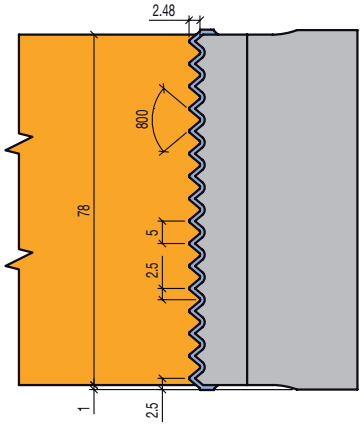

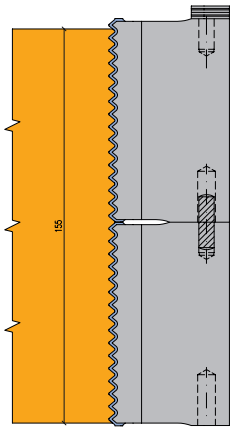

Tool stackable

Profile cutterhead ProfilCut Q for glue joint profiles

Application:
To cut glue joint profiles in fibre direction with high fit accuracy.

Machine:
Spindle moulders and moulders.

Workpiece material:
Softwood and hardwood.

Technical information:
Finger profile in rounded design (softline). Effective wood use through small profile depth.

Profile cutterhead set
SE 600 1 53

D mm	SB mm	BO mm	Z	ID
125	78	30	2	**126209** ●
125	78	50	2	**126210** ●

Spare knives:

Part-no.	BEZ	ABM mm	QAL	ID
1	ProfilCut Q knife	80.2x14x2.4	MC	**619523**

Spare parts:

Part-no.	BEZ	ABM mm	ID
2	Clamping wedge profiled	77x20x8.27	**630027**
3	Clamping screw w. disc, Torx® 20	M5x18.5	**007446** ●
4	Torx® key	Torx® 20	**117503** ●

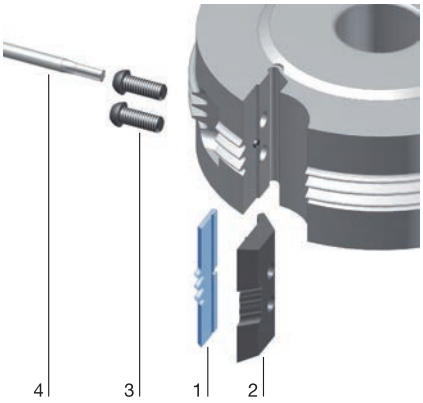

● available ex stock
□ available at short notice
Instruction manual visit www.leitz.org

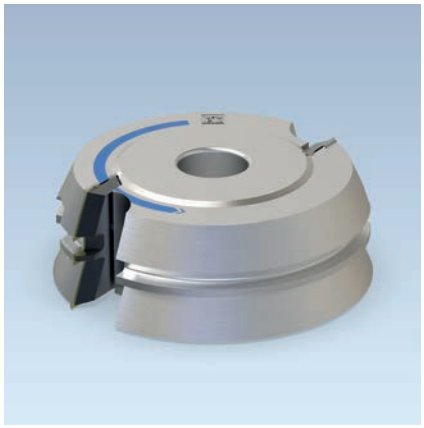



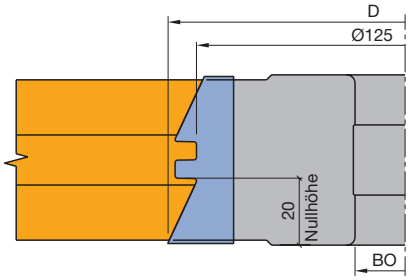

Adjustment scheme

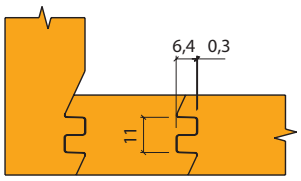

Profile example

Profile cutterhead ProfilCut Q for glue joints along the grain and mitre joints

Application:
For glue joint profiles along grain with precise positioning. Exact positioning of the wood to be glued together and for producing corner joints.

Machine:
Spindle moulders and moulders.

Workpiece material:
Softwood and hardwood, veneered panel materials.

Technical information:
Wood thickness 15 to 48 mm; basic clearance 0.3 mm, side clearance 0.1 mm. Economic wood use due to small profile depth.

Profile depth 6.4 mm
WE 600 1 53

D mm	SB mm	BO mm	BO_{max} mm	Z	n min^{-1}	ID
142	50	30	50	2	5500 - 9400	**125559**

Spare knives:

Part-no.	BEZ	ABM mm	QAL	ID
1	ProfilCut Q knife	50x22x2	MC	**619238**

Spare parts:

Part-no.	BEZ	ABM mm	ID
2	Clamping wedge profiled	47x30x8,27	**630152**
3	Clamping screw w. disc, Torx® 20	M5x18.5	**007446** ●
4	Torx® key	Torx® 20	**117503** ●

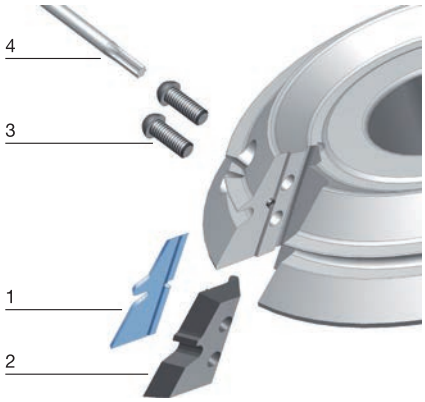





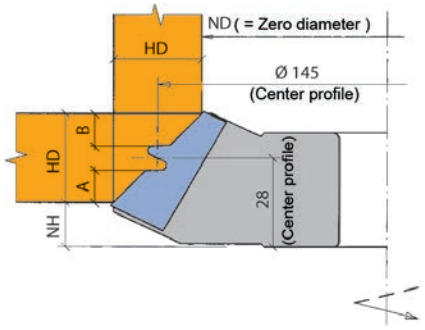

$$\text{0-height (NH)} = 28 - \frac{\text{wood thickness (HD)}}{2}$$

$$\text{0-diameter (ND)} = Ø\,145 - \text{wood thickness (HD)}$$

Profile cutterhead ProfilCut Q for glue joints along the grain and mitre joints

Application:
For 45° glue joint profiles along grain with precise positioning. Exact positioning of the wood to be glued together and for producing corner joints.

Machine:
Spindle moulders and moulders.

Workpiece material:
Softwood and hardwood, veneered panel materials.

Technical information:
Not suitable for melamine or paper coated panel materials.

Profile cutterhead ProfilCut Q 45°
WE 610 1 53

D mm	SB mm	HD mm	BO mm	Z	BO_{max} mm	n min^{-1}	ID
175	40	28	30	2	50	4400 - 7600	**125560** ●
175	40	28	50	2	50	4400 - 7600	**125561** □

Profile adjustment
Height adjustment by profiling the workpiece flat on the table and vertical against the fence:
Profile height: PH 8.00 mm
Correct adjustment, if dimension A is the same as dimension B.
Formula: A(B) = (HD-PH) / 2

Spare knives:

Part-no.	BEZ	ABM mm	QAL	ID
1	ProfilCut Q knife	40x22x2	MC	**619239** ●

Spare parts:

Part-no.	BEZ	ABM mm	ID
2	Clamping wedge profiled	37x30x8,27	**630153**
3	Clamping screw w. disc, Torx® 20	M5x18.5	**007446** ●
4	Torx® key	Torx® 20	**117503** ●

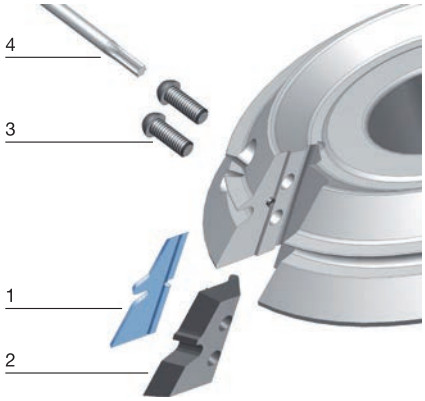

● available ex stock
□ available at short notice
Instruction manual visit www.leitz.org

Type of operation

Profiling in craft and industry. As there are many different applications, the features of the tool and the wood types to be processed are described in the respective product pages.

Feed speeds depending on RPM, length of knife marks and number of teeth

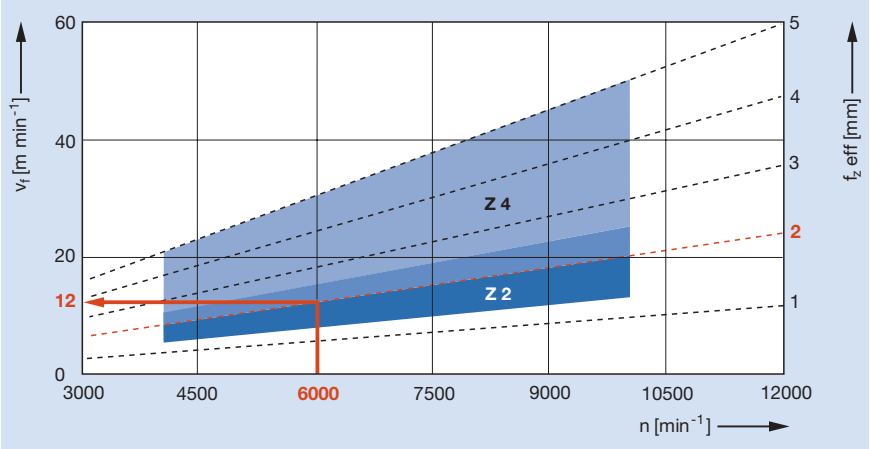

Relation between surface quality and length of knife marks $f_{z\ eff}$

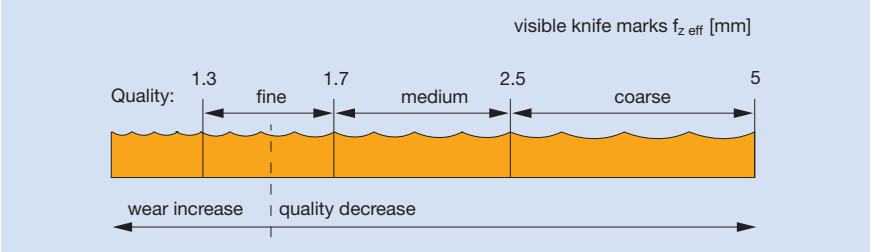

With multi blade tools, only the marks of one knife show on the surface (one knife finish).
Z 2 and Z 4 tools produce the same surface quality with the same machine setting.
High numbers of teeth are required for a high hogging performance.

Workpiece material
Machines
Application

Please refer to the relevant product pages, depending on the operation and profile.

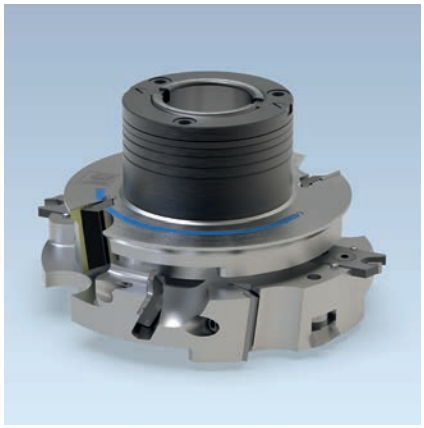










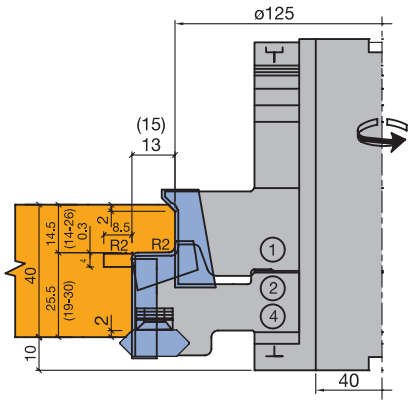

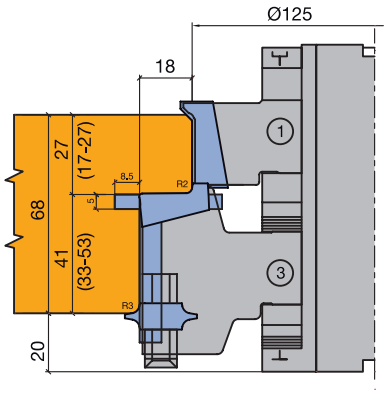

Turnblade ProfilCut Q profile cutterhead set for internal door production

Application:
For external door profiles with single rebate, rebating depth 13/15/18 mm. Extendable for double rebate 12/15 and 15/15.

Machine:
Spindle moulders and moulders.

Workpiece material:
Softwood and hardwood.

Technical information:
Combinable for front door, single and double rebate. Double rebate profiles by using additional tools. Tool body of aluminium. ProfilCut jointing cutterhead with chamfers to edges, rebate cutterhead with turnblade knives, spurs and seatings for edge knives and seal groove knives.

Turnblade / profile cutterhead set
SE 540 1 53

BEM	Tool no.	D_0 mm	BO mm	Z	FAT mm	n_{max} min^{-1}	ID
Single rebate	1/2	125	40	2	13	7200	**126211**
Single rebate	1/4	125	40	2	15	7200	**126212**
Single rebate	1/3	125	40	2	18	7200	**126213**
Double rebate	1/4/5	125	40	2	15/12	7200	**126214**
Double rebate	1/4/6	125	40	2	15/15	7200	**126215**

Set completely mounted on VDS-sleeve.

Single tools
TB 100 0 01, WE 500 1 53

BEZ	ABM mm	Tool no.	Z	ID
ProfilCut Q tool	133x30x50	1	2	**125562**
ProfilCut Q tool	151.2x35x50	2	2	**125563**
ProfilCut Q tool	161.2x54.5/58.5x50	3	2	**125564**
ProfilCut Q tool	155.2x35x50	4	2	**125565**
ProfilCut Q tool	179.2x35x50	5	2	**125566**
ProfilCut Q tool	185.2x35x50	6	2	**125567**
Reducing sleeve without collar	40x96x30			**028302** ●

Spare knives:

BEZ	ABM mm	Tool no.	QAL	ID
ProfilCut Q knife	30.2x14.1x2	1	MC	**619240**
ProfilCut Q knife	20.1x12.62x2	2	MC	**413043**
ProfilCut Q knife	25x12.76x2	3	MC	**413017**
ProfilCut Q knife	20.1x12.61x2	4	MC	**413045**
ProfilCut Q knife	20.1x11.89x2	5	MC	**413011**
ProfilCut Q knife	20.1x12.9x2	6	MC	**413015**
Turnblade knife Marathon	30x8x1,5	2/4/5/6	HW-05 MC	**601634** ●
Edging knife 45°	KM 21/0	2/4	HW-F	**008292** ●
Edging knife R2	KM 22/3	5/6	HW-F	**008309** ●
Edging knife R3	KM 22/0	3	HW-F	**008293** ●
Turnblade grooving knife NB4	36x20x4	2/4	HW-F	**008323** ●
Turnblade grooving knife NB5	36x20x5	2 - 6	HW-F	**008324** ●

● available ex stock
□ available at short notice
Instruction manual visit www.leitz.org

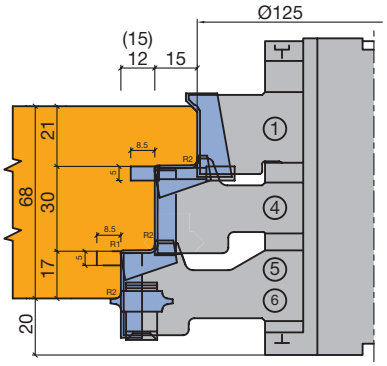

Spare parts:

BEZ	ABM mm	Tool no.	ID
Clamping wedge ProfilCut Q	27x20x8.27	1	**630017**
Clamping wedge ProfilCut Q	17x24,7x8,27	2/4/6	**630260**
Clamping wedge	28x18.75x8.27	2/4/5/6	**630206** ●
Clamping wedge ProfilCut Q	22x25,8x8,27	3	**630156**
Clamping wedge	48x18,75x8,27	3	**630211** ●
Clamping wedge ProfilCut Q	17x23,7x8,27	5	**630157**
Clamping screw w. disc, Torx® 20	M5x18.5	1 - 6	**007446** ●
Countersink screw, Torx® 20	M6x20	2/4	**006087** ●
Countersink screw, Torx® 20	M6x40	3	**006090** ●
Countersink screw, Torx® 20	M6x25	5/6	**006088** ●
Countersink screw, Torx® 20	M6x12	2 - 6	**006084** ●
Cylindrical screw with ISK	M6x93		**007834** ●
Torx® key	Torx® 20	1 - 6	**117503** ●
Allen key	SW 5		**005452** ●



R 1,5 = ID **619391**
R 2,0 = ID **619392**
R 3,0 = ID **619393**
R 4,0 = ID **619394**
R 5,0 = ID **619395**



ID **619396**



ID **619397**



ID **184008678**
Cut-out for DP edging knives on request





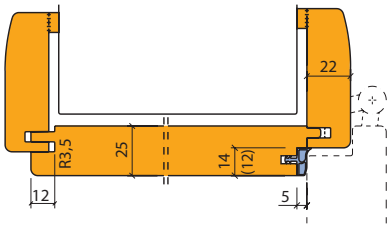

Door lining profile

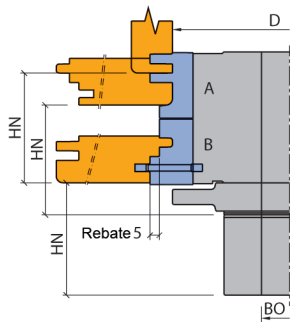

Lining/decorative panel and rebate lining

Profile cutterhead ProfilCut Q

Application:
For door casing and door linings with 5 mm rebate.

Machine:
Spindle moulders and moulders.

Workpiece material:
Softwood and hardwood, uncoated, plastic coated and veneered chipboard and fibre materials.

Technical information:
Material thickness: 24 to 27 mm (option up to 32 mm with jointing).
Seal 14 and 12 mm possible by fitting spacers. Adjustable rebate of 5 mm or 4 mm by changeable profile knives. Rebate 7 mm, 8 mm and 11 mm on request.

Rebate 5 mm
SE 640 1 53

Tool Type	D mm	BO mm	BO_{max} mm	Z	FAT mm	n min^{-1}	ID
With jointing and rounding	125	30	50	2	5	5100 - 8800	**126216** ●
Without jointing and rounding	125	30	50	2	5	5100 - 8800	**126217**

Rebate 4 mm
SE 640 1 53

Tool Type	D mm	BO mm	BO_{max} mm	Z	FAT mm	n min^{-1}	ID
With jointing and rounding	125	30	50	2	4	5100 - 8800	**126218**
Without jointing and rounding	125	30	50	2	4	5100 - 8800	**126219**

Spare knives:

Part-no.	BEZ	ABM mm	QAL	ID
1	ProfilCut Q knife A for jointing	35x22,75x2	MC	**619241**
1	ProfilCut Q knife B 5 mm rebate	35x23,82x2	MC	**619242**
1	ProfilCut Q knife A without jointing	35x22,75x2	MC	**619243**
1	ProfilCut Q knife B 4 mm rebate	35x23,29x2	MC	**619244**
6	Turnblade grooving knife NB4	36x20x4	HW-F	**008323** ●

Spare parts:

Part-no.	BEZ	ABM mm	ID
2	Clamping wedge A	32x27,9x8,27	**630158**
2	Clamping wedge B	32x32,7x8,27	**630159**
3	Clamping screw w. disc, Torx® 20	M5x18.5	**007446** ●
4	Torx® key	Torx® 20	**117503** ●
7	Countersink screw, Torx® 20	M6x12	**006084** ●

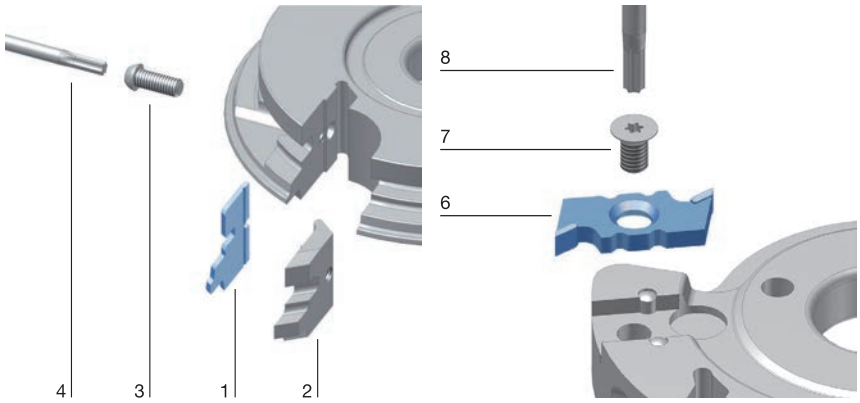

● available ex stock
□ available at short notice
Instruction manual visit www.leitz.org

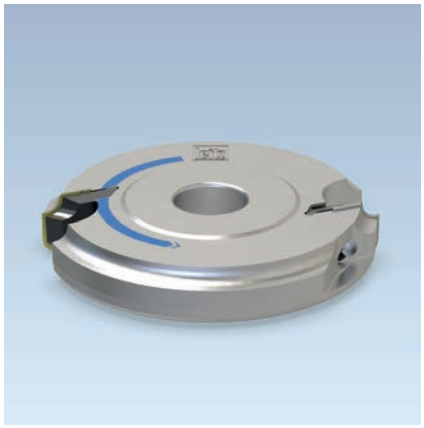











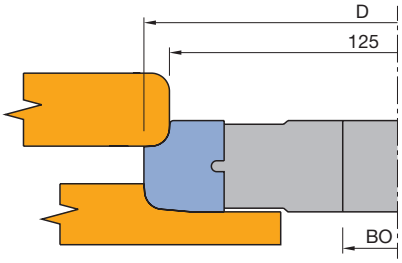

Radii profile cutterhead

Profile cutterhead ProfilCut Q

Application:
For different radii profiles with different profile knives. Copy shaping of curved workpieces using template and ball bearing guide ring.

Machine:
Spindle moulders and moulders.

Workpiece material:
Softwood and hardwood.

Technical information:
Production of counter profile possible by combining with the fluting profile. Tool can be used on both sides as panel raising cutter (straight panel raising).

Radii profile R 2; 3; 5; 7 mm
WE 500 1 53

R mm	D mm	SB mm	BO mm	BO_{max} mm	Z	n min^{-1}	ID
5	139	25	30	50	2	5500 - 9600	**125568** ●

Radii profile R 12; 15; 16; 18; 20 mm
WE 500 1 53

R mm	D mm	SB mm	BO mm	BO_{max} mm	Z	n min^{-1}	ID
12	167	40	30	50	2	4600 - 10200	**125569** ●

Spare knives:

R mm	Part-no.	BEZ	ABM mm	QAL	ID
2	1	ProfilCut Q knife	25x25x2.4	MC	**619504**
3	1	ProfilCut Q knife	25x25x2.4	MC	**619505**
5	1	ProfilCut Q knife	25x25x2.4	MC	**619501**
7	1	ProfilCut Q knife	25x25x2.4	MC	**619502**
12	1	ProfilCut Q knife	40x32.6x2.4	MC	**619516**
15	1	ProfilCut Q knife	40x32.6x2.4	MC	**619517**
16	1	ProfilCut Q knife	40x32.6x2.4	MC	**619518**
18	1	ProfilCut Q knife	40x32.6x2.4	MC	**619519**
20	1	ProfilCut Q knife	40x32.6x2.4	MC	**619520**

Spare parts:

Part-no.	BEZ	ABM mm	ID
2	Clamping wedge profiled	22x35x8,27	**630160**
2	Clamping wedge profiled	37x43x8,27	**630161**
3	Clamping screw w. disc, Torx® 20	M5x18.5	**007446** ●
4	Torx® key	Torx® 20	**117503** ●

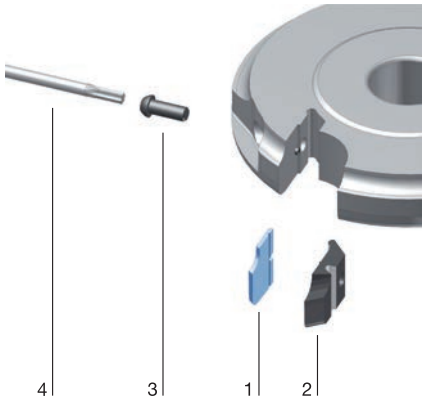

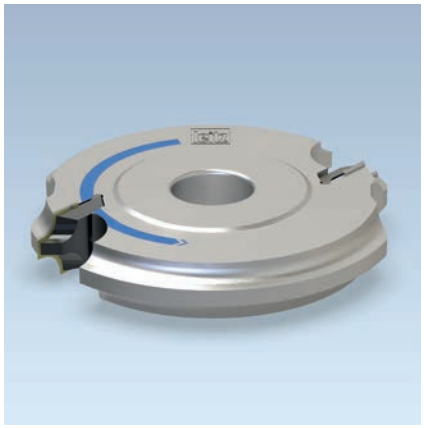



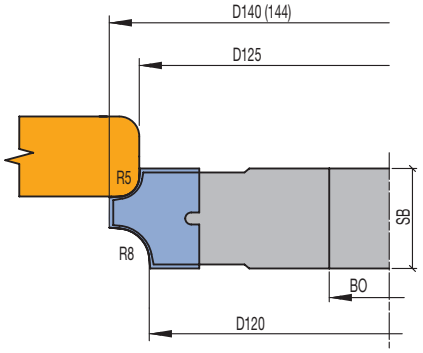

Profile cutterhead D-140(144) mm

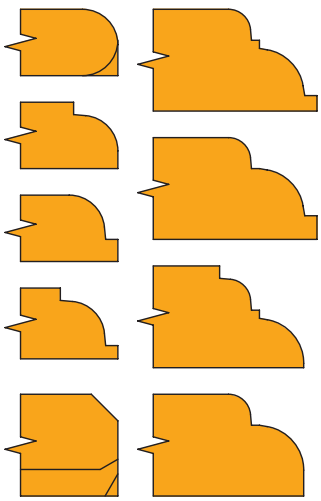

Left = 1 working step
Right = 2 working steps

Profile cutterhead set ProfilCut Q - radii profile

Application:
For different radii profiles with different profile knives. Copy shaping of curved workpieces using template and ball bearing guide ring.

Machine:
Spindle moulders and moulders.

Workpiece material:
Softwood and hardwood.

Technical information:
Cutterhead with changing knives R 5/8, R 6/9, R 7/10, R 3/12, bevelling knives 30/45/60° and axially parallel knives. For cutting radii and dowel profiles as well as bevelling and copy-shaping of curved workpieces using templates.

Radii profile R 5 - 12 mm or 30/45/60° bevel
AE 540 1 53

D mm	SB mm	BO mm	BO_{max} mm	R mm	FAW °	Z	ID
140	25	30	50	5/8 6/9 7/10 3/12	30/45/60	2	**126203** ●

Set completely in wooden box including radii/bevel knives.
Standard values for feed speed v_f at speed n = 6000 min^{-1}:
Machining along grain: 8 to 10 m min^{-1}.
Machining across grain: 3 to 5 m min^{-1}.
RPM: n = 5400 - 9200 min^{-1}
Zero diameter: 120/125 mm

Spare knives:

Part-no.	BEZ	ABM mm	QAL	R mm	FAW °	ID
1	ProfilCut Q knife	25x22x2	MC	5/8		**619445**
1	ProfilCut Q knife	25x22x2	MC	6/9		**619446**
1	ProfilCut Q knife	25x22x2	MC	7/10		**619447**
1	ProfilCut Q knife	29x24.17x2	MC	3/12		**619448**
1	ProfilCut Q knife	29x24.17x2	MC		30/45/60	**619449**

Spare parts:

Part-no.	BEZ	ABM mm	ID
2	Clamping wedge	22x30x8,27	**630146** ●
3	Clamping screw w. disc, Torx® 20	M5x18.5	**007446** ●
4	Torx® key	Torx® 20	**117503** ●

Ball bearing and guide rings - see Lexicon section Knives and Spare Parts.

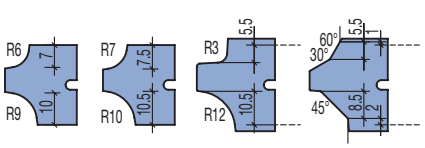

Profile knives radius / bevel

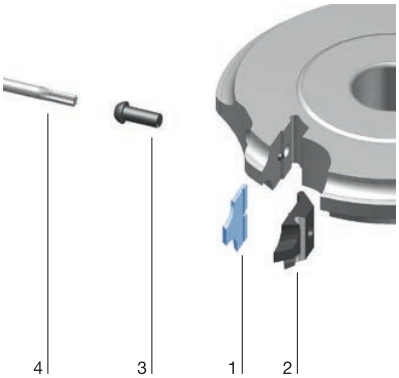

● available ex stock
□ available at short notice
Instruction manual visit www.leitz.org

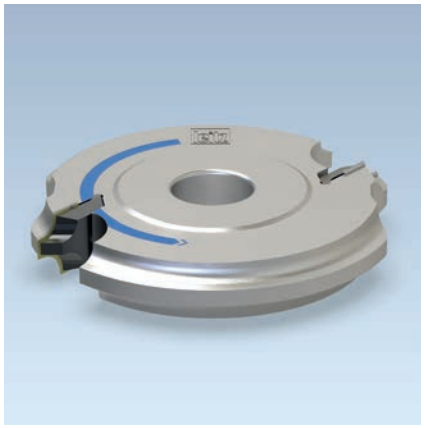











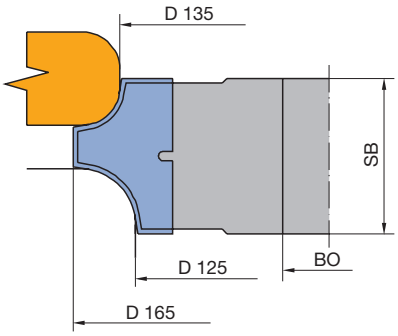

Profile cutterhead D-165 mm

Profile cutterhead ProfilCut Q

Application:
For radii and bevel profiles with different profile knives. Copy shaping of curved workpieces using template and ball bearing guide ring.

Machine:
Spindle moulders and moulders.

Workpiece material:
Softwood and hardwood.

Technical information:
Cutterhead with change knives and straight cut. Multi-purpose application for different profiles.

Radii profile R 12 - 20 mm or 45° bevel
WE 500 1 53

D mm	SB mm	BO mm	BO_{max} mm	Z	R mm	n min^{-1}	ID
165	50	30	50	2	12/18	5500 - 5900	**125570** ●

Spare knives:

Part-no.	BEZ	ABM mm	QAL	R mm	FAW °	ID
1	ProfilCut Q knife	50x33.8x2.4	MC	12/18		**619512**
1	ProfilCut Q knife	50x33.8x2.4	MC	14/20		**619513**
1	ProfilCut Q knife	50x33.8x2.4	MC		45	**619514**

Spare parts:

Part-no.	BEZ	ABM mm	ID
2	Clamping wedge profiled	47x29x8,27	**630162**
3	Clamping screw w. disc, Torx® 20	M5x18.5	**007446** ●
4	Torx® key	Torx® 20	**117503** ●

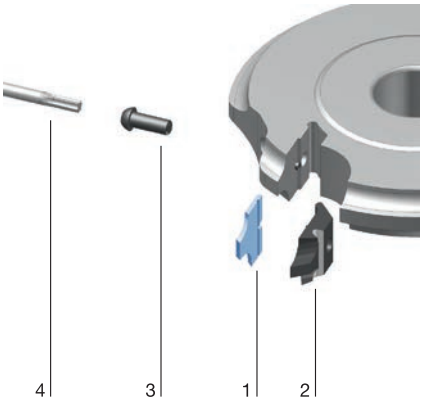

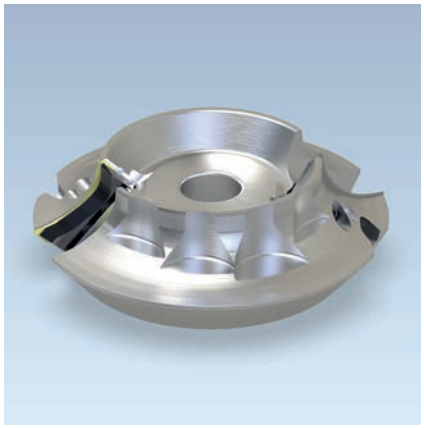



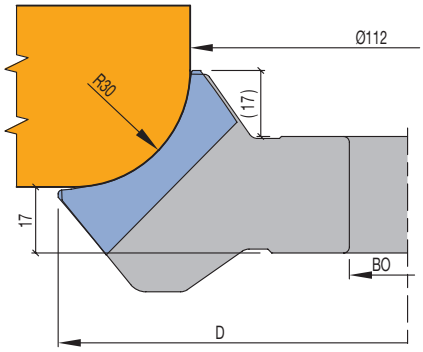

Profile cutterhead D-180 mm

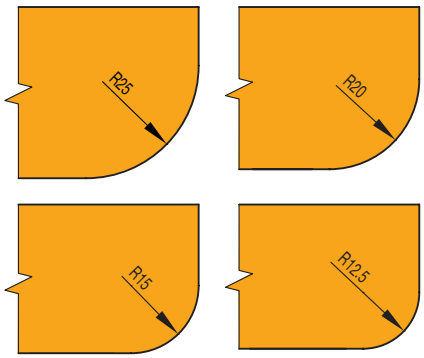

Profile cutterhead ProfilCut Q

Application:
For different radii profiles with different profile knives. Copy shaping of curved workpieces using template and ball bearing guide ring.

Machine:
Spindle moulders and moulders.

Workpiece material:
Softwood and hardwood.

Technical information:
Height and diameter adjustment through recess in the tool basic body per radius. Cutterhead extendable for radii R 12.5 - 30 mm. Replacement knives for dowel cuts on request.

Radii profile R 12.5 - 30 mm
WE 500 1 53

D	SB	BO	BO_{max}	D_0	Z	R	n	ID
mm	mm	mm	mm	mm		mm	min^{-1}	
180	32	30	50	112	2	30	4300 - 7400	**125571** ●

For ball bearings and guide rings see section Knives and Spare Parts.

Standard values for feed speed v_f:
Machining along grain: 8 to 10 m min^{-1}
Machining across grain: 3 to 5 m min^{-1}
at speed n = 6000 min^{-1}.

Spare knives:

Part-no.	BEZ	ABM	QAL	R	ID
		mm		mm	
1	ProfilCut Q knife	50x22x2	MC	12,5	**619431**
1	ProfilCut Q knife	50x22x2	MC	15	**619432**
1	ProfilCut Q knife	50x22x2	MC	20	**619433**
1	ProfilCut Q knife	50x22x2	MC	25	**619434**
1	ProfilCut Q knife	50x22x2	MC	30	**619430**

Spare parts:

Part-no.	BEZ	ABM	ID
		mm	
2	Clamping wedge profiled	47x29x8.27	**630163** □
3	Clamping screw w. disc, Torx® 20	M5x18.5	**007446** ●
4	Torx® key	Torx® 20	**117503** ●

Machine adjustment by recessing the tool.

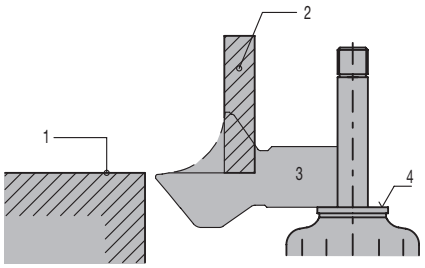

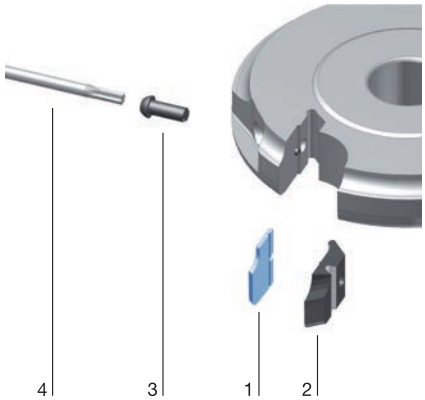

1 = Machine table
2 = Fence
3 = Tool
5 = Spindle

● available ex stock
□ available at short notice
Instruction manual visit www.leitz.org

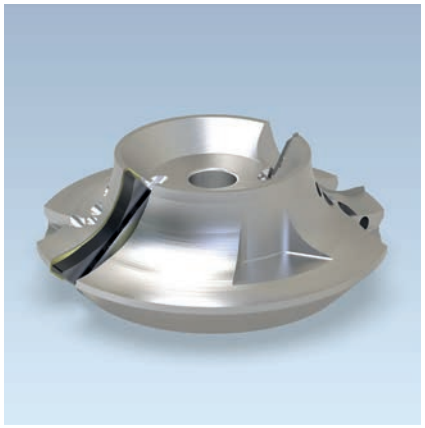



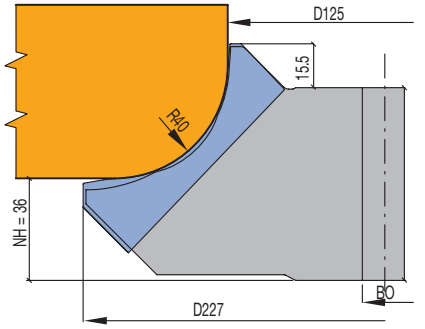

Profile cutterhead D-227 mm

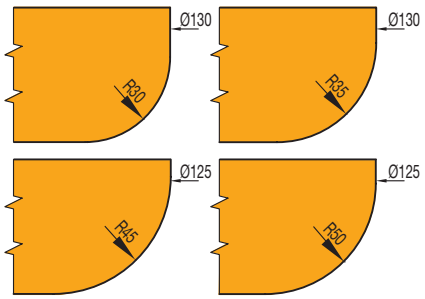

Profile cutterhead ProfilCut Q

Application:
For different radii profiles with 10 different profile knives. Copy shaping of curved workpieces using template and ball bearing guide ring.

Machine:
Spindle moulders and moulders.

Workpiece material:
Softwood and hardwood.

Technical information:
Height and diameter adjustment through recess in the tool basic body. Cutterhead extendable for radii R 30 - 50 mm. Replacement knives for dowel cuts on request.

Radii profile R 30 - 50 mm
WE 500 1 53

D mm	SB mm	BO mm	BO_{max} mm	D_0 mm	Z	R mm	n min^{-1}	ID
227	57	30	50	125	2	40	3400 - 7500	**125572** ●

For ball bearings and guide rings see section Knives and Spare Parts.

Spare knives:

Teile-Nr.	BEZ	ABM mm	QAL	R mm	ID with relief angle	ID without relief angle
1	ProfilCut Q knife	80.1x30.78x2	MC	30	**619436**	**619440**
1	ProfilCut Q knife	80.1x30.56x2	MC	35	**619437**	**619441**
1	ProfilCut Q knife	80.1x31.08x2	MC	40	**619435**	**619442**
1	ProfilCut Q knife	80.1x29.98x2	MC	45	**619438**	**619443**
1	ProfilCut Q knife	80.1x29.56x2	MC	50	**619439**	
1	ProfilCut Q knife	80.1x29.66x2	MC	50		**619444**

Spare parts:

Part-no.	BEZ	ABM mm	ID
2	Clamping wedge ProfilCut	77x39x8.27	**630164** □
3	Clamping screw w. disc, Torx® 20	M5x18.5	**007446** ●
4	Torx® key	Torx® 20	**117503** ●

Machine adjustment by recessing the tool.

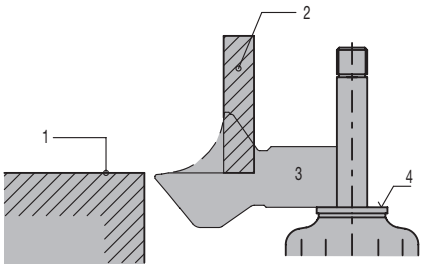

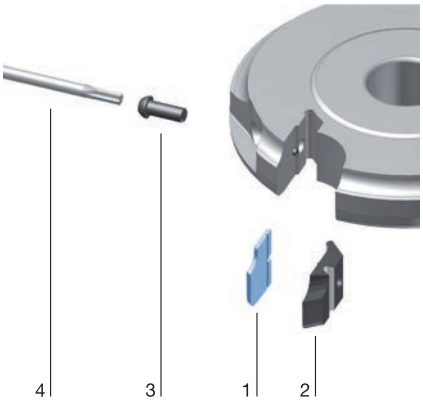

1 = Machine table
2 = Fence
3 = Tool
5 = Spindle













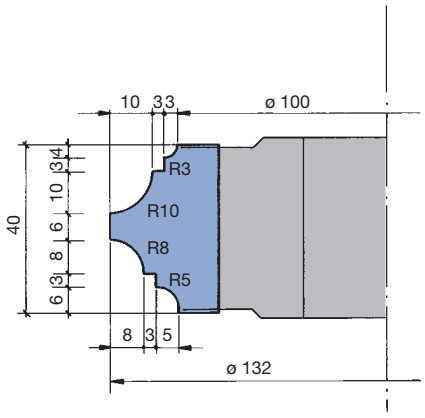

Profile cutterhead ProfilCut Q

Application:
For radii and counter profiles. Copy shaping of curved workpieces using template and ball bearing guide ring.

Machine:
Spindle moulders and moulders etc.

Workpiece material:
Softwood and hardwood.

Technical information:
Cutterhead with change knives, straight cut. Multi-purpose use for different profiles in one or several working steps.

Radii profile R 3 - 10 mm
WE 500 1 53

D mm	SB mm	BO mm	BO_{max} mm	Z	n min^{-1}	ID
132	40	30	40	2	5900 - 10100	**125573** ●

Standard values for feed speed v_f:
Machining along grain: 8 to 10 m min^{-1}
Machining across grain: 3 to 5 m min^{-1}
at speed n = 6000 min^{-1}
For ball bearings and guide rings see section Knives and Spare Parts.

Spare knives:

Part-no.	BEZ	ABM mm	QAL	ID
1	ProfilCut Q knife	40.2x28.5x2.4	MC	**619515**

Spare parts:

Part-no.	BEZ	ABM mm	ID
2	Clamping wedge profiled	37x34,5x8,27	**630165**
3	Clamping screw w. disc, Torx® 20	M5x18.5	**007446** ●
4	Torx® key	Torx® 20	**117503** ●

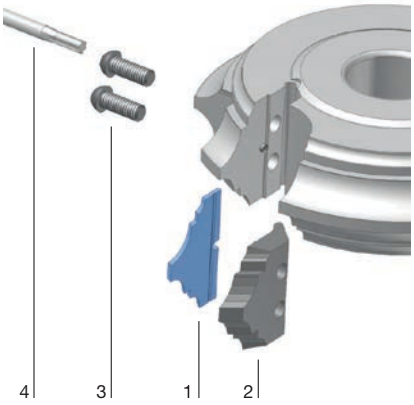

● available ex stock
□ available at short notice
Instruction manual visit www.leitz.org





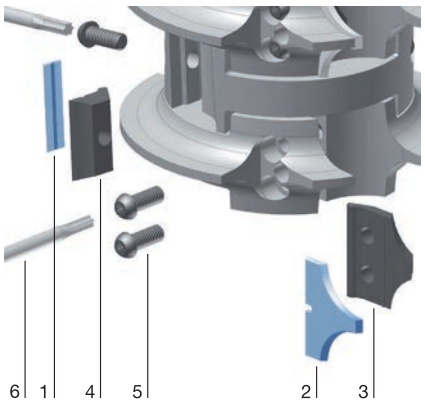

Profile cutterhead set ProfilCut Q - bevelling / rounding

Application:
Multi-purpose tool set for bevelling, rounding and jointing the workpiece edges at the same time.

Machine:
Spindle moulders, copy shaping and profile moulders.

Workpiece material:
Softwood and hardwood.

Technical information:
With a combination of jointing and bevelling/rounding cutterheads, different profiles and wood thicknesses can be machined. Profile knives with different radii/bevels can be mounted in one cutterhead.

Manual feed
SE 541 1 53

Tool Type	D_0 mm	AW PCS	n min^{-1}	Z	ID
Jointing-rounding	125	2	4200 - 7100	2	**126220**
Rounding-jointing-rounding	125	3	4200 - 7100	2	**126221**
Rounding-rounding	125	2	4200 - 7100	2	**126222**

Further radii are available at short notice.

Spare parts:

Part-no.	BEZ	ABM mm	Tool no.	ID
3	Clamping wedge	17x23x8,27	1/2/11/12	**630140**
3	Clamping wedge	32x28x8.27	3/4/13/14	**630141**
3	Clamping wedge	37x29,7x8,27	5/15	**630142**
3	Clamping wedge	37x29,7x8,27	6/16	**630143**
3	Clamping wedge	47x31,8x8,27	7/17	**630144**
3	Clamping wedge	47x31,8x8,27	8/18	**630145**
4	Clamping wedge	18x18,75x8,27	20	**630204** ●
4	Clamping wedge	33x18,75x8,27	35	**630208** ●
4	Clamping wedge	48x18,75x8,27	50	**630211** ●
5	Clamping screw w. disc, Torx® 20	M5x18.5		**007446** ●
6	Torx® key	Torx® 20		**117503** ●

Part nos. 1 and 2 - ProfilCut Q and turnblade knives - see detailed information on the following pages.

ID. **126220**

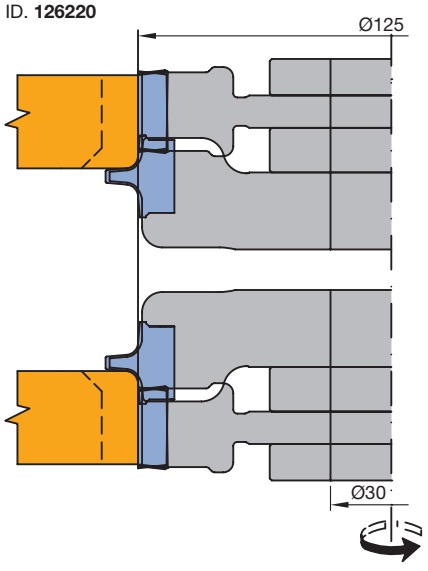

ID. **126221**

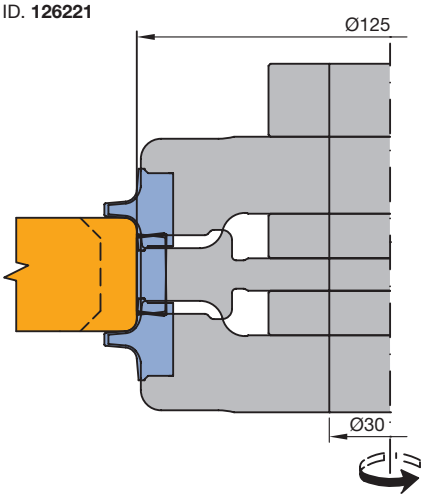

ID. **126222**

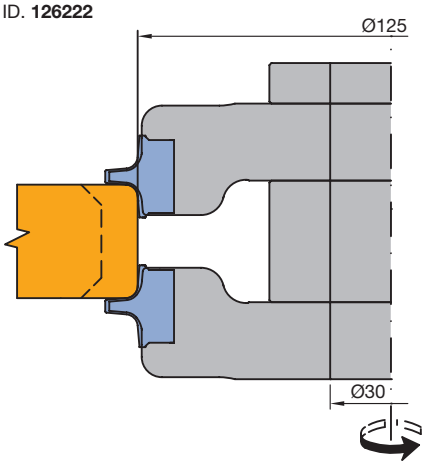

ID. 126220

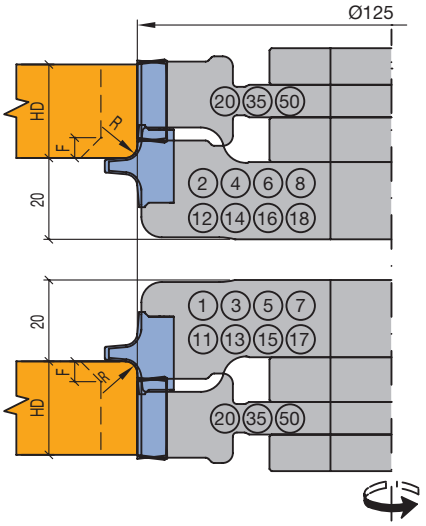

Order example:
-Combination ID 126220
-Profile description top down RL
jointingSB35/R5 or R5/jointingSB35
-Bore diameter 30

Wood thickness (HD):

Jointing tool	20	35	50
max. HD	18+R (F)	33+R (F)	48+R (F)

F (bevel) max. = 3, 5, 7x45° or 8x40°

ID. 126221

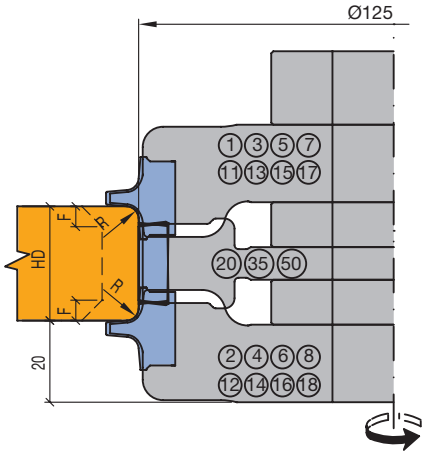

Order example:
-Combination ID 126221
-Profile description top down RL
R5/jointingSB35/R5
-Bore diameter 30

	Jointing tool		
Radii tools	20	35	50
No.1(11)+2(12)	6	12	24
No.1(11)+4(14)	13	19	31
No.1(11)+6(16)	18	24	36
No.1(11)+8(18)	28	34	46
No.3(13)+2(12)	13	19	31
No.3(13)+4(14)	20	26	38
No.3(13)+6(16)	25	31	43
No.3(13)+8(18)	35	41	53
No.5(15)+2(12)	18	24	36
No.5(15)+4(14)	25	31	43
No.5(15)+6(16)	30	36	48
No.5(15)+8(18)	40	46	58
No.7(17)+2(12)	28	34	46
No.7(17)+4(14)	35	41	53
No.7(17)+6(16)	40	46	58
No.7(17)+8(18)	50	56	68
max. HD	18+R+R (F+F)	33+R+R (F+F)	48+R+R (F+F)

Minimum wood thickness

F (bevel) max. = 3, 5, 7x45° or 8x40°
Wood thicknesses are calculated with max. bevel

ID. 126222

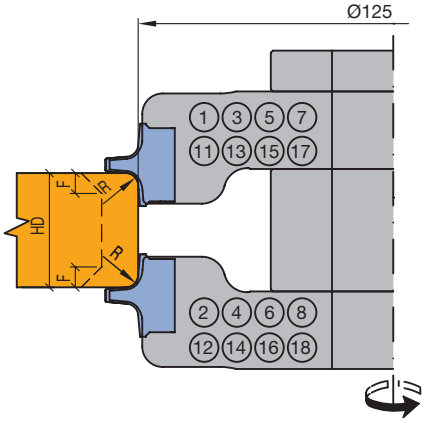

Order example:
-Combination ID 126222
-Profile description top down RL
R5/R5
-Bore diameter 30

Radii tools	
No.1(11)+2(12)	-2
No.1(11)+4(14)	5
No.1(11)+6(16)	10
No.1(11)+8(18)	20
No.3(13)+2(12)	5
No.3(13)+4(14)	12
No.3(13)+6(16)	17
No.3(13)+8(18)	27
No.5(15)+2(12)	10
No.5(15)+4(14)	17
No.5(15)+6(16)	22
No.5(15)+8(18)	32
No.7(17)+2(12)	20
No.7(17)+4(14)	27
No.7(17)+6(16)	32
No.7(17)+8(18)	42

Minimum wood thickness

● available ex stock
□ available at short notice
Instruction manual visit www.leitz.org

Spare part: clamping wedge 630140

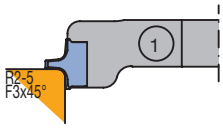

WZ 125574 / ME 619245	R2	
WZ 125576 / ME 619246	R3	
WZ 125577 / ME 619247	R4	
WZ 125578 / ME 619248	R5	
WZ 125579 / ME 619252	F3x45°	

Spare part: clamping wedge 630140

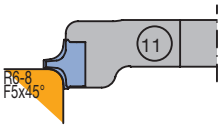

WZ 125584 / ME 619249	R6	
WZ 125585 / ME 619250	R7	
WZ 125586 / ME 619251	R8	
WZ 125587 / ME 619253	F5x45°	

Spare part: clamping wedge 630141

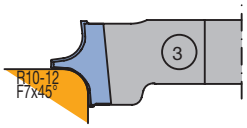

WZ 125594 / ME 619254	R10	
WZ 125595 / ME 619255	R11	
WZ 125596 / ME 619256	R12	
WZ 125597 / ME 619261	F7x45°	

Spare part: clamping wedge 630140

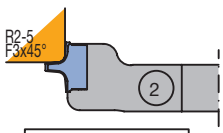

WZ 125575 / Messer 619245	R2	
WZ 125580 / ME 619246	R3	
WZ 125581 / ME 619247	R4	
WZ 125582 / ME 619248	R5	
WZ 125583 / ME 619252	F3x45°	

Spare part: clamping wedge 630140

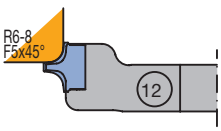

WZ 125588 / ME 619249	R6	
WZ 125589 / ME 619250	R7	
WZ 125590 / ME 619251	R8	
WZ 125591 / ME 619253	F5x45°	

Spare part: clamping wedge 630141

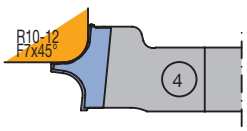

WZ 125598 / ME 619254	R10	
WZ 125599 / ME 619255	R11	
WZ 125600 / ME 619256	R12	
WZ 125601 / ME 619261	F7x45°	

Spare part: clamping wedge 630141

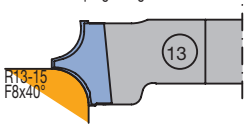

WZ 125602 / ME 619257	R13	
WZ 125603 / ME 619258	R14	
WZ 125604 / ME 619259	R15	
WZ 125605 / ME 619262	F8x40°	

Spare part: clamping wedge 630142

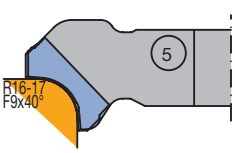

WZ 125611 / ME 619263	R16	
WZ 125612 / ME 619264	R17	
WZ 125613 / ME 619269	F9x40°	

Spare part: clamping wedge 630142

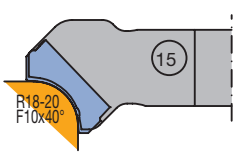

WZ 125617 / ME 619265	R18	
WZ 125618 / ME 619266	R19	
WZ 125619 / ME 619267	R20	
WZ 125620 / ME 619270	F10x40°	

Spare part: clamping wedge 630141

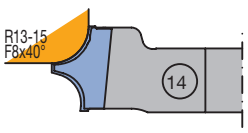

WZ 125607 / ME 619257	R13	
WZ 125608 / ME 619258	R14	
WZ 125609 / ME 619259	R15	
WZ 125610 / ME 619262	F8x40°	

Spare part: clamping wedge 630143

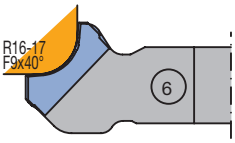

WZ 125614 / ME 619271	R16	
WZ 125615 / ME 619272	R17	
WZ 125616 / ME 619277	F9x40°	

Spare part: clamping wedge 630143

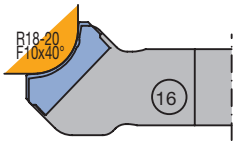

WZ 125621 / ME 619273	R18	
WZ 125622 / ME 619274	R19	
WZ 125623 / ME 619275	R20	
WZ 125624 / ME 619278	F10x40°	

Spare part: clamping wedge 630144

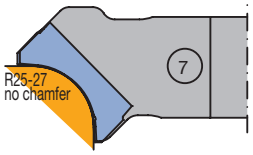

WZ 125625 / ME 619279	R25	
WZ 125626 / ME 619280	R26	
WZ 125627 / ME 619281	R27	

Spare part: clamping wedge 630144

ME

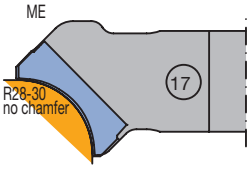

WZ 125631 / ME 619282	R28	
WZ 125632 / ME 619283	R29	
WZ 125633 / ME 619284	R30	

SB 20

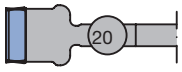

WZ 125680 / ME 601604 / VE 10 pcs.)
Wedge 630204

SB 35

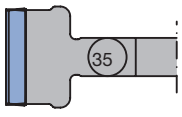

WZ 125681 / ME 601607 / VE 10 pcs.)
Wedge 630208

Spare part: clamping wedge 630145

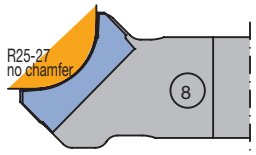

WZ 125628 / ME 619285	R25	
WZ 125629 / ME 619286	R26	
WZ 125630 / ME 619287	R27	

Spare part: clamping wedge 630145

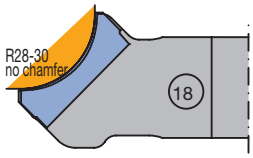

WZ 125634 / ME 619288	R28	
WZ 125635 / ME 619289	R29	
WZ 125636 / ME 619290	R30	

SB 50

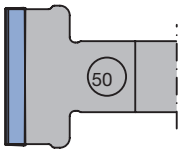

WZ 125682 / ME 601610 / VE 10 pcs.)
Wedge 630211

Spacer set
(one set per cutterhead necessary)



60x20x30

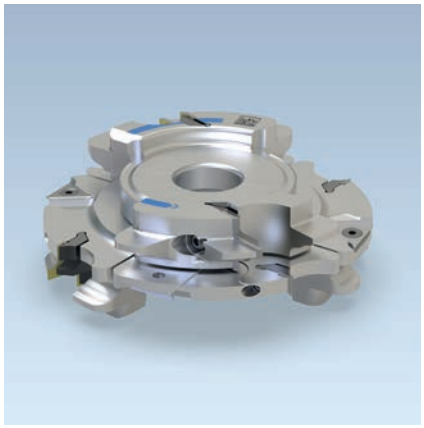









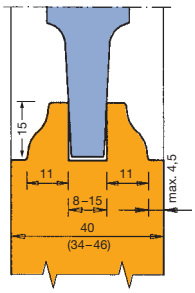

Profile P 1 closed joint

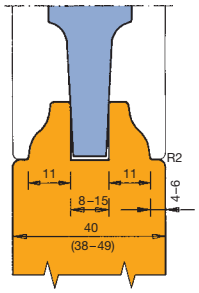

Profile P 1.1 with open joint

Profile cutterhead ProfilCut Q for internal doors

Application:
For internal door profiles and counter profiles.

Machine:
Spindle moulders and moulders.

Workpiece material:
Softwood and hardwood.

Technical information:
Cutterhead with change knives, straight cut.

Tool combination DOUBLE profile with jointing
AE 341 1 53, AW 341 1

Tool Type	Tool no.	BO mm	BO_{max} mm	ID
Profile 1 (P2-P5 on request)	1/2/3	30	50	**126223** ●
Profile 1.1 (P2.1-P5.1 on request)	1/2/3/4/5	30	50	**126224**
Profile 6/7	2/4/5/6/7	30	50	**126225**
Profile 6.1/7	2/4.1/5.1/6/7	30	50	**126226**
Profile 8	2/8/9/10	30	50	**126227**
Profile 8.1	2/8.1/9.1/10	30	50	**126228**
Addition for rebates and/or one side	15/16	30	50	**126229**

Combinations complete in wooden boxes.

Single tools
SW 501 1, WE 500 1 53, WW 200 1, WW 210 1, WW 410 1

Tool Type	Tool no.	D mm	SB mm	BO mm	ID
Profile cutterhead *	1	155	25	30	**125637** ●
Grooving cutterhead	2	155,2	8 - 15	30	**125686** ●
Profile cutterhead	3	155	25	30	**125638** ●
Profile cutterhead	4	161	30	30	**125639**
Profile cutterhead	5	161	30	30	**125640**
Profile cutterhead	6	155,1	25	30	**125641**
Profile cutterhead	7	155,1	25	30	**125642**
Profile cutterhead	8	165	25	30	**125643**
Profile cutterhead bevel	8.1	165	25	30	**125644**
Profile cutterhead	9	165	25	30	**125645**
Profile cutterhead bevel	9.1	165	25	30	**125646**
Jointing cutterhead	10	125	15	30	**125687**
Rebating cutterhead	15	155	35	30	**125688**
Jointing cutterhead	16	125	30	30	**125689**

* = Profile cutterheads supplied with profile P1.

Spare knives:

Part-no.	BEZ	ABM mm	P	Tool no.	QAL	VE PCS	ID
1	ProfilCut Q knife	25x27x2	1	1	MC		**619291**
1	ProfilCut Q knife	25x27x2	2	1	MC		**619292**
1	ProfilCut Q knife	25x27x2	3	1	MC		**619293**
1	ProfilCut Q knife	25x27x2	4	1	MC		**619294**
1	ProfilCut Q knife	25x27x2	5	1	MC		**619295**
1	ProfilCut Q knife	25x27x2	1	1	MC		**619296**
1	ProfilCut Q knife	25x27x2	2	3	MC		**619297**
1	ProfilCut Q knife	25x27x2	3	3	MC		**619298**
1	ProfilCut Q knife	25x27x2	4	3	MC		**619299**
1	ProfilCut Q knife	25x27x2	5	3	MC		**619300**
1	ProfilCut Q knife	30x31x2	6/7	3	MC		**619301**
1	ProfilCut Q knife	30x31x2	6/7	5	MC		**619302**
1	ProfilCut Q knife	25x27x2	6/6.1/7	6	MC		**619303**
1	ProfilCut Q knife	25x27x2	6/6.1/7	7	MC		**619304**
1	ProfilCut Q knife	25x32x2	8	8	MC		**619305**
1	ProfilCut Q knife	25x32x2	8.1	8.1	MC		**619306**

● available ex stock
□ available at short notice
Instruction manual visit www.leitz.org

Part-no.	BEZ	ABM mm	P	Tool no.	QAL	VE PCS	ID
1	ProfilCut Q knife	25x32x2	8	9	MC		**619307**
1	ProfilCut Q knife	25x32x2	8.1	9.1	MC		**619308**
5	Turnblade knife Marathon	14,7x8x1,5		10	HW-30F MC	10	**601603** ●
5	Turnblade knife Marathon	30x8x1,5		16	HW-30F MC	10	**601606** ●
5	Turnblade knife Marathon	35x8x1,5		15	HW-30F MC	10	**601607** ●
7	Turnblade spur VS2	19x19x2		2/5	HW-F	10	**005115** ●
9	Turnblade knife Marathon	7,7x8x1,5		2	HW-30F MC	10	**601600** ●

Spare parts:

Part-no.	BEZ	ABM mm	P	Tool no.	ID
2	Clamping wedge profiled	22x30x8,27		3	**630172**
2	Clamping wedge profiled	22x30x8,27		1	**630173**
2	Clamping wedge profiled	27x38x8,27	6/6.1/7	4/4.1	**630174**
2	Clamping wedge profiled	27x38x8,27	6/6.1/7	5/5.1	**630175**
2	Clamping wedge profiled	22x37,3x8,27	6/6.1/7	6	**630176**
2	Clamping wedge profiled	22x37,3x8,27	6/6.1/7	7	**630177**
2	Clamping wedge profiled	22x37x8,27	8/8.1	8/8.1	**630178**
2	Clamping wedge profiled	22x37x8,27	8/8.1	9/9.1	**630179**
3	Clamping screw w. disc, Torx® 20	M5x18.5			**007446** ●
4	Torx® key	Torx® 20			**117503** ●
6	Clamping wedge	13x18,75x8,27		6	**630203** ●
6	Clamping wedge	28x18.75x8.27	1/2/16	4	**630206** ●
6	Clamping wedge	33x18,75x8,27	15	5	**630208** ●
8	Countersink screw, Torx® 20	M6x0.5x4.9			**006243** ●
10	Clamping wedge	7x18,75x8,27	2	2	**009763** ●
11	Allen screw with shank, Torx® 15	M5x20			**007380** ●
12	Torx® key	Torx® 15			**117507** ●
	Magnetic setting gauge	0.3/0.8			**005376** ●

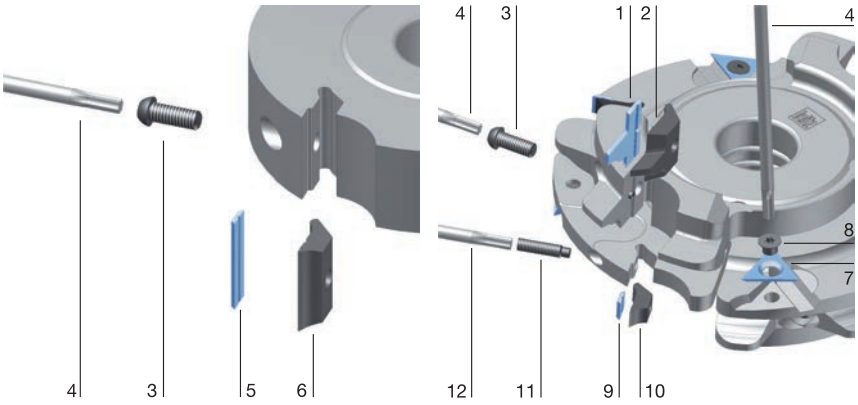

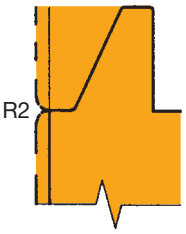

P2/P2.1



P3/P3.1

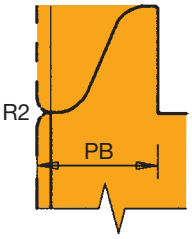

P4/P4.1

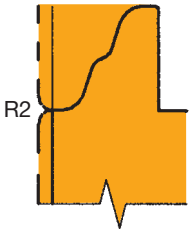

P5/P5.1

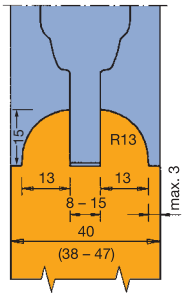

P6

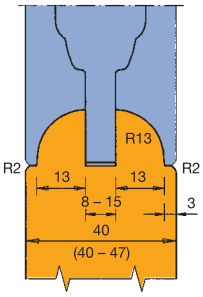

P6.1

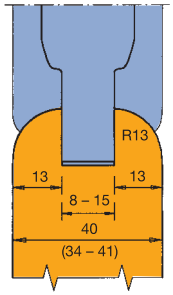

P7

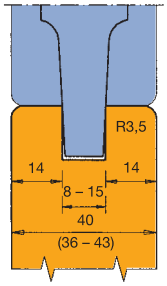

P8

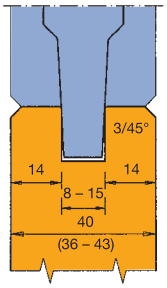

P8.1

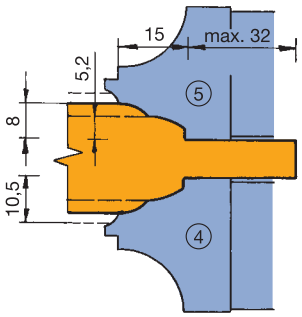

These profile cutterheads can be used for panel raising.

Fig.: Combination options of single tools
Double profile

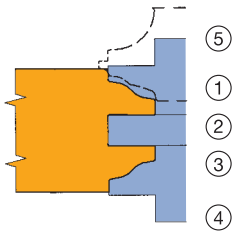

For profiles P1 - P5.1 along grain

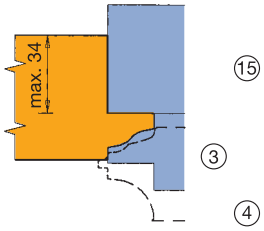

Rebate*

On one side*

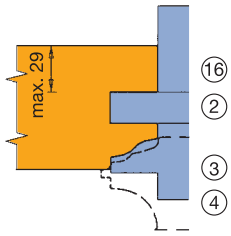

Double profile

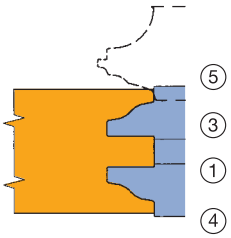

Profiles P1 - P5.1 counter profile

Rebate*

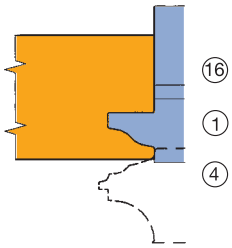

On one side*

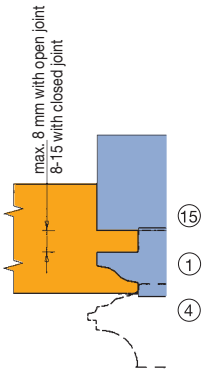

* Profiles P1 - P8 (rebate possible and on one side)

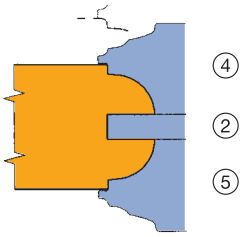

Profiles P6 - P7 along grain

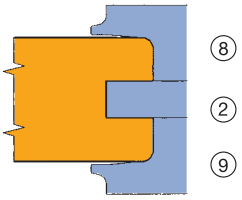

Profile P8 along grain

● available ex stock
□ available at short notice
Instruction manual visit www.leitz.org

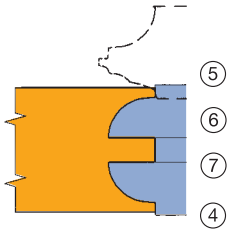

Profiles P6 - P7 counter profile

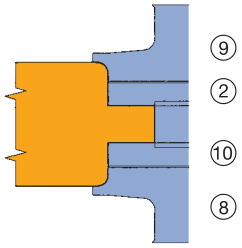

Profile P8 counter profile

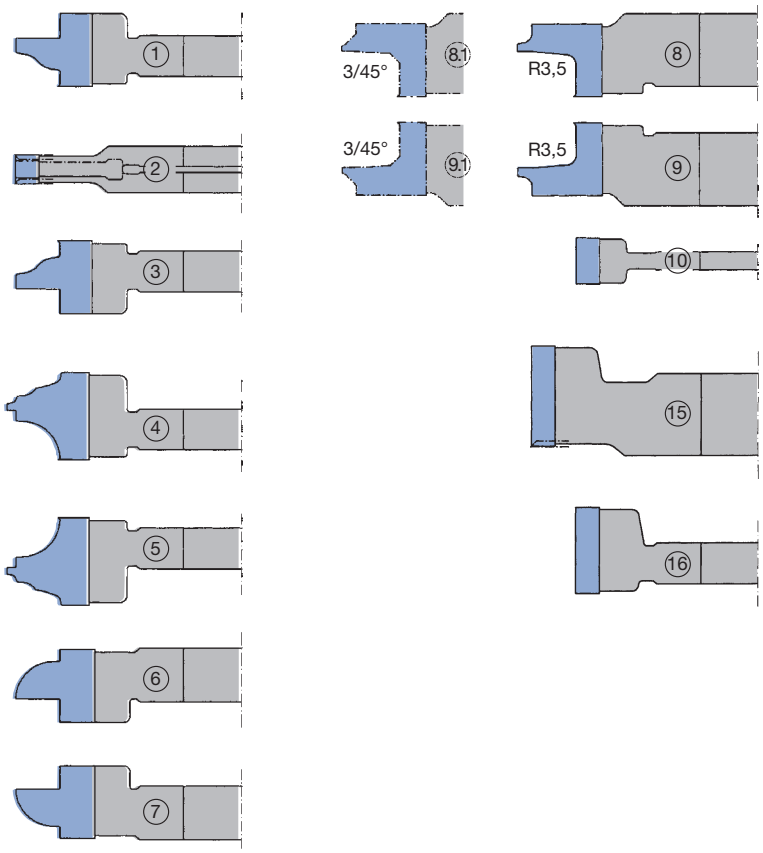

Single tools

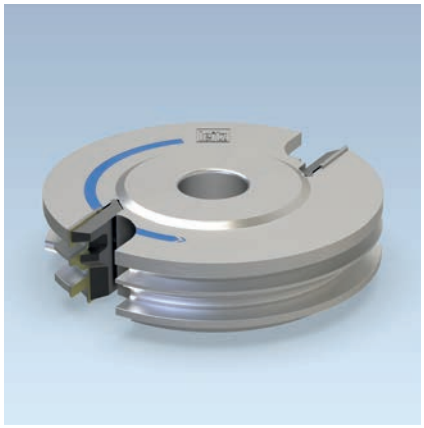



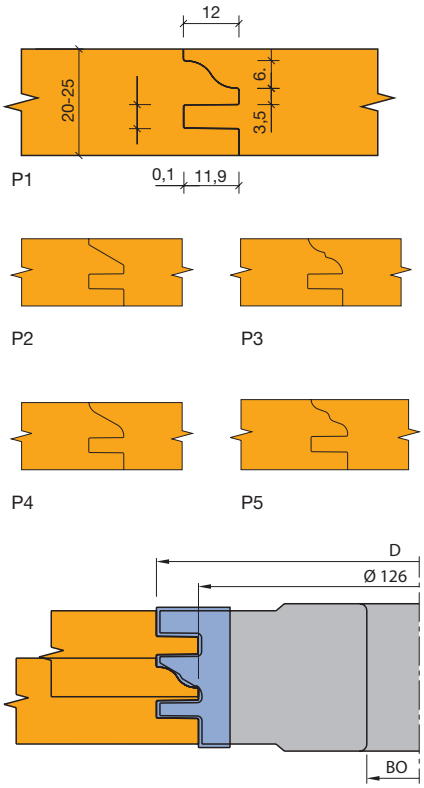

Profile cutterhead

Profile cutterhead ProfilCut Q for furniture doors

Application:
For profiles and counter profiles for furniture doors.

Machine:
Spindle moulders and moulders.

Workpiece material:
Softwood and hardwood.

Technical information:
Cutterhead with change knives, straight cut.

SB 20 - 25 mm; with closed joint
WE 640 1 53

P	D mm	SB mm	BO mm	BO_{max} mm	Z	n min^{-1}	ID
1	150	40	30	50	2	5200 - 8900	**125647** ●
1	150	40	50		2	5200 - 8900	**125648** □

Spare knives:

P	Part-no.	BEZ	ABM mm	QAL	ID
1	1	ProfilCut Q knife	40x26x2	MC	**619311**
2	1	ProfilCut Q knife	40x26x2	MC	**619312**
3	1	ProfilCut Q knife	40x26x2	MC	**619313**
4	1	ProfilCut Q knife	40x26x2	MC	**619314**
5	1	ProfilCut Q knife	40x26x2	MC	**619315**

Spare parts:

Part-no.	BEZ	ABM mm	ID
2	Clamping wedge profiled	37x35x8,27	**630180**
3	Clamping screw w. disc, Torx® 20	M5x18.5	**007446** ●
4	Torx® key	Torx® 20	**117503** ●

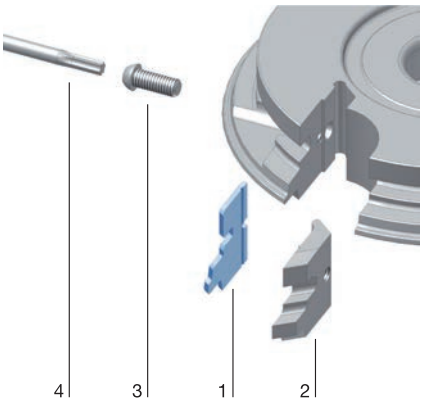

● available ex stock
□ available at short notice
Instruction manual visit www.leitz.org





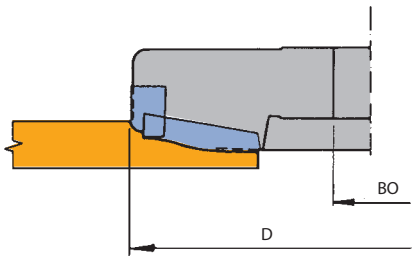

Single side panel raising

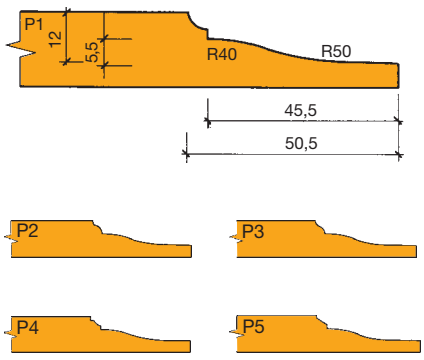

Profile cutterhead ProfilCut Q - panel raising

Application:
For profiling and panel raising 5 different profiles by knife change.

Machine:
Spindle moulders and moulders, double-end tenoners.

Workpiece material:
Softwood and hardwood (along and across grain).

Technical information:
Cutterhead with change knives, shear angle.

Profiling and panel raising, panel raising profile curved
AE 342 1 53

P	D mm	SB mm	BO mm	BO_{max} mm	Z	n min^{-1}	DRI	ID
1	190	40	30	50	2/2	4100 - 7000	RH	**125649** ●

Spare knives:

P	Part-no.	BEZ	ABM mm	ID
1	1	ProfilCut Q knife	20x16x2	**619321** ●
2	1	ProfilCut Q knife	20x16x2	**619322** ●
3	1	ProfilCut Q knife	20x16x2	**619323** ●
4	1	ProfilCut Q knife	20x16x2	**619324**
5	1	ProfilCut Q knife	20x16x2	**619325**
	2	ProfilCut Q knife (pan.rais.)	50x11,68x2	**619326** ●

Spare parts:

Part-no.	BEZ	ABM mm	ID
3	Clamping wedge profiled	17x25x8,27	**630181**
4	Clamping wedge profiled	47x23,2x8,27	**630182**
5	Clamping screw w. disc, Torx® 20	M5x18.5	**007446** ●
6	Torx® key	Torx® 20	**117503** ●

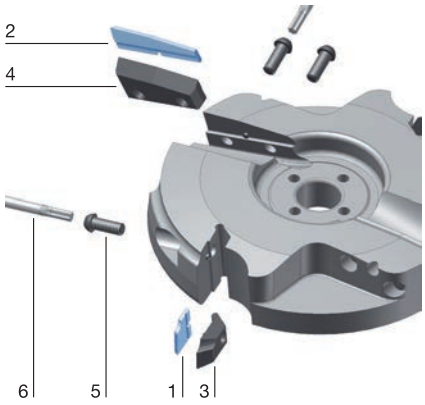





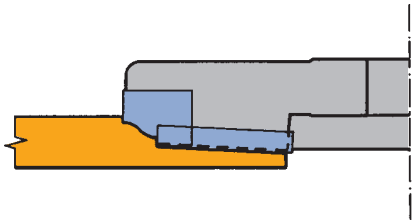

Single side panel raising

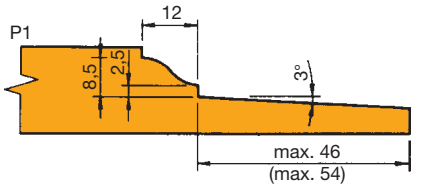

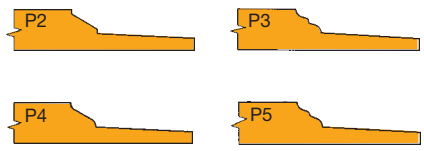

Profile cutterhead ProfilCut Q - panel raising

Application:
For profiling and panel raising 5 different profiles by knife change.

Machine:
Spindle moulders and moulders, double-end tenoners.

Workpiece material:
Softwood and hardwood (along and across grain).

Technical information:
Cutterhead with change knives, shear angle.

Profiling and panel raising, panel raising profile straight
AE 342 1 53

P	D mm	SB mm	BO mm	BO_{max} mm	Z	n min^{-1}	DRI	ID
1	204	33	30	50	2/2	3800 - 6500	RH	**125650**
1	220	33	30	50	2/2	3500 - 6000	RH	**125651**
1	220	33	50	50	2/2	3500 - 6000	RH	**125652**

P1 = Profile cutterhead P1.

Spare knives:

P	Part-no.	BEZ	ABM mm	VE PCS	ID
1	1	ProfilCut Q knife	20x27x2		**619327**
2	1	ProfilCut Q knife	20x27x2		**619328**
3	1	ProfilCut Q knife	20x27x2		**619329**
4	1	ProfilCut Q knife	20x27x2		**619330**
5	1	ProfilCut Q knife	20x27x2		**619331**
	2	Turnblade knife Marathon	50x8x1,5	10	**601610** ●
	2	Turnblade knife Marathon	60x8x1,5	10	**601611** ●

Spare parts:

P	Part-no.	BEZ	ABM mm	ID
1-5	3	Clamping wedge profiled	17x35x8,27	**630183**
	4	Clamping wedge	48x18,75x8,27	**630211** ●
	4	Clamping wedge	58x18,75x8,27	**630212** ●
	5	Clamping screw w. disc, Torx® 20	M5x18.5	**007446** ●
	6	Torx® key	Torx® 20	**117503** ●

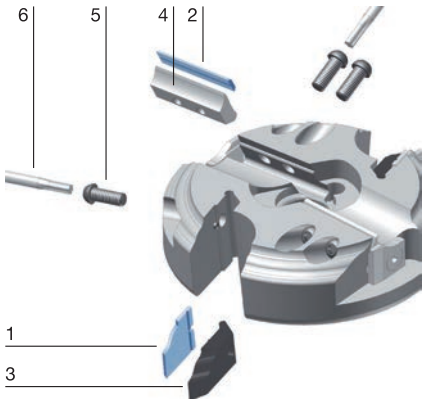

● available ex stock
□ available at short notice
Instruction manual visit www.leitz.org



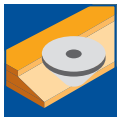









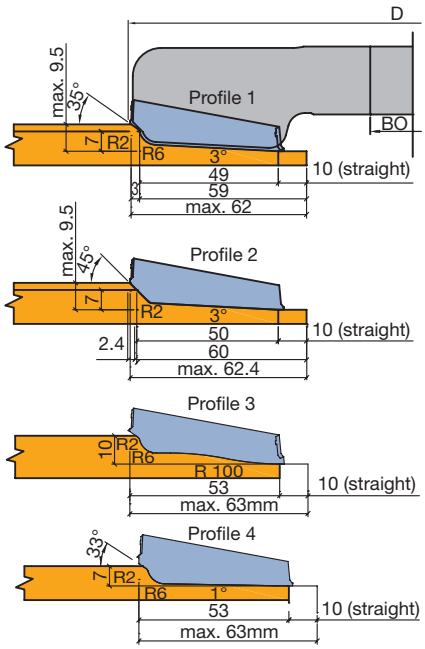

Profile cutterhead ProfilCut Q - panel raising

Application:
For profiling and panel raising 4 different profiles by knife change.

Machine:
Spindle moulders and moulders, double-end tenoners.

Workpiece material:
Softwood and hardwood, three layer laminate.

Technical information:
Cutterhead with change knives and shear angle. Tool with 4 profile variants (bevel and quarter round).

Profiling and panel raising using one knife, panel raising profile straight
WE 550 1 53

P	D mm	SB mm	BO mm	BO_{max} mm	Z	n min^{-1}	ID
1	200	10 - 37	30	50	2	3900 - 6600	**125653** ●

Spare knives:

P	Part-no.	BEZ	ABM mm	QAL	ID
1	1	ProfilCut Q knife	60x14,5x2	MC	**619332** ●
2	1	ProfilCut Q knife	60x14,56x2	MC	**619333** ●
3	1	ProfilCut Q knife	60x14,5x2	MC	**619489**
4	1	ProfilCut Q knife	60x14,5x2	MC	**619490**

Spare parts:

Part-no.	BEZ	ABM mm	ID
2	Clamping wedge profiled	57x26,1x7,25	**630184**
3	Clamping screw w. disc, Torx® 20	M5x18.5	**007446** ●
4	Torx® key	Torx® 20	**117503** ●

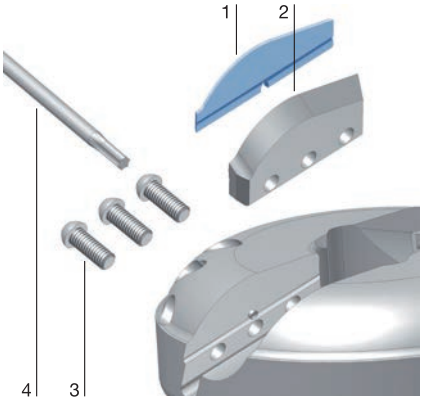

● available ex stock
□ available at short notice
Instruction manual visit www.leitz.org



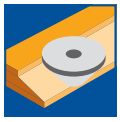







Profile 1.1

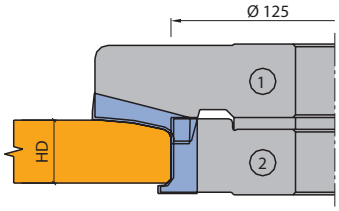

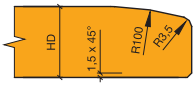

P1.1

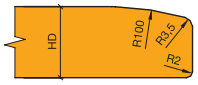

P1.2

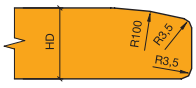

P1.3

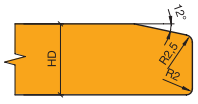

P2.2

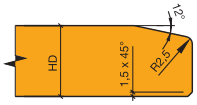

P2.1

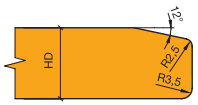

P2.3

Profile cutterhead set ProfilCut Q

Application:
For panel raising of cabinet doors, table tops and worktops.

Machine:
Spindle moulders and moulders, double-end tenoners.

Workpiece material:
Softwood and hardwood, wood derived materials.

Technical information:
Cutterhead with throwaway knives and shear angle. Can be used either as single tool without jointing or as set with jointing cutterhead.

Profile cutterhead set with jointing
SE 500 1 53

P	Tool no.	D mm	SB mm	BO mm	BO_{max} mm	Z	n min^{-1}	ID
1.1	1 / 2	185	29 - 29,5	30	50	2	4200 - 7200	**126230** ●

Single tools
WE 500 1 53, WE 550 1 53

Tool no.	D mm	SB mm	BO mm	BO_{max} mm	Z	n min^{-1}	ID
1	185	10 - 38	30	50	2	4200 - 7200	**125654**
2	135	29 - 29,5	30	50	2	5700 - 9800	**125655**

Spare knives:

P	Part-no.	BEZ	ABM mm	Tool no.	QAL	ID
1	1	ProfilCut Q knife	40x13,9x2	1	MC	**619316**
2	1	ProfilCut Q knife	40x13,88x2	1	MC	**619317**
1	1	ProfilCut Q knife	30x14,9x2	2	MC	**619318**
2	1	ProfilCut Q knife	30x15x2	2	MC	**619319**
3	1	ProfilCut Q knife	30x14,95x2	2	MC	**619320**

Spare parts:

Part-no.	BEZ	ABM mm	Tool no.	ID
2	Clamping wedge profiled	37x24,9x8,27	1	**630185** ●
2	Clamping wedge profiled	27x23x8,27	2	**630186** ●
3	Clamping screw w. disc, Torx® 20	M5x18.5		**007446** ●
4	Torx® key	Torx® 20		**117503** ●

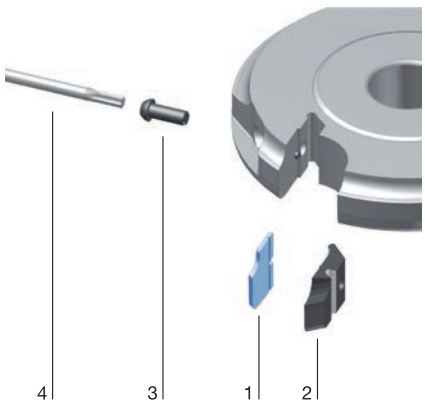

● available ex stock
□ available at short notice
Instruction manual visit www.leitz.org

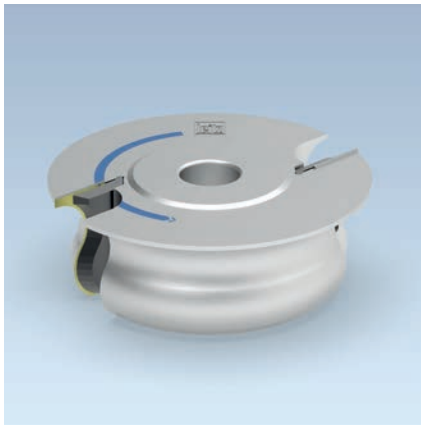











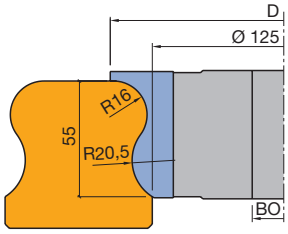

Handrail profile

Profile cutterhead ProfilCut Q for handrail profile

Application:
For handrails. Copy shaping of curved workpieces using template and ball bearing guide ring.

Machine:
Spindle moulders and moulders, machines with/without CNC control.

Workpiece material:
Softwood and hardwood.

Technical information:
Cutterhead with change knives and straight cut.

Handrail profile
WE 500 1 53

D mm	SB mm	BO mm	BO_{max} mm	Z	n min^{-1}	ID
165	60 - 61	30	50	2	4700 - 8100	**125656** ●

Spare knives:

Part-no.	BEZ	ABM mm	QAL	ID
1	ProfilCut Q knife	60x32.7x2.4	MC	**619500**

Spare parts:

Part-no.	BEZ	ABM mm	ID
2	Clamping wedge profiled	57x35x8,27	**630187**
3	Clamping screw w. disc, Torx® 20	M5x18.5	**007446** ●
4	Torx® key	Torx® 20	**117503** ●

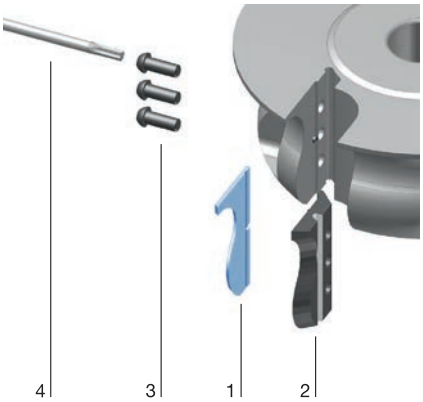

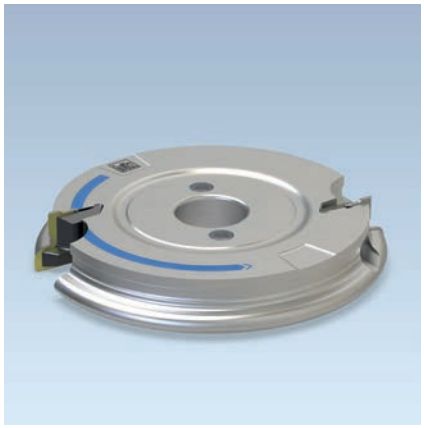











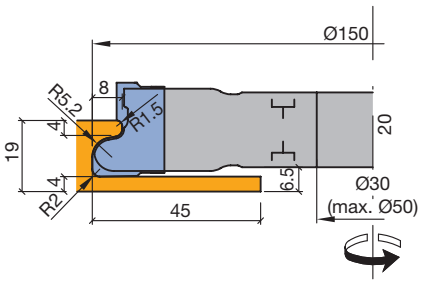

Profile Cutterhead ProfilCut Q for grip rails

Application:
For cutting recessed grips.

Machine:
Spindle moulders and moulders.

Workpiece material:
Softwood and hardwood, chip and fibre board, raw or plastic coated, glulam etc.

Technical information:
Maximum operating comfort due to lightweight construction of the tool body. Longer lasting consistent finish cutting quality due to Marathon high performance coating.

MAN feed
WE 500 1 53

D mm	SB mm	BO mm	BO_{max} mm	Z	ID
150	25	30	50	2	**125657** ●

RPM: n_{max} = 12500 min^{-1}

Throwaway knives for other profile variants available on request.

Spare knives:

Part-no.	BEZ	ABM mm	QAL	ID
1	ProfilCut Q knife	25.1x21x2.4	MC	**619475**

Spare parts:

Part-no.	BEZ	ABM mm	ID
2	Clamping wedge profiled	21x29,5x8,27	**630188**
3	Clamping screw w. disc, Torx® 20	M5x18.5	**007446** ●
4	Torx® key	Torx® 20	**117503** ●

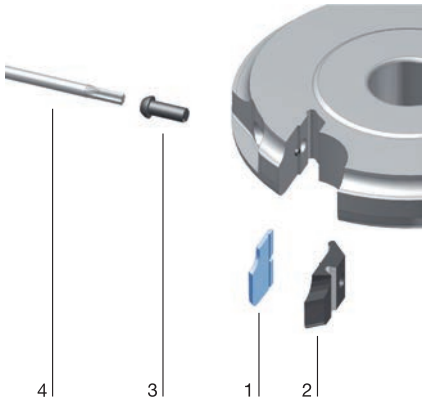

● available ex stock
□ available at short notice
Instruction manual visit www.leitz.org

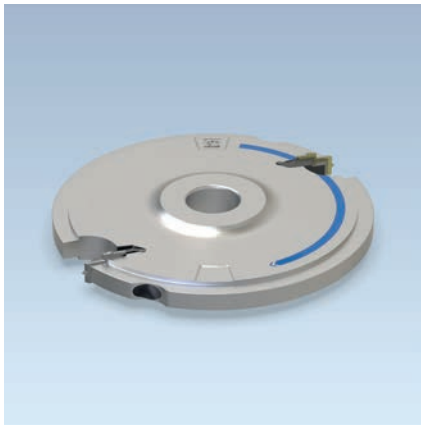











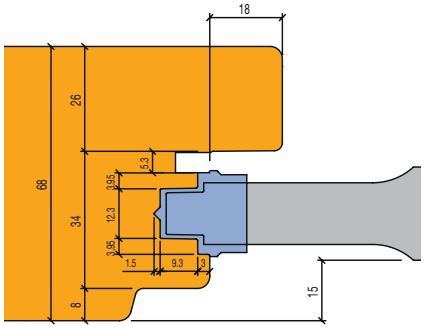

Profile cutterhead ProfilCut Q for gear grooves

Application:
For gear grooves.

Machine:
Spindle moulders and moulders.

Workpiece material:
Softwood and hardwood.

Technical information:
Cutterhead with change knives. User friendliness by lightweight construction of the tool body. Longer performance and cut quality due to Marathon high performance coating.

Gear groove
WE 500 1 53

D mm	SB mm	BO mm	BO_{max} mm	Z	n min^{-1}	ID
188,6	21,3/23,1	30	50	2	4100 - 9100	**125658** ●

Spare knives:

Part-no.	BEZ	ABM mm	QAL	ID
1	ProfilCut Q knife	21.3x25x2.4	MC	**619521**

Spare parts:

Part-no.	BEZ	ABM mm	ID
2	Clamping wedge	15x33x8,27	**630189**
3	Clamping screw w. disc, Torx® 20	M5x18.5	**007446** ●
4	Torx® key	Torx® 20	**117503** ●

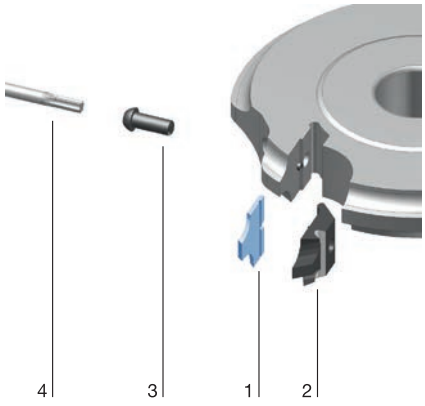

Type of operation

The tools described in the following section are suitable for making many different profiles. This includes profiling in craft or industry, the relevant product descriptions provide a reference when using a specific tool, and the type of woods processed.

The introduction to each section gives general notes and application regulations.

Relation between surface quality and length of knife marks $f_{z\ eff}$

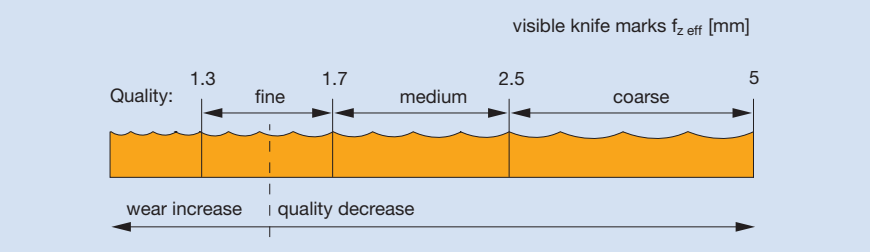

Feed speeds depending on RPM, length of knife marks and number of teeth

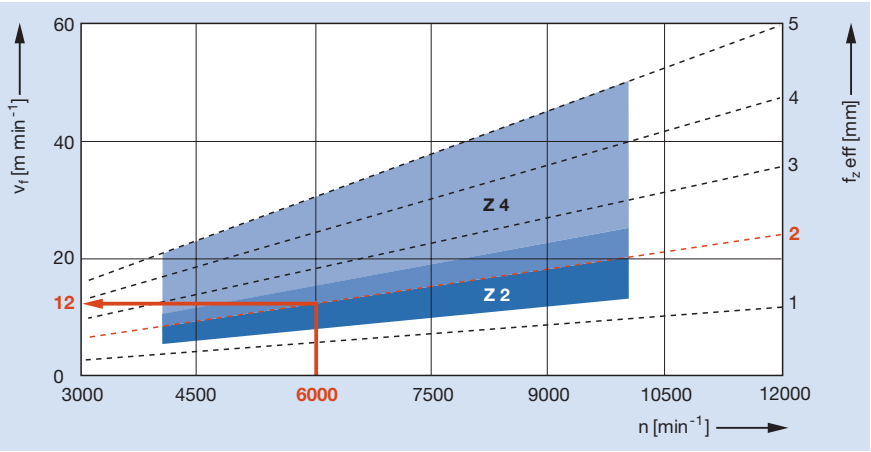

With multi blade tools, only the marks of one knife show on the surface (one knife finish). Z 2 and Z 4 tools produce the same surface quality with same machine setting. High numbers of teeth are required for a high hogging performance.

Workpiece materials, machines, application

Please refer to the relevant product pages depending on the operation and profile.

Tool system



WM 500 1 04 Profile cutterhead with limitor, tool body in aluminium.

For profile depths up to maximum 15 mm and cutting widths of 50 mm. (WM 510 1 03)
For profile depths up to maximum 15 mm and cutting widths of 40 mm. (WM 500 1 04)
For small companies or craft. For spindle moulders or combination machines. More than 127 standard profile cutters and limitors available. If required Leitz can supply profile knives and limitors in HS quality to a special shape. Only a drawing or wood sample of the required profile is necessary to produce the special knives.

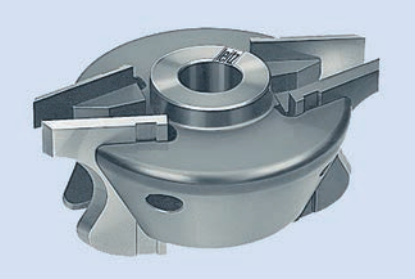

WM 530 1 01 Profile cutterhead.
WM 530 1 02 Profile cutterhead.
WM 520 1 Profile cutterhead.
WM 540 1 Profile cutterhead.

For big profile depths up to maximum 45 mm and cutting widths up to 80 mm. Suitable for small and medium sized companies to produce special profiles. For machines with manual feed. Special profile knives in HS quality can be produced by the Leitz service stations on request. Only a sketch or wood sample of the required profile is necessary to produce special profile knives.

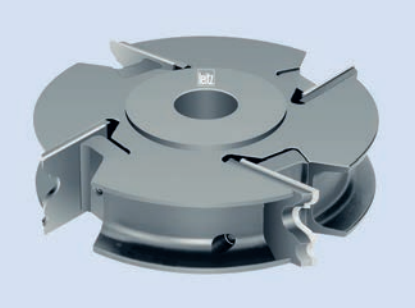

Profile cutterhead VariForm.

VariForm cutterheads are available in different designs and dimensions. The tool body is designed for mech. feed without limitor or for manual feed with limitor depending on the application. Please select the correct type of cutterhead for each application from the diagram below.

Design variation	Profile depth up to 15/19 mm	Profile depth up to 20 mm	Profile depth up to 35 mm
MAN-feed For spindle moulders	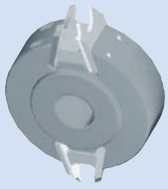 Multi-purpose tool body	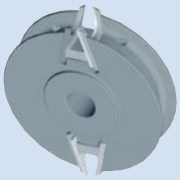 Part profiled tool body, U-profile	 Profiled tool body, cranked right/left
Cutting width	40/45 mm a. 50/60 mm	45/45 mm a. 50/60 mm	40 mm to 60 mm













Table for diameters when using rebating and profile knives:

D-mm Tool body	D-mm with rebating knife	D-mm with profile knife
93	108	130
114	128	150

Profile cutterhead, aluminium tool body

Application:
For profiling, jointing and rebating.

Machine:
Spindle moulders and moulders.

Workpiece material:
Softwood.

Technical information:
Profile cutterhead with aluminium tool body for standard and special profile knives up to 50 mm cutting width and maximum profile depth 15 mm. Constant diameter by using changeable profile knives. Knife thickness 4 mm.

D 108 mm - 148 mm
WM 500 1 04, WM 500 1 06

D mm	SB mm	BO mm	BO_{max} mm	Z	n min^{-1}	QAL	ID
108	40	30	30	2	6000 - 10000	SP	**025685** ●
128	40 - 50	30	40	2	6000 - 9000	SP	**025815** ●
128	80	30	40	2	6000 - 8000	SP	**025816** ●
148	40 - 50	30	50	2	5500 - 7000	SP	**025691** ●

See section Knives and Spare Parts.

Spare knives:

Part-no.	BEZ	ABM mm	QAL	ID
1	Rebate knife	40x32,8x4	SP	**007104** ●
2	Limitor	38,4x32,8x4	ST	**005586** ●

Spare parts:

Part-no.	BEZ	ABM mm	ID
3	Clamping wedge	36x13,21x26	**009756** ●
3	Clamping wedge	56x13,21x26	**009757** ●
4	Allen screw with ISK 5	M10x12	**006044** ●
	Allen key	SW 5	**005446** ●

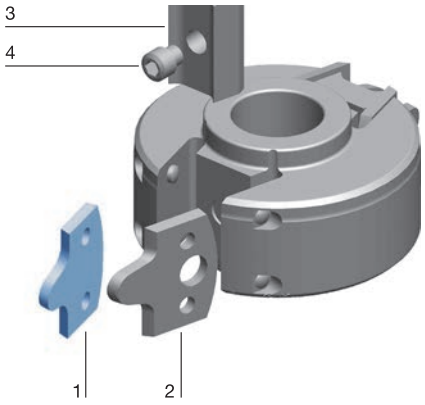

● available ex stock
□ available at short notice
Instruction manual visit www.leitz.org













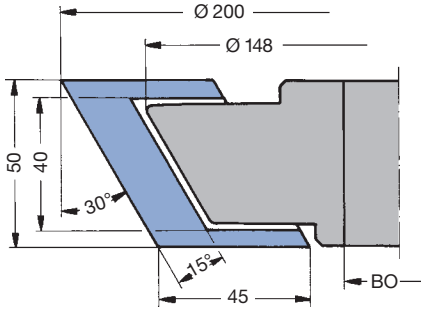

Profile cutterhead

Application:
For deep one-sided profiles, maximum 45 mm depth.

Machine:
Spindle moulders and moulders.

Workpiece material:
Softwood and hardwood.

Technical information:
Cutting width up to 50 mm. See illustration for usable profile area.
Knife thickness 4.0 mm.

MAN feed, for one sided profiles with SB 50 mm
WM 530 1 01

D	TD	SB	BO	BO_{max}	Z	n	ID
mm	mm	mm	mm	mm		min^{-1}	
200	148	50	30	40	2	4500 - 7000	**029636** ●

Sales unit without knives and limitors.
Note: State direction of rotation when ordering knives.

Spare knives:

BEZ	BEM	ABM mm	QAL	ID
Blank Knife	R/T	50.4x45x4	HS	**007297** ●
Blank Knife	R/B	50.4x45x4	HS	**007298** ●
Limitor blank	R/T	48.8x45x4	SP	**005603** ●
Limitor blank	R/B	48.8x45x4	SP	**005604** ●

Spare parts:

BEZ	ABM mm	ID
Allen screw	M10x16	**006046**
Allen key	SW 5	**005446** ●
Double wedge	49,2x13,2x26	**009927** ●

HS-special profiles and SP-profile limitors

Profile knives set inc. limitor	PG I	SB = 50 mm
Profile knives set inc. limitor	PG II	SB = 50 mm
Set consists of:	2 HS-Profile knives; 2 SP-Limitors	

Profile knives and limitors produced to customer's profile.
Only use this cutterhead with original Leitz profile knives and limitors!













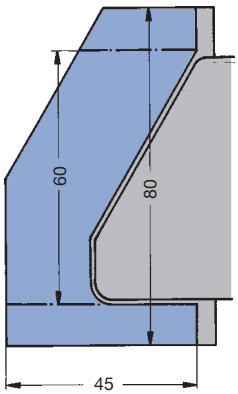

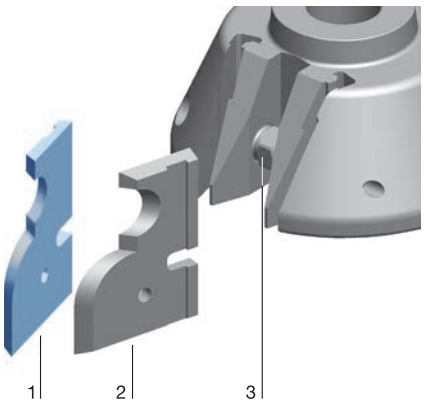

Profile cutterhead

Application:
For deep one-sided profiles with large profile depth, maximum 45 mm depth.
Easy to use, no setting gauge required.

Machine:
Spindle moulders and moulders.

Workpiece material:
Softwood and hardwood.

Technical information:
Cutting width up to 80 mm. See illustration for usable profile area.
Knife thickness 4.0 mm.

MAN feed, for one sided profiles with SB 60 - 80 mm
WM 530 1 02

D mm	SB mm	BO mm	BO_{max} mm	HD mm	PT_{max} mm	Z	n min^{-1}	ID
180	60 - 80	30	40	80	45	2	4500 - 6000	**026768** ●
180	60 - 80	40	40	80	45	2	4500 - 6000	**026769** □

Sales unit without knives and limitors.
Note: State direction of rotation when ordering knives.

Spare knives:

Part-no.	BEZ	ABM mm	QAL	ID
1	Blank Knife R/B	60x60x6	HS	**007280** ●
1	Blank Knife R/B	80x60x6	HS	**007281** ●
1	Blank Knife R/T	60x60x6	HS	**007282** ●
1	Blank Knife R/T	80x60x6	HS	**007283** ●
2	Limitor blank R/B (60)	58x59.2x6	SP	**005596** ●
2	Limitor blank R/B (80)	78x59.2x6	SP	**005597** ●
2	Limitor blank R/T (60)	58x59.2x6	SP	**005598** ●
2	Limitor blank R/T (80)	78x59.2x6	SP	**005599** ●

Spare parts:

Part-no.	BEZ	ABM mm	ID
3	Clamping screw	M16x1.5x36 LH/RH	**005958** ●
	Key	SW 17	**005456** ●

HS-special profiles and SP-profile limitors

PG I	Set of profile knives	SB = 60 mm
PG II	Set of profile knives	SB = 60 mm
PG I	Set of profile knives	SB = 80 mm
PG II	Set of profile knives	SB = 80 mm
Set consists of:		2 HS-Profile knives 2 SP-Limitors

Profile knives and limitors are produced to customer's profile.
Only use this cutterhead with original Leitz profile knives and limitors!

● available ex stock
□ available at short notice
Instruction manual visit www.leitz.org













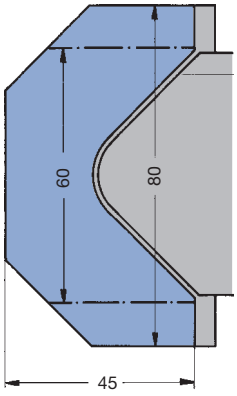

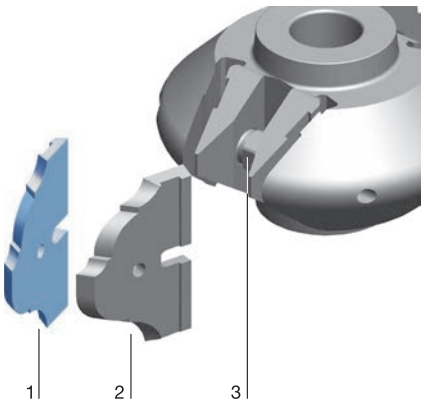

Profile cutterhead

Application:
For deep profiles with large profile depth, maximum 45 mm depth, with resharpenable profile knives and limitors. Easy to use, no setting gauge required.

Machine:
Spindle moulders and moulders.

Workpiece material:
Softwood and hardwood.

Technical information:
Cutting width up to 80.0 mm. Symmetrical tool body for right hand or left hand rotation as required.

MAN feed for symmetric profiles SB 60 - 80 mm
WM 520 1

D mm	SB mm	BO mm	BO_{max} mm	HD mm	PT_{max} mm	Z	n min^{-1}	ID
180	60 - 80	30	40	80	45	2	4500 - 6000	**026651** ●
180	60 - 80	40	40	80	45	2	4500 - 6000	**026652** □

Sales unit without knives and limitors.
Note: State direction of rotation when ordering knives.

Spare knives:

Part-no.	BEZ	ABM mm	QAL	ID
1	Blank Knife	60x60x6	HS	**007278** ●
1	Blank Knife	80x60x6	HS	**007279** ●
2	Limitor blank	58x59.2x6	SP	**005594** ●
2	Limitor blank	78x59.2x6	SP	**005595** ●

Spare parts:

Part-no.	BEZ	ABM mm	ID
3	Clamping screw	M16x1.5x36 LH/RH	**005958** ●
	Key	SW 17	**005456** ●

HS-special profiles and SP-profile limitors

PG I	Set of profile knives	SB = 60 mm
PG II	Set of profile knives	SB = 60 mm
PG I	Set of profile knives	SB = 80 mm
PG II	Set of profile knives	SB = 80 mm
Set consists of:		2 HS-Profile knives 2 SP-Limitors

Profile knives and limitors are produced to customer's profile.
Only use this cutterhead with original Leitz profile knives and limitors!













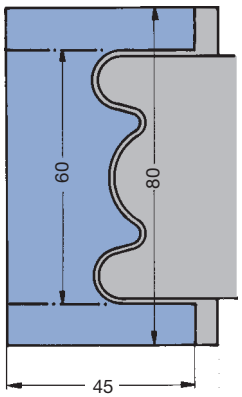

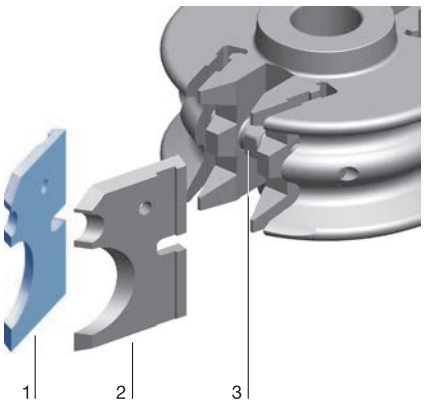

Profile cutterhead

Application:
For deep profiles with large profile depth, maximum 45 mm depth, with resharpenable profile knives and limitors. Easy to use, no setting gauge required.

Machine:
Spindle moulders and moulders.

Workpiece material:
Softwood and hardwood.

Technical information:
Cutting width up to 80.0 mm. Symmetrical tool body for right hand or left hand rotation as required.

MAN feed for symmetric closed profiles SB 60 - 80 mm
WM 540 1

D mm	SB mm	BO mm	BO_{max} mm	HD mm	PT_{max} mm	Z	n min^{-1}	ID
180	60 - 80	30	40	80	45	2	4500 - 6000	**026865** ●
180	60 - 80	40	40	80	45	2	4500 - 6000	**026866** □

Sales unit without knives and limitors.
Note: State direction of rotation when ordering knives.

Spare knives:

Part-no.	BEZ	ABM mm	QAL	ID
1	Blank Knife	60x60x6	HS	**007276** ●
1	Blank Knife	80x60x6	HS	**007277** ●
2	Limitor blank	58x59.2x6	SP	**005600** ●
2	Limitor blank	78x59.2x6	SP	**005601** ●

Spare parts:

Part-no.	BEZ	ABM mm	ID
3	Clamping screw	M16x1.5x36 LH/RH	**005958** ●
	Key	SW 17	**005456** ●

HS-special profiles and SP-profile limitors

	PG I	Set of profile knives	SB = 60 mm
	PG II	Set of profile knives	SB = 60 mm
	PG I	Set of profile knives	SB = 80 mm
	PG II	Set of profile knives	SB = 80 mm
	Set consists of:		2 HS-Profile knives
			2 SP-Limitors

Profile knives and limitors are produced to customer's profile.
Only use this cutterhead with original Leitz profile knives and limitors!

● available ex stock
□ available at short notice
Instruction manual visit www.leitz.org





Profile cutterhead VariForm

Application:
For cutting profiles. Different knives with maximum 15 mm profile depth can be mounted.

Machine:
Spindle moulders and moulders, double-end tenoners, edgebanding machines etc.

Workpiece material:
Softwood and hardwood (HW-30F), panel materials or glued wood (HW-10F).

Technical information:
Multi-purpose profile cutterhead for MAN feed with tungsten carbide special profile knives and backing plates and limitors. Resharpenable 3 to 4 times.

Tool body, MAN feed, Z 2
TT 531 1

D mm	TD mm	SB mm	BO mm	BO_{max} mm	PT_{max} mm	Z	n_{max} min^{-1}	ID
150	116	40 - 45	30	50	15	2	8000	**135100** ●
150	116	50 - 60	30	50	15	2	8000	**135101** ●

Supplied with clamping wedges, but without backing plates, limitors and knives.

Spare knives:

Teile-Nr.	SB mm	H mm	PT_{max} mm	ID HW-10F	ID HW-30F
1	40	40	15	**636227** ●	**636240** ●
1	45	40	15	**636231** ●	**636244** ●
1	50	40	15	**636284** ●	**636272** ●
1	60	40	15	**636288** ●	**636276** ●

Spare parts:

Part-no.	BEZ	ABM mm	for SB mm	ID
2	Backing plate VariForm	for knives 40x40x2.1	40	**645000** ●
2	Backing plate VariForm	for knives 45x40x2.1	45	**645001** ●
2	Backing plate VariForm	for knives 50x40x2.1	50	**645002** ●
2	Backing plate VariForm	for knives 60x40x2.1	60	**645003** ●
3	Limitor VariForm	for knives 40x40x2.1		**640000** ●
3	Limitor VariForm	for knives 45x40x2.1		**640001** ●
3	Limitor VariForm	for knives 50x40x2.1		**640002** ●
3	Limitor VariForm	for knives 60x40x2.1		**640003** ●
4	Clamping wedge	36x13,21x26	40/45	**009756** ●
4	Clamping wedge VariForm	44x13,21x24,25	50/60	**009760** ●
5	Allen screw with ISK 5	M10x12		**006044** ●
	Allen key	SW 5, L100		**117506** ●

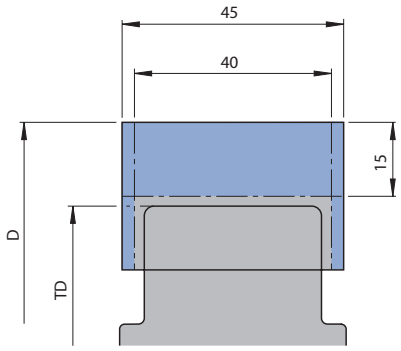

Tool body, SB 40/45 mm

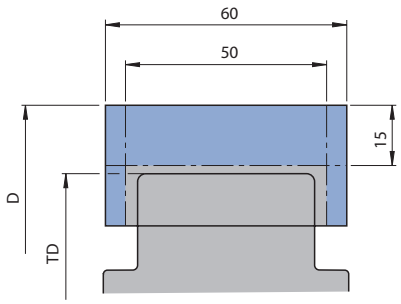

Tool body, SB 50/60 mm

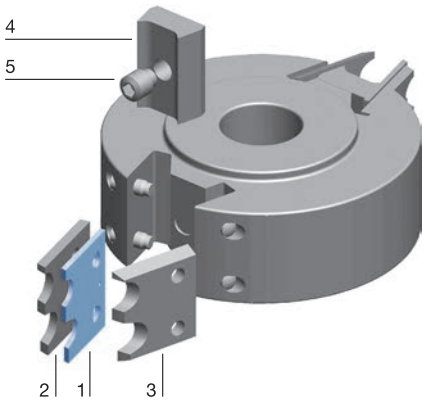





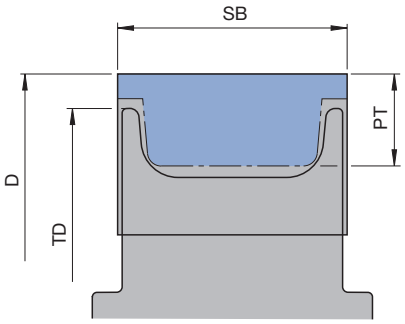

Tool body, U profile

Profile cutterhead VariForm

Application:
For cutting profiles. Different knives with maximum 20 mm profile depth can be mounted.

Machine:
Spindle moulders and moulders, double-end tenoners, edgebanding machines etc.

Workpiece material:
Softwood and hardwood (HW-30F), panel materials or glued wood (HW-10F).

Technical information:
Multi-purpose profile cutterhead for MAN feed with tungsten carbide special profile knives and backing plates and limitors. Resharpenable 3 to 4 times.

Part profiled tool body, MAN feed, Z 2 (U-profile).
TT 531 1

D mm	TD mm	SB mm	BO mm	BO_{max} mm	PT_{max} mm	Z	n_{max} min^{-1}	ID
180	165	40	30	50	20	2	7200	**135120** ●
180	165	60	30	50	20	2	7200	**135122** ●

Supplied with clamping wedges, but without backing plates, limitors and knives.

Spare knives:

Teile-Nr.	SB mm	H mm	PT mm	ID HW-10F	ID HW-30F
1	40	45	20	**636226** ●	**636239** ●
1	60	45	20	**636287** ●	**636275** ●

Spare parts:

Part-no.	BEZ	ABM mm	for SB mm	ID
2	Backing plate VariForm	for knives 40x45x2.1		**645004** ●
2	Backing plate VariForm	for knives 60x45x2.1		**645006** ●
3	Limitor VariForm	for knives 40x45x2.1		**640004** ●
3	Limitor VariForm	for knives 60x45x2.1		**640006** ●
4	Clamping wedge	36x13,21x26	40/45	**009756** ●
4	Clamping wedge	56x13,21x26	60	**009757** ●
5	Allen screw with ISK 5	M10x12		**006044** ●
	Allen key	SW 5, L100		**117506** ●

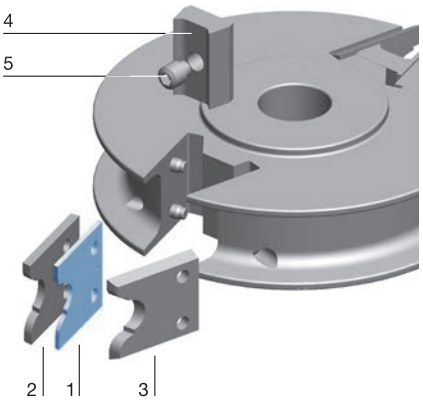

● available ex stock
□ available at short notice
Instruction manual visit www.leitz.org

Problem	Possible cause	Action
Surface errors Cutting quality	– RPM too low	Increase RPM and cutting speed, increase tool diameter
	– Wrong cutting geometry (shear angle too small for solid wood)	Measure, change tool
	– Spindle and tool tolerances too big	Check motor bearings and tolerances
	– Unbalanced tool	Check and balance
	– Cutting speed too high (tool rubs), number of teeth: feed speed ratio incorrect	Increase feed speed, reduce no. of teeth and RPM
	– Too few teeth, too high feed speed	Adjust number of teeth and feed speed accordingly
Wavy, rough surface	– Irregular workpiece feed	Check feed or conveyor unit
	– Low feed roller pressure, worn feed rollers	Increase feed roller pressure and rema-chine grooves in rollers
	– Workpieces too narrow or too short	Pay attention to machine manufacturer's guidelines
	– Chip removal too high	Pre-relieve or machine in several passes
	– Resin built up, or blunt tool	Clean and sharpen tool regularly
Surface errors Burn marks	– Cutting speed too high	Reduce RPM
	– Feed speed: number of teeth ratio wrong	Adjust number of teeth and feed speed accordingly
	– Tool rotates on stationary workpiece	Ensure constant feed through the machine
Surface errors Tear outs	– Wood moisture content too low	Check drying process
	– Knotty wood	Optimise with crosscut saw and longitudinal joints
Surface errors Chip marks	– Incorrect cutting geometry for workpiece material	Check, adjust or use new tool
	– Gap between knife and wedges	Clean and carefully mount knife and wedge
	– Gullet too small	Check and enlarge
	– Extraction hood and chip removal unit insufficient	Contact machine manufacturer
	– Weak dust extraction	Guideline: 30 m s^{-1} air speed
Profile error in workpiece – angle error – uneven	– Tool profile sets not identical, e.g. with sets for cutting with/against feed	Check and adjust tool set
	– Spindle not exactly vertical in feed direction or table plane	Check spindle is vertical with dial gauge at two positions with moving spindle (top and bottom of spindle)
	– Worn table and fence	Rework or replace table and fence
	– Angle tolerance between table and fence too large or incorrect adjustment of fence and zero line	Check and adjust angles, adjust fence to tool zero diameter
Power consumption of motor Feeding force	– Resin built up on tool, blunt tool	Clean and sharpen tool regularly
	– Tool gullet too small	Check and correct
	– Shear angle too small	Correct or use new tool
	– Cutting section too large	Relieve profile or machine in several passes

Rounding of cutting edges
Mechanical abrasion causes continuous rounding to the cutting edge when machining uniform materials.

The machined surface quality determines the size of the cutting edge wear. As a standard the width of wear VB of 0.2 to maximum 0.3 mm should not be exceeded.

Tipped tools must be resharpened regularly to ensure the economic efficiency of the tool.

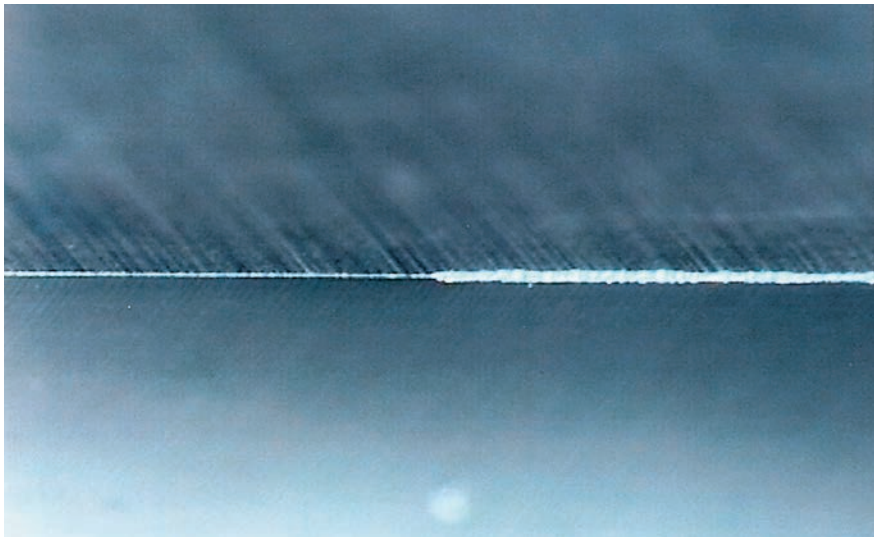

Typical cutting edge wear after machining spruce.

Chemical wear to cutting edges
When machining workpiece materials with a high tannic acid content (e.g. oak), the wear to the cutting edges is a combination of mechanical and chemical wear.

The cobalt binder material in the tungsten carbide is etched away by a chemical action prematurely damaging the cutting material.

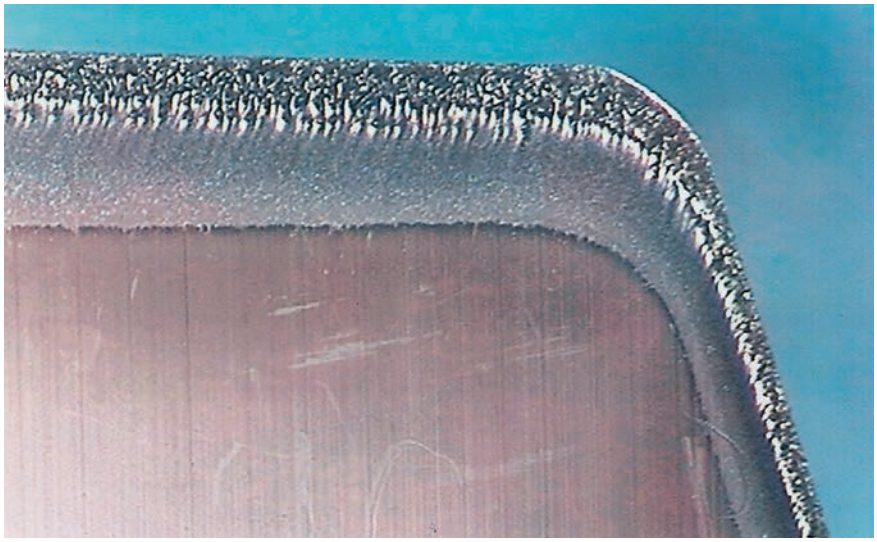

Chemical influence – cutting edge wear – after machining of oak.

Cutting edge damage through incorrect repair
With cutterhead/cutter set tools with HW cutting edges, the knives must be turned or replaced at the end of their performance time.

Resharpening on the face is not possible for safety reasons as it leads to a loss of clamping force and gaps between the knife and the clamping wedge, affect the surface quality.

Tools with turnblade/replaceable knives must be thoroughly cleaned and carefully mounted when changing knives.

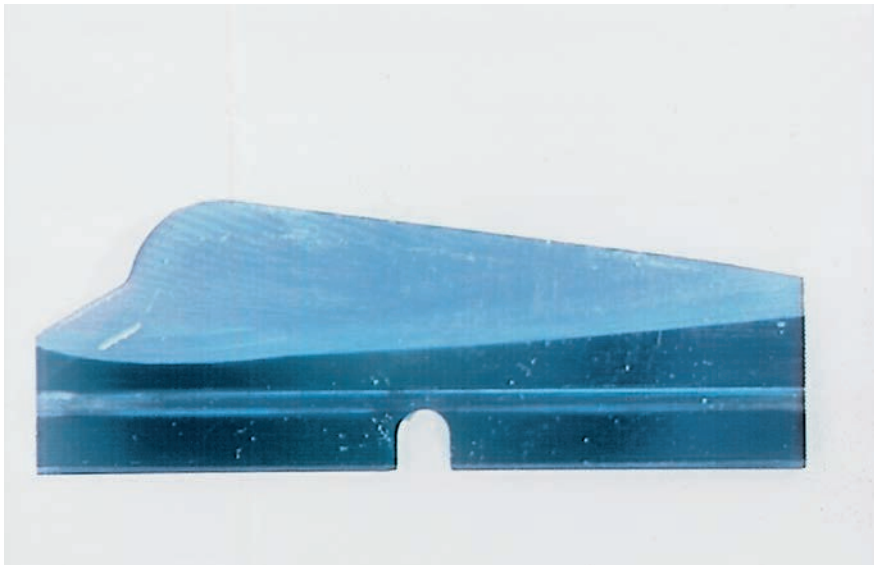

Damaged cutting edges due to incorrect repair.

Rounding of cutting edges
Mechanical abrasion causes continuous rounding to the cutting edge when machining uniform materials.

Resin build up can develop on the cutting edges because of the long performance time.

The machined surface quality determines the size of the cutting edge wear. As a standard the width of wear VB of 0.2 to maximum 0.3 mm should not be exceeded.

Run time performance can be increased by removing the resin build-up.

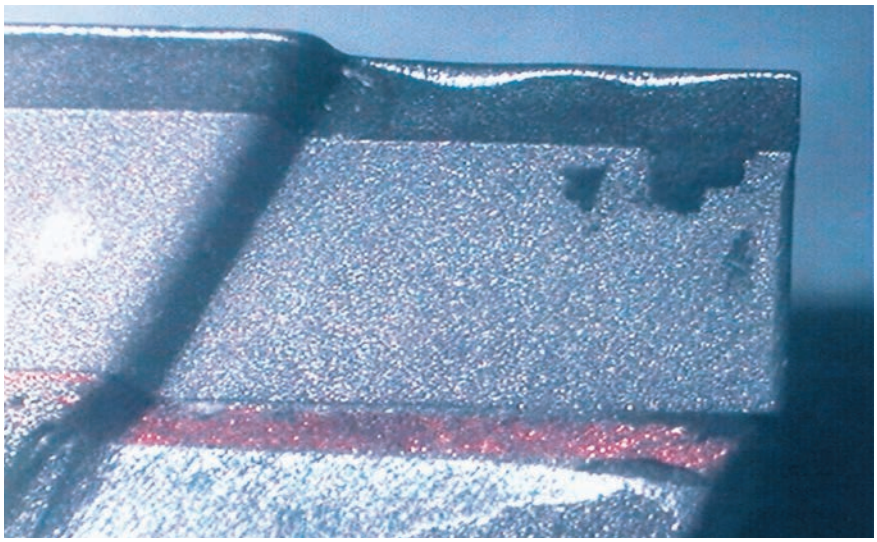

Cutting edge wear after machining GFK.

Rounding cutting edges and small chips
The cutting edge is damaged by small chips not caused by the usual wear when machining some wood-derived materials.

This is usually caused by foreign objects such as mineral particles in the workpiece material.

The wear to the cutting edges and the size of the chips to the cutting edge are important factors for economically efficient repair. Increasing cutting forces can totally destroy the cutting edges.

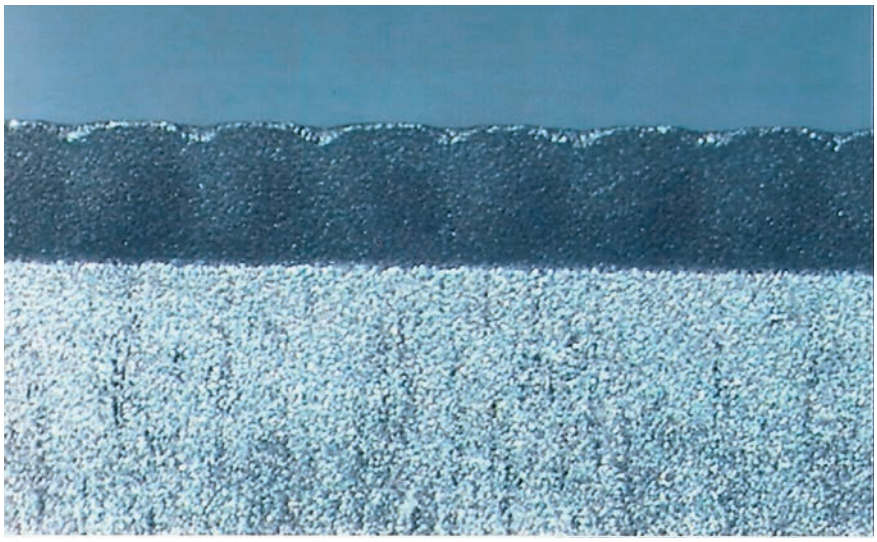

Cutting edge wear and cracks after machining HPL/CPL.

Cutting edge destruction
The cutting edge can be destroyed when machining non-uniform materials containing mineral or metallic particles. These particles cannot be detected prior to machining and limit the use of DP (DIA) tools for machining such materials.

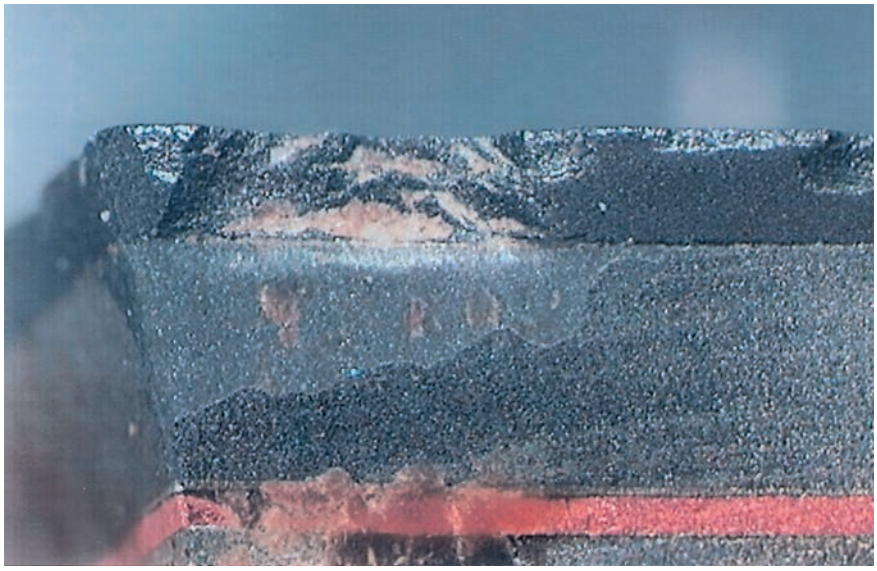

Cutting edge destruction by metallic particles.

Enquiry/order form special tools – manual feed

Customer details: Customer number: (if known)

☐ Enquiry
☐ Order

Delivery date: (not binding) CW

Company:

Street:

Town/Postcode:

Country:

Phone/fax:

Contact person:

Signature:

Date:

Enquiry/order no.:

Tool ID: (if known)

No. of pieces:

Work piece material:

☐ Solid wood Type:
☐ Wood-derived mat. Type:
☐ Coating Type:
☐ Other Type:
☐ Finish hogging

Moisture content: %
Density: g/cm³
Additional information:

Machine:

(Spindle moulder, moulder, double-end tenoner edgebanding machines, window machines etc.)

Manufacturer:
Year:
Type:

Spindle sequence in feed direction:

e.g.: 1 bottom, 2 right hand, 3 left hand, 4 top, 5 multi-purpose
or: 1 scoring, 2 hogging, 3 cutting, 4 square cutting, 5 finish cutting
or: 1 sawing, 2 slotting/tenoning, 3 cutting with feed, 4 cutting against feed

Motor no.:	Power:	RPM:	Spindle dimension:	add. Information:
1	kW	min^{-1}	mm	
2	kW	min^{-1}	mm	
3	kW	min^{-1}	mm	
4	kW	min^{-1}	mm	
5	kW	min^{-1}	mm	

Please state direction of rotation (LH/RH) or cutting direction (GGL/GLL) for each spindle.

Standard or high-precision motor

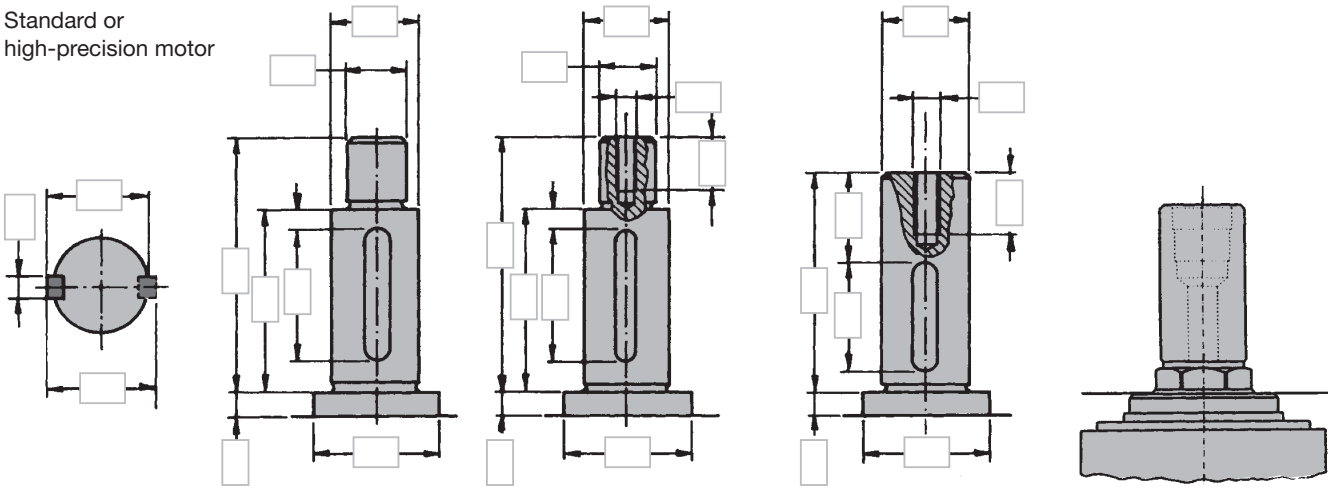

Enquiry/order form special tools – manual feed

Tool:

Tool type (see product information): (e.g. single part/tipped-/tool combination)

Dimension:

Diameter	mm
Cutting width:	mm
Bore:	mm
No. of teeth:	

Cutt. mat:
- ☐ HL
- ☐ HS
- ☐ ST
- ☐ HW
- ☐ DP

Adapter:
- ☐ No adaptor required
- ☐ Sleeve with anti-twist device
- ☐ Sleeve without anti-twist device
- ☐ Quick clamping element
- ☐ Hydro clamping element

Direction of rotation:
- ☐ Right hand rotation
- ☐ Left hand rotation

Cutting direction:
- ☐ Against feed
- ☐ With feed

Type of feed:
- ☐ Manual feed (MAN)
- ☐ Mechanical feed (MEC)

Feed speed:	min^{-1}
Cutting width (SB):	mm
Cutting depth:	mm

Notes:

Zero-diameter:	mm
Max. diameter.:	mm
Zero-height:	mm
Clamping length:	mm

Application:

Solid wood	☐ along grain	☐ across grain	☐ end grain
Wood-derived	☐ top layer	☐ middle layer	☐ top layer and middle layer

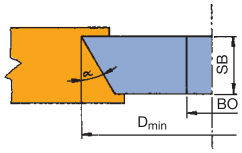

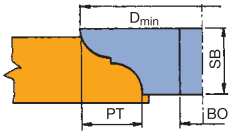

Technical information:

Tipped tool (bevel-/profile router):
Design: BG-Test, Z 2, round design
mech. feed, Z 3, Z 4, round design,
tooth shape: with/without spurs

Chart to determine min. tool diameter:
Valid for bevel cutterblock BO – 30 mm:
For bore 40 mm:
D + 10 mm
For bore 50 mm:
D + 20 mm

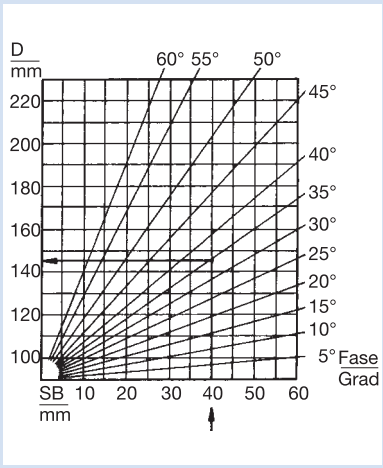

Formula to determine tool diameter:
Valid for profile cutterblock BO – 30 mm:
For bore 40 mm: D + 10 mm
For bore 50 mm: D + 10 mm
Formula: D_{min} = 100 + 2 x PT (mm)

Note:
Angles exceeding 45° and large profile depths require large diameters. The maximum possible RPM for the cutterblock diameter must not be exceeded. Profile sketches or profile drawings must show clearly if the workpiece material (wood) or cutterblock is shown. Please state side to table, direction of rotation, dimensions and conditions of application on all workpiece samples or drawings.

Tool combination with turnblade-/exchangeable knives:
Formula: D_{min} = 80 x 2 x PT (mm) – Valid for BO – 30 mm

Sketch for application plan, profile drawing, special motor spindle, etc.
Please specify workpiece support and fence side and/or workpiece face side top/bottom.

Key to pictograms


Grooving, horizontal and vertical

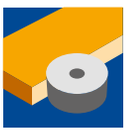
Jointing

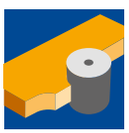
Copy shaping


Rebating


Bevelling

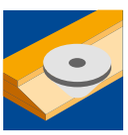
Panel raising


Profiling


Profiling joints



Manual feed


Tipped tool



Light alloy body


Interchangeable knives


Mechanical knife clamping, reversible


Mechanical knife clamping, non-adjustable


Resharpenable cutting face


Resharpenable clearance face



Alloyed tool steel



High-speed steel



Tungsten carbide



Polycrystalline diamond (PCD)



Carbide metal coating

www.leitz.org

SDZ/MA 09/2024 Subject to changes prior to technical developments. © Leitz GmbH & Co. KG

Routing

Leitz Lexicon Edition 7 | Version 3 | 05/2025



Explanation of abbreviations

A	=	dimension A
a_e	=	cutting thickness (radial)
a_p	=	cutting depth (axial)
ABM	=	dimension
APL	=	panel raising length
APT	=	panel raising depth
AL	=	working length
AM	=	number of knives
AS	=	anti sound (low noise design)
b	=	overhang
B	=	width
BDD	=	thickness of shoulder
BEM	=	note
BEZ	=	description
BH	=	tipping height
BO	=	bore diameter
CNC	=	Computerized Numerical Control
d	=	diameter
D	=	cutting circle diameter
D0	=	zero diameter
DA	=	outside Diameter
DB	=	diameter of shoulder
DFC	=	Dust Flow Control (optimised chip clearance)
DGL	=	number of links
DIK	=	thickness
DKN	=	double keyway
DP	=	polycrystalline diamond
DRI	=	rotation
FAB	=	width of rebate
FAT	=	depth of rebate
FAW	=	bevel angle
FLD	=	flange diameter
f_z	=	tooth feed
$f_{z\ eff}$	=	effective tooth feed
GEW	=	thread
GL	=	total length
GS	=	Plunging edge
H	=	height
HC	=	tungsten carbide, coated
HD	=	wood thickness (thickness of workpiece)
HL	=	high-alloyed tool steel
HS	=	high-speed steel (HSS)
HW	=	tungsten carbide (TCT)
ID	=	ident number
IV	=	insulation glazing
KBZ	=	abbreviation
KLH	=	clamping height
KM	=	edge breaker
KN	=	single keyway
KNL	=	combination pinhole consists of 2/7/42 2/9/46,35 2/10/60
L	=	length
l	=	clamping length
LD	=	left hand twist
LEN	=	Leitz standard profiles
LH	=	left hand rotation
M	=	metric thread
MBM	=	minimum order quantity
MC	=	multi-purpose steel, coated
MD	=	thickness of knife
min^{-1}	=	revolutions per minute (RPM)
MK	=	morse taper
m min^{-1}	=	metres per minute
m s^{-1}	=	metres per second
n	=	RPM
$n_{max.}$	=	maximum permissible RPM
NAL	=	position of hub
ND	=	thickness of hub
NH	=	zero height
NL	=	cutting length
NLA	=	pinhole dimensions
NT	=	grooving depth
P	=	profile
POS	=	cutter position
PT	=	profile depth
PG	=	profile group
QAL	=	cutting material quality
R	=	radius
RD	=	right hand twist
RH	=	right hand rotation
RP	=	radius of cutter
S	=	shank dimension
SB	=	cutting width
SET	=	set
SLB	=	slotting width
SLL	=	slotting length
SLT	=	slotting depth
SP	=	tool steel
ST	=	Cobalt-basis cast alloys, e.g. Stellite™
STO	=	shank tolerance
SW	=	cutting angle
TD	=	diameter of tool body
TDI	=	thickness of tool
TG	=	pitch
TK	=	reference diameter
UT	=	cutting edges with irregular pitch
V	=	number of spurs
v_c	=	cutting speed
v_f	=	feed speed
VE	=	packing unit
VSB	=	adjustment range
WSS	=	workpiece material
Z	=	number of teeth
ZA	=	number of fingers
ZF	=	tooth shape (cutting edge shape)
ZL	=	finger length

Notes to the Lexicon concerning the diagrams and tables

The statements made in the diagrams and tables relate to specific conditions and represent parameters from tests subjected to defined conditions. Variations when using tools in individual case due to special application conditions may be possible. Our support team will provide you with detailed information.



5. Routing











5.1 Sizing and grooving 2
5.1.1 Shank cutters HW and HW turnblade 5
5.1.2 Shank cutters HW-solid spiral design 22
5.1.3 Shank cutters DP 49
5.1.4 Slotting cutters and mortising bits 71

5.2 Jointing, rebating and bevelling 72
5.2.1 Jointing and rebating tools 74
5.2.2 Bevelling tools 81

5.3 Face milling and finishing 84
5.3.1 Planing cutters 86
5.3.2 V-groove and finishing cutters 87

5.4 Profiling 89
5.4.1 Finger joints 89
5.4.2 Tools for internal doors 94
5.4.3 Tools for furniture and interior construction 96
5.4.4 Tools for multi-purpose profiles 107
5.4.5 Tools for special profiles 117
5.4.6 Dovetail cutter 122

5.5 Portable routers 123
5.5.1 Tools for sizing and grooving 124
5.5.2 Tools for profiling 136
5.5.3 Tools for solid surface materials 148
5.5.4 Tools for composite panels 151
5.5.5 Drills for portable routers 152

Troubleshooting 155

Signs of wear 156

Enquiry/order form special tools – routing 158

Alphabetical product index 160

ID index 162

Working step/Application	Sizing and grooving.
Workpiece material [recommended cutting material]	Softwood and hardwood [SP - softwood only, HS, HW, HW solid]. Chipboard and fibre materials (MDF, HDF etc.), uncoated, plastic coated, veneered etc. [HW, HW solid, DP]. Plywood [HW, HW solid, DP]. Duromers [HW, HW solid, DP]. Plastomers [HS, HW, HW solid, DP]. Solid surface material (Corian, Varicor etc.) [HW, HW solid, DP]. Decorative laminates (HPL-compact laminate, Trespa etc.) [HW solid, DP]. Non-ferrous metal (Aluminium, copper etc.) [HS, HW, HW solid, DP]. In order to avoid melting and build-up on the cutting edge when machining aluminum, carbide tools should be operated using cooling lubricants (emulsion or minimum quantity lubrication MQL).
Machine	Stationary routers with/without CNC control. Milling machines with spindles to mount shank tools. Portable routers.
Operation	Sizing, separating cuts (full cut), climb cut, conventional cut.
Cutting edge type	**Straight cutting edge**

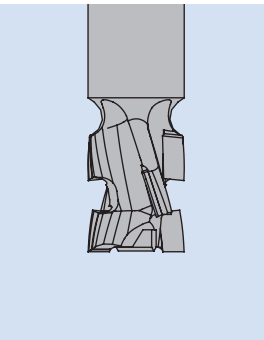

Straight edges with shear angle.

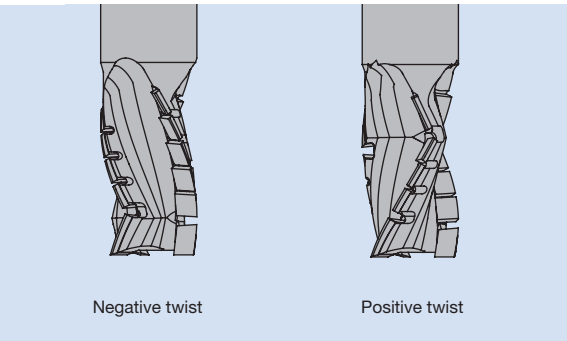

Straight edges with shear angle, spiral design.

Spiral cutting edges

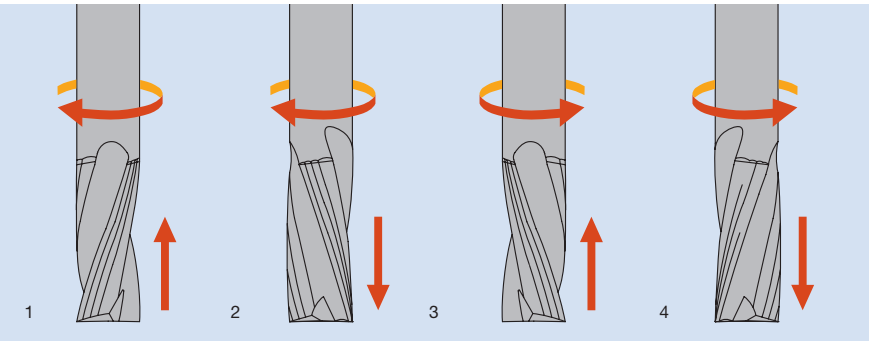

Fig. 1: RH-RD
positive twist,
workpiece face side to bottom,
good chip flow into dust extraction.

Fig. 2: RH-LD
negative twist,
workpiece face side to top,
supports workpiece clamping.

Fig. 3: LH-LD
positive twist,
workpiece face side to bottom,
good chip flow into dust extraction.

Fig. 4: LH-RD
negative twist,
workpiece face side to top,
supports workpiece clamping.

Technical features

The dimensions in the table below refer to the following tool parameters:

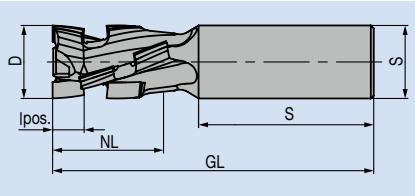

D	Diameter of the cutting edge
NL	Usable cutting length with specified number of teeth
AL	Possible working length, reached in separate steps
GL	Total length of the tool
S	Diameter of the shank, e.g. S25 x 60 -> Ø 25 mm Maximum clamping length of the shank, e.g. S25 x 60 -> 60 mm
lpos.	Length of the positive axis angle for tools with alternating twist

Shank tolerances

	Shank diameter	
Tools for	< 12 mm	≥ 12 mm
CNC routers	h6	g6
Portable routers	g7/h8	–

Application parameters

RPM/feed speed
The recommended RPM and feed speeds are detailed in the diagrams next the tool tables.

Operation notes

Recommended plunging methods:
The following plunging methods are recommended for sizing and grooving tools:

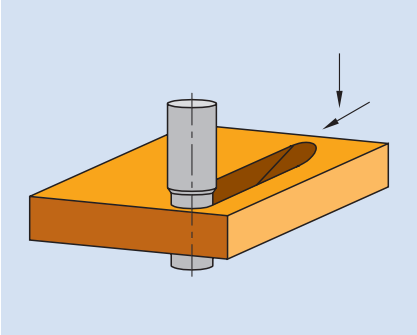

Ramp plunging

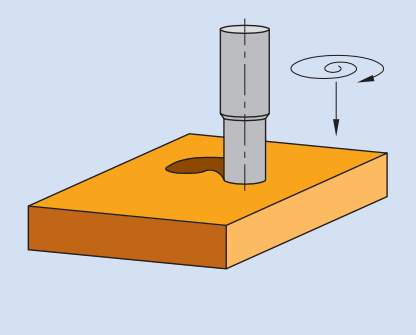

Spiral plunging

Router bits with mainly negative cutting shear angles and HW solid router bits with RH/LD and LH/RD and router bits without plunging edge are not suitable for axial plunging.

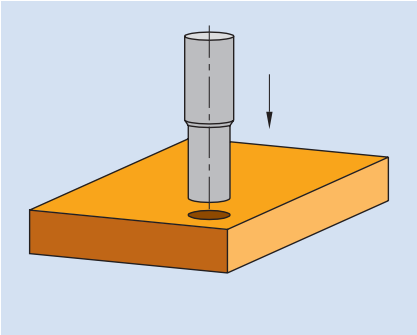

Axial plunging

Position the tool relative to the workpiece

Tools with high negative shear angle.

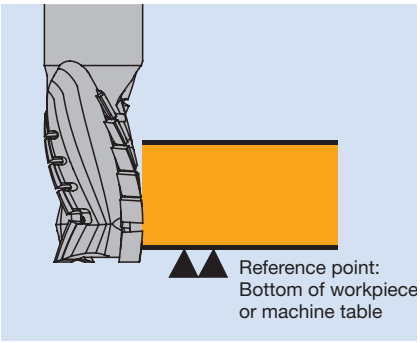

Tools with high positive shear angle..

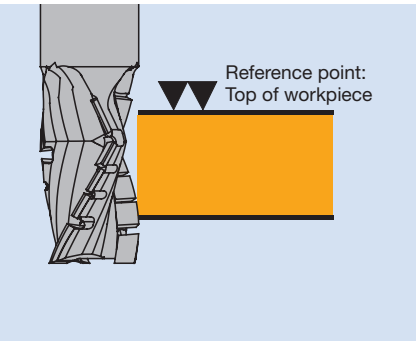

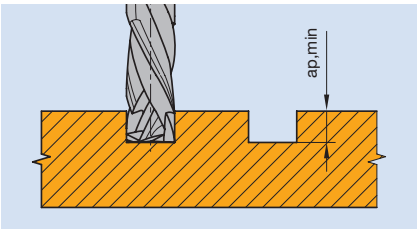

Tools with alternating twist should plunge at least 0.5 mm deeper into the material than the specified lpos.
$a_{p\ min}$ = lpos. + 0.5 mm

Workpiece clamping

Sufficient workpiece clamping is very important on stationary machines. Insufficient clamping can reduce both the cut quality and tool life considerably. Panels can be held in place with vacuum clamping, but sometimes additional mechanical clamping is required.
Small and and arched workpieces in particular require special jigs or clamping devices which must be made by the customer or sourced from specialist suppliers.

Chip removal

For optimum chip removal, tools with predominantly or only positive shear cut should be used. Check there is sufficient workpiece clamping.

Machining deep slots

Cutting lock mortises in door production.

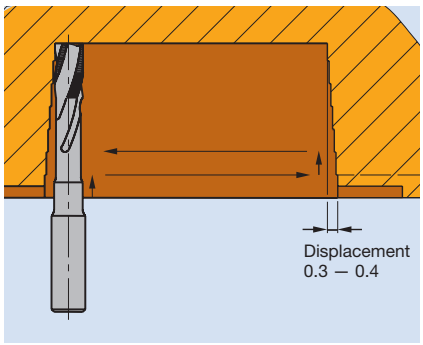

Reducing the slot cutting width by approx 0.1 mm per stroke reduces the risk of breakage as the tool does not touch the side of the slot with the full length of the tool.








HW

Feed speed v_f depending on cutting depth a_p

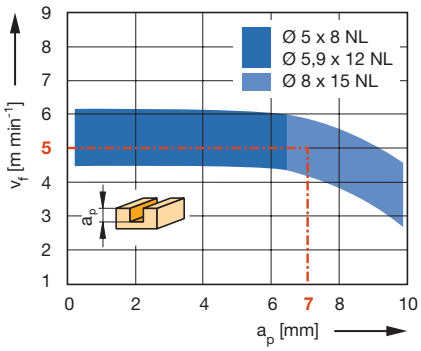

Workpiece material: Duromers, plastomers, compound materials
Operation: Grooving, sizing
Speed: n = 16000 - 18000 min^{-1}

Grooving cutter, straight cut

Application:
Router cutter for grooving.

Machine:
Stationary routers with/without CNC control, machining centres, milling machines with spindles to mount shank tools, portable routers.

Workpiece material:
Softwood and hardwood, chipboard and fibre materials (MDF, HDF etc.), uncoated, plastic coated, veneered etc., laminated veneer lumber (plywood, multiplex plywood etc.), duromers, plastomers, solid surface material (Corian, Varicor etc.), decorative laminates (HPL-compact laminate, Trespa etc.), non-ferrous metals (aluminium, copper etc.), PVC profile extrusions.

Technical information:
Straight cut. End-ground for plunging. Large resharpening area. Good cutting performance in plastic and compound materials. When machining aluminum, carbide tools should be operated using cooling lubricants (emulsion or minimum quantity lubrication MQL).

HW solid, Z 1
WO 120 2

D mm	GL mm	NL mm	S mm	QAL	DRI	ID
8	70	27	8x30	HW solid	RH	**044468** ●

RPM: n_{max} = 24000 min^{-1}








HW

Feed speed v_f depending on cutting depth a_p

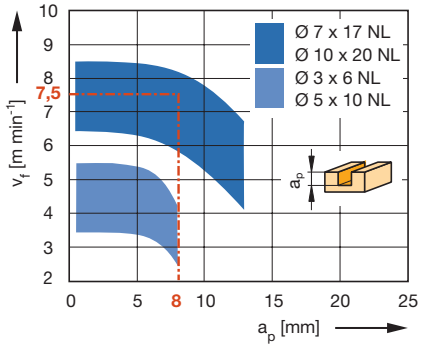

Workpiece material: Plastic coated chipboard
Operation: Grooving
Speed: n = 18000 min^{-1}
Correction factor for v_f:
Solid wood = 0.8; Glulam = 0.8;
Machining across grain = 0.7

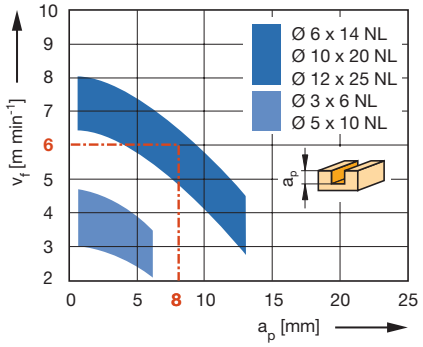

Grooving cutter, straight cut

Application:
Router cutter for sizing and grooving.

Machine:
Stationary routers with/without CNC control, machining centres, milling machines with spindles to mount shank tools, portable routers.

Workpiece material:
Softwood and hardwood, chipboard and fibre materials (MDF, HDF etc.), uncoated, plastic coated, veneered etc., laminated veneer lumber (plywood, multiplex plywood etc.), duromers, plastomers, solid surface material (Corian, Varicor etc.), decorative laminates (HPL-compact laminate, Trespa etc.), non-ferrous metals (aluminium, copper etc.), PVC profile extrusions.

Technical information:
Straight cut. End-ground for plunging. Large resharpening area. Short design for increased stability and reduced vibration. Long design for increased cutting depth (recommended in several steps). When machining aluminum, carbide tools should be operated using cooling lubricants (emulsion or minimum quantity lubrication MQL).

HW solid, Z 2, short design
WO 120 1 16

D mm	GL mm	NL mm	S mm	DRI	ID
3	50	6	6x30	RH	**041979** ●
4	50	7	6x30	RH	**041952** ●
4,5	50	8	6x30	RH	**041953** ●
5	50	10	6x30	RH	**041954** ●
6	50	14	6x30	RH	**041956** ●
7	55	17	8x30	RH	**041958** ●
8	55	20	8x30	RH	**041985** ●
9	70	18	10x40	RH	**041961** ●
10	70	20	10x40	RH	**041962** ●
12	70	25	12x40	RH	**041963** ●

HW solid, Z 2, short design, reinforced shank
WO 120 1 16

D mm	GL mm	NL mm	S mm	DRI	ID
3	55	6	8x40	RH	**041981** ●
4	55	10	8x40	RH	**041982** ●
5	55	12	8x40	RH	**041983** ●
6	55	14	8x40	RH	**041984** ●

HW solid, Z 2, long design
WO 120 1 16

D mm	GL mm	NL mm	S mm	DRI	ID
3	60	12	6x30	RH	**041964** ●
4	60	12	6x40	RH	**041965** ●
5	80	18	6x40	RH	**041966** ●

RPM: n_{max} = 24000 min^{-1}

Workpiece material: Duromers, plastomers, Corian
Operation: Grooving
Speed: n = 16000 - 18000 min^{-1}

● available ex stock
□ available at short notice
Instruction manual visit www.leitz.org





Grooving cutter, Z 2

Application:
Router cutter for sizing and grooving.

Machine:
Stationary routers with/without CNC control, machining centres, milling machines with spindles to mount shank tools, portable routers.

Workpiece material:
Softwood and hardwood, chipboard and fibre materials (MDF, HDF etc.), uncoated, plastic coated, veneered etc., laminated veneer lumber (plywood, multiplex plywood etc.).

Technical information:
Straight cut, tungsten carbide plunging tip.

HW, Z 2, shank 9.5 / 12 mm
WO 120 1 01

D mm	GL mm	NL mm	S mm	QAL	DRI	ID
3	34	5	9,5x20	HW solid	RH	**038014** ●
5	39	7	9,5x20	HW solid	RH	**038018** ●
12	72	25	12x40	HW	RH	**038115** ●
14	76	28	12x40	HW	RH	**038117** ●
16	90	35	12x40	HW	RH	**038147** ●
18	90	35	12x40	HW	RH	**038148** ●
20	90	35	12x40	HW	RH	**038149** ●
25	92	41	12x40	HW	RH	**038125** ●

HW, Z 2, shank 10 mm
WO 120 1 01

D mm	GL mm	NL mm	S mm	QAL	DRI	ID
4	49	10	10x35	HW solid	RH	**038053** ●
5	49	12	10x35	HW solid	RH	**038054** ●
6	53	14	10x35	HW solid	RH	**038055** ●
7	55	17	10x35	HW solid	RH	**038056** ●
8	60	20	10x35	HW solid	RH	**038057** ●
10	70	23	10x35	HW	RH	**038058** ●
12	70	23	10x35	HW	RH	**038059** ●

RPM: n = 16000 - 36000 min^{-1}

Feed speed v_f depending on cutting depth a_p

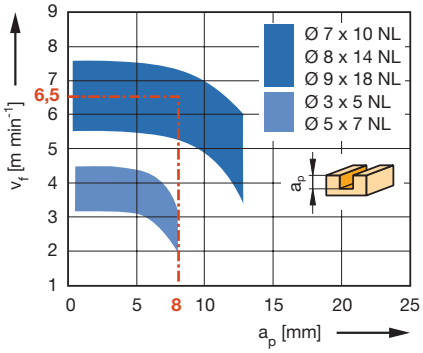

Workpiece material: Plastic coated chipboard
Operation: Grooving
Speed: n = 18000 min^{-1}
Correction factor for v_f:
Solid wood = 0.8; Glulam = 0.8;
Machining across grain = 0.7

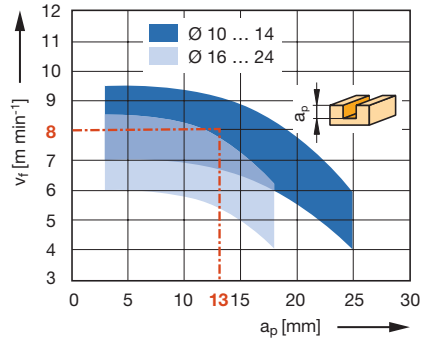

Workpiece material: Plastic coated chipboard
Operation: Grooving
Speed: n = 18000 min^{-1}
Correction factor for v_f:
Solid wood = 0.8; Glulam = 0.8;
Machining across grain = 0.7

● available ex stock
□ available at short notice
Instruction manual visit www.leitz.org





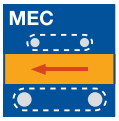



HW

Feed speed v_f depending on cutting depth a_p

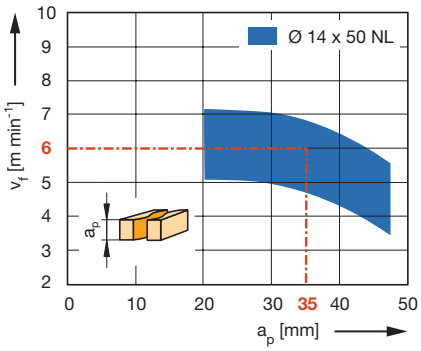

Workpiece material: Plastic coated or veneered chipboard
Operation: Sizing
Speed: n = 18000 min^{-1}
Correction factor for v_f: Machining across grain = 0.7

Grooving cutter with shear angle

Application:
Router cutter for sizing, grooving and cutting apertures.

Machine:
Stationary routers with/without CNC control, machining centres, milling machines with spindles to mount shank tools.

Workpiece material:
Softwood and hardwood, chipboard and fibre materials (MDF, HDF etc.), uncoated, plastic coated, veneered etc., laminated veneer lumber (plywood, multiplex plywood etc.).

Technical information:
Finishing type Z 1+1 particularly suitable to machine apertures in furniture and doors. Cutting edges with alternating shear angles for tear-free edges on both sides.

HW, Z 1+1, finishing cut
WO 140 2

D mm	GL mm	NL mm	S mm	DRI	ID
14	100	50	12x50	RH	**038204** ●
14	100	50	14x50	RH	**038205** ●
14	120	50	25x60	RH	**038206** ●

RPM: n_{max} = 24000 min^{-1}

● available ex stock
□ available at short notice
Instruction manual visit www.leitz.org





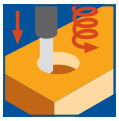

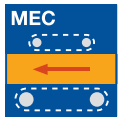





Feed speed v_f depending on cutting depth a_p

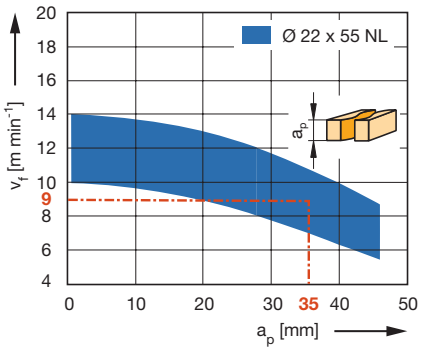

Workpiece material: Plastic coated chipboard
Operation: Sizing
Speed: n = 18000 min^{-1}
Correction factor for v_f: MDF = 0.8

Roughing router cutter in turnblade design

Application:
Router cutter for sizing and grooving to roughing quality.

Machine:
Stationary routers with/without CNC control, machining centres, milling machines with spindles to mount shank tools.

Workpiece material:
Softwood and hardwood, chipboard and fibre materials (MDF, HDF etc.), uncoated, laminated veneer lumber (plywood, multiplex plywood etc.).

Technical information:
Tungsten carbide turnblade knives arranged in irregular pitch for quiet cutting.
With turnblade knife plunging tip.

HW, Z 1+1
WL 101 2

D mm	GL mm	NL mm	S mm	DRI	ID
22	125	55	25x60	RH	**041922** ●

RPM: n = 16000 - 24000 min^{-1}

Spare knives:

BEZ	ABM mm	QAL	VE PCS	ID
Turnblade knife	9x12x1,5	HW-05F	10	**005158** ●
Turnblade knife	12x12x1.5	HW-05F	10	**005081** ●

Spare parts:

BEZ	ABM mm	ID
Oval head screw Torx® 15	M4x5	**007037** ●
Oval head screw Torx® 15	M4x6	**006225** ●
Torx® key	Torx® 15	**005457** ●



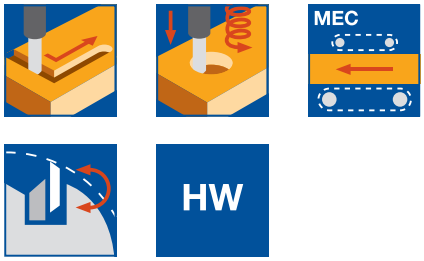

Feed speed v_f depending on RPM n

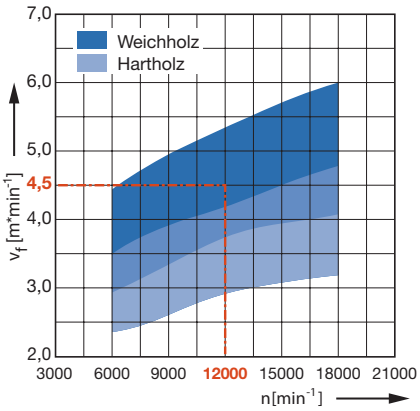

Workpiece material: Softwood, Hardwood
Operation: Sizing and grooving
Axial infeed: a_p = 20 - 50 mm
Correction factor for v_f: Glulam = 0.8

Roughing router cutter in turnblade design - HeliCut 11

Application:
Router for sizing and grooving to roughing/finishing quality. Cutting of tenons for frame constructions.

Machine:
Stationary routers with/without CNC control, machining centres, joinery machines, milling maschines with spindles to mount shank tools.

Workpiece material:
Softwood and hardwood, glulam and laminated wood.

Technical information:
Spiral shaped edge arrangement of the tungsten carbide turnblades (4 times turnable). Tungsten carbice turnblade plunging knife with chipbreakers for good chip removal (for D = 40 mm). Tangential fixing of the knives in the dust protected area. Deep boreholes are to be cut circularly.

HW, Z 2+2
WL 101 2

D mm	GL mm	NL mm	S mm	DRI	ID
30	125	60	20x50	RH	**041928** ●
30	195	120	30x53	RH	**041929** ●
40	235	160	30x53	RH	**041927** ●

RPM: n = 6000 - 18000 min^{-1}

Note:
Tool shank S30x53 with recess suitable for many conventional joinery machines.
Not suitable for use in shrink-fit chucks.
On machines with automatic tool changer use collet chuck ER40 together with collet d = 30 mm, ID **679039**.

Spare knives:

BEZ	Knife	ABM mm	for D mm	QAL	VE PCS	ID
Turnblade knife	Peripheral tip	11x11x1,5		HW	10	**602515** ●
Turnblade knife	Peripheral tip	11x11x1,5		TDC		**602904** ●
Exchange knife	Plunging tip	20,6x12.7x2	30	HW	10	**602531** ●
Exchange knife	Plunging tip	22x12,7x2	40	HW		**602516** ●

Spare parts:

BEZ	ABM mm	ID
Countersink screw, Torx® 15	M4x6	**114039** ●
Countersink screw, Torx® 20	M5x6	**114040** ●
Torx® key	Torx® 15	**005457** ●
Torx® key	Torx® 20	**117520** ●

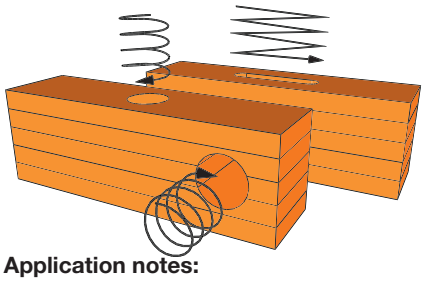

Application notes:
Circular pockets and boreholes of a depth > 1xD have to be cut circularly.
Use ramp-in cutting to produce mortises.

● available ex stock
□ available at short notice
Instruction manual visit www.leitz.org









HW



Tool shank S30x53

Roughing/finishing router cutter in turnblade design - HeliCut Monoblock

Application:
Router for sizing, drilling and grooving to roughing/finishing quality. Cutting of tenons for frame constructions.

Machine:
Stationary routers with/without CNC control, machining centres, joinery machines, milling maschines with spindles to mount shank tools.

Workpiece material:
Softwood and hardwood, glulam and laminated wood.

Technical information:
Spiral shaped edge arrangement of the tungsten carbide turnblades (4 times turnable). Tungsten carbice turnblade plunging knife with chipbreakers for good chip removal (for D = 40 mm). Tangential fixing of the knives in the dust protected area.

HW, Z 1+1
WL 101 2

D mm	A mm	GL mm	NL mm	S mm	DRI	ID
40	225		180	HSK-E 63	RH	**041932** ●
40	225		180	HSK-F 63	RH	**041933** ●
40	235		180	HSK-F 80	RH	**041934** ●
40	238		180	HSK-A 100	RH	**041935** ●
40		235	160	30x53	RH	**041937** ●
40		260	180	30x53	RH	**041936** ●

RPM: Cutting n = 6000 - 18000 min^{-1}
Drilling n = 3000 - 4000 min^{-1}

Note:
Tool shank S30x53 with recess suitable for many conventional joinery machines.
Not suitable for use in shrink-fit chucks.
On machines with automatic tool changer use collet chuck ER40 together with collet d = 30 mm, ID **679039**.

Application note:
Cutting data for circular pocket, tenon, groove and bore machining must be adapted to the conditions.

Spare knives:

BEZ	Knife	ABM mm	for D mm	QAL	VE PCS	ID
Turnblade knife	Peripheral tip	11x11x1,5		HW	10	**602515** ●
Exchange knife	Plunging tip	22x12,7x2	40	HW		**602516** ●

Spare parts:

BEZ	ABM mm	ID
Countersink screw, Torx® 15	M4x6	**114039** ●
Countersink screw, Torx® 20	M5x6	**114040** ●
Torx® key	Torx® 15	**005457** ●
Torx® key	Torx® 20	**117520** ●



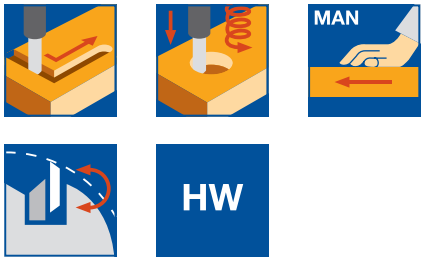

Grooving router cutter in turnblade design

Application:
Router cutter for sizing and grooving to finish quality.

Machine:
Portable routers, limited suitable: stationary routers with/without CNC control, machining centres.

Workpiece material:
Softwood, chipboard and fibre materials (MDF, HDF etc.), uncoated, plastic coated, veneered etc.

Technical information:
Tungsten carbide turnblade knife clamped by wedge. Design without plunging tip only suitable for ramp plunging. Design with plunging tip limited suitable for axial plunging.

HW, Z 1, without plunging tip
WL 100 1

D mm	GL mm	NL mm	S mm	DRI	ID
8	65	20	10x40	RH	**041624** ●
9	65	20	10x40	RH	**041631** ●
10	65	20	10x40	RH	**041638** ●
10	70	25	10x40	RH	**041643** ●
11	75	30	10x40	RH	**041655** ●
12	76	30	10x40	RH	**041667** ●
14	86	40	12x40	RH	**041679** ●
16	94	50	12x40	RH	**041685** ●
16	109	50	16x50	RH	**041714** ●

RPM: D 8 - 12 mm: n = 18000 - 24000 min^{-1}
D 14 - 20 mm: n = 16000 - 24000 min^{-1}

Spare knives:

BEZ	ABM mm	for D mm	NL mm	QAL	VE PCS	ID
Turnblade knife	20x4,1x1,1	8 - 9	20	HW-05	10	**005186** ●
Turnblade knife	20x5,5x1,1	10 - 12	20	HW-05	10	**005187** ●
Turnblade knife	25x5,5x1,1	10	25	HW-05	10	**005188** ●
Turnblade knife	30x5,5x1,1	11 - 24	30	HW-05	10	**005189** ●
Turnblade knife	40x5,5x1,1	14	40	HW-05	10	**005190** ●
Turnblade knife	50x5,5x1,1	14 - 24	50	HW-05	10	**005191** ●

Spare parts:

BEZ	ABM mm	for D mm	NL mm	ID
Clamping wedge	17,5x5,15x2,8	8 - 9	20	**009258** ●
Clamping wedge	17,5x6,45x4	10 - 11	20	**009259** ●
Clamping wedge	22,5x6,54x4	10	25	**009260** ●
Clamping wedge	27,5x6,45x4	11	30	**009261** ●
Clamping wedge	27,5x7,35x3,7	12 - 14	30	**009263** ●
Clamping wedge	37,5x7,35x3,7	14	40	**009264** ●
Clamping wedge	47,5x10,28x4,2	16 - 24	50	**009266** ●
Countersink screw, Torx® 8	M2.5x5.7	8 - 11		**006231** ●
Countersink screw, Torx® 8	M3x7.6	12 - 14		**006233** ●
Countersink screw, Torx® 15	M4x9.5	16		**007847** ●
Countersink screw, Torx® 15	M4x11.5	16 - 20		**006234** ●

Feed speed v_f depending on cutting depth a_p

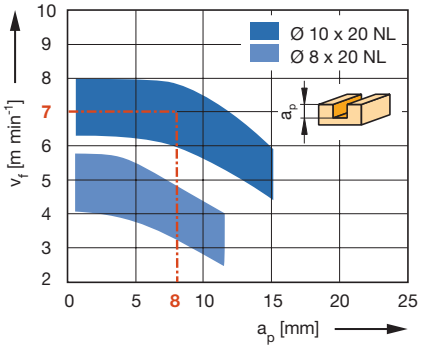

Workpiece material: Plastic coated chipboard
Operation: Grooving, sizing
Speed: n = 18000 min^{-1}
Correction factor for v_f: MDF = 0.8

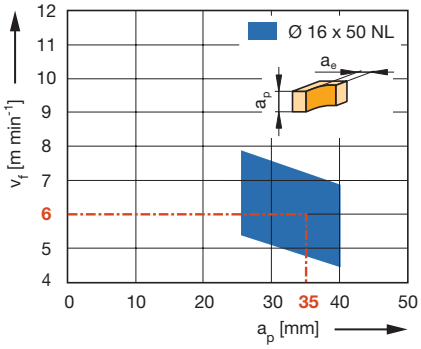

Workpiece material: Plastic coated chipboard
Operation: Jointing (max. a_e = 3 mm)
Speed: n = 18000 min^{-1}
Correction factor for v_f: MDF = 0.8

● available ex stock
□ available at short notice
Instruction manual visit www.leitz.org

Feed speed v_f depending on cutting depth a_p

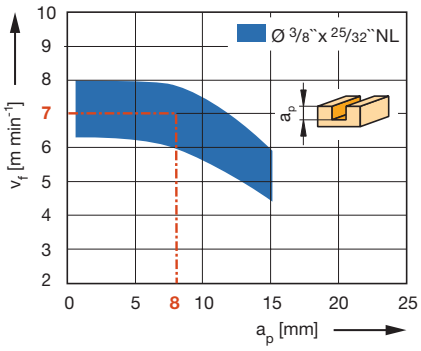

Workpiece material: Plastic coated chipboard
Operation: Grooving, sizing
Speed: n = 18000 min^{-1}
Correction factor for v_f: MDF = 0.8

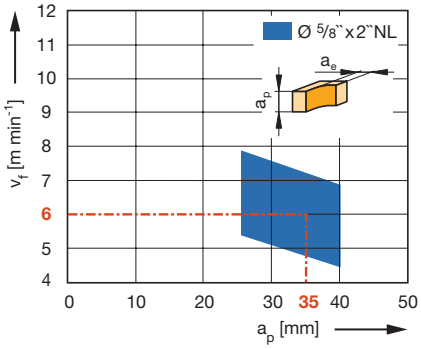

Workpiece material: Plastic coated chipboard
Operation: Jointing
(maximum chip removal a_e = 3 mm)
Speed: n = 18000 min^{-1}
Correction factor for v_f: MDF = 0.8

HW, Z 1, with plunging tip
WL 100 1

D mm	GL mm	NL mm	S mm	DRI	ID
14	107	45	12x40	RH	**041722** ●

RPM: n = 16000 - 24000 min^{-1}

Spare knives:

BEZ	ABM mm	NL mm	QAL	VE PCS	ID
Turnblade knife	50x5,5x1,1	50	HW-05	10	**005191** ●

Spare parts:

BEZ	ABM mm	ID
Clamping wedge with plunging tip	45x3,7x7,35	**009749** ●
Countersink screw, Torx® 8	M3x7.6	**006233** ●

HW, Z 1, without plunging tip, inch types
WL 100 1

D in	NL in	GL in	S in	DRI	ID
1/2“	1 3/16“	2 3/4“	1/2“ x 1 3/8“	RH	**041060** ●
3/4“	2“	3 7/8“	3/4“ x 1“	RH	**041067** ●

RPM: D 1/2“: n = 18000 - 24000 min^{-1}
D 3/4“: n = 16000 - 24000 min^{-1}

Spare knives:

BEZ	ABM mm	for D in	NL in	QAL	VE PCS	ID
Turnblade knife	30x5,5x1,1	1/2“	1 3/16“	HW-05	10	**005189** ●
Turnblade knife	50x5,5x1,1	5/8“ - 3/4“	2“	HW-05	10	**005191** ●

Spare parts:

BEZ	ABM mm	for D in	NL in	ID
Clamping wedge	27,5x7,35x3,7	1/2“ - 35/64“	1 3/16“	**009263** ●
Clamping wedge	47,5x10,28x4,2	5/8“ - 3/4“	2“	**009266** ●
Countersink screw, Torx® 8	M3x7.6	1/2“		**006233** ●
Countersink screw, Torx® 15	M4x11.5	5/8“ - 3/4“		**006234** ●





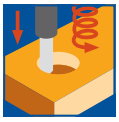

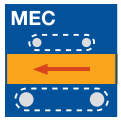





Router cutter in turnblade design

Application:
Router cutter for sizing and grooving to finish quality. For grooving with constant tool diameter.

Machine:
Stationary routers with/without CNC control, machining centres, milling machines with spindles to mount shank tools.

Workpiece material:
Softwood and hardwood, chipboard and fibre materials (MDF, HDF etc.), uncoated, plastic coated, veneered etc., laminated veneer lumber (plywood, multiplex plywood etc.), duromers, plastomers, solid surface material (Corian, Varicor etc.), decorative laminates (HPL-compact laminate, Trespa etc.).

Technical information:
Straight cut. Knife tip designed for seamless cut. Teflon coated tool body for reduced resin and glue build up. With tungsten carbide plunging tip. Suitable for machining the narrow edge of painted or foil coated MDF.

HW, Z 1, NL 30 mm
WL 101 1

D mm	GL mm	NL mm	S mm	ID LH	ID RH
16	85	30	12x40		**040867** ●
16	95	30	16x50	**040877** ●	**040878** ●
16	95	30	20x50		**040879** ●
16	105	30	25x60		**040872** ●
18	85	30	12x40		**040869** ●
20	85	30	12x40		**040871** ●
20	95	30	20x50		**040882** ●

RPM: n = 16000 - 20000 min^{-1}

Spare knives:

BEZ	Knife	ABM mm	for D mm	QAL	VE PCS	ID
Turnblade knife	Plunging tip	7,6x12x1,5	16 - 18	HW-05F	10	**005080** ●
Turnblade knife	Plunging tip	9x12x1,5	20 - 24	HW-05F	10	**005158** ●
Turnblade knife	Peripheral tip	30x12x1,5		HW-05F	10	**005161** ●

Spare parts:

BEZ	Knife	ABM mm	for D mm	ID
Screw	Plunging tip	M3.5x4 (head D7)	16 - 20	**006068** ●
Screw	Peripheral tip	M3.5x4 (head D9)	16 - 20	**006226** ●
Torx® key		Torx® 15		**005457** ●

Feed speed v_f depending on cutting depth a_p

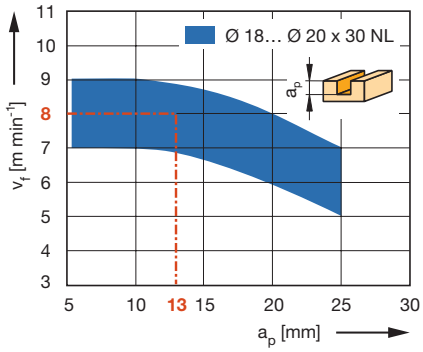

Workpiece material: Plastic coated chipboard
Operation: Grooving, sizing
Speed: n = 18000 min^{-1}
Correction factor for v_f: MDF = 0.8

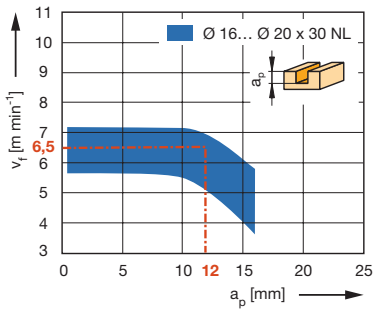

Workpiece material: Hardwood, along grain
Operation: Grooving, sizing
Speed: n = 18000 min^{-1}
Correction factor for v_f:
Machining across grain = 0.8

● available ex stock
□ available at short notice
Instruction manual visit www.leitz.org

Feed speed v_f depending on cutting depth a_p

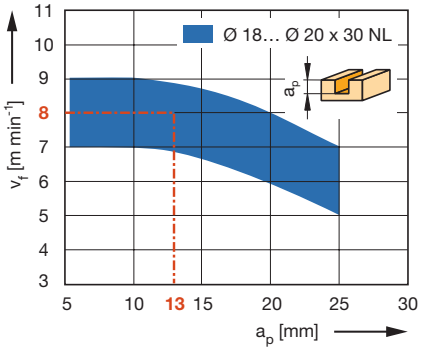

Workpiece material: Plastic coated chipboard
Operation: Grooving, sizing
Speed: n = 18000 min^{-1}
Correction factor for v_f: MDF = 0.8

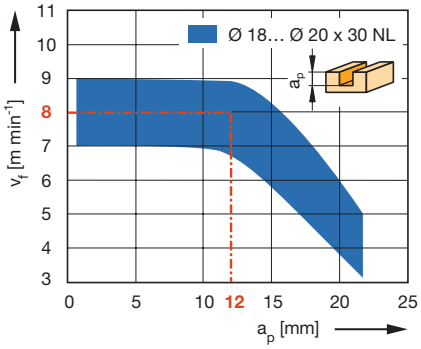

Workpiece material: Softwood, along grain
Operation: Grooving, sizing
Speed: n = 18000 min^{-1}
Correction factor for v_f:
Machining across grain = 0.8

Machine:
Stationary routers with/without CNC control, machining centres, milling machines with spindles to mount shank tools or portable routers.

Technical information:
Straight cut. Knife tip designed for seamless cut. Teflon coated tool body for reduced resin and glue build up. With tungsten carbide turnblade knife plunging edge.

HW, Z 1, inch types
WL 101 1

D in	NL in	GL in	S in	DRI	ID
5/8“	1 11/64“	3 5/8“	1/2“ x 1 3/8“	RH	**041084** ●

RPM: n = 16000 - 20000 min^{-1}

Spare knives:

BEZ	Knife	ABM mm	QAL	VE PCS	ID
Turnblade knife	Plunging tip	7,6x12x1,5	HW-05F	10	**005080** ●
Turnblade knife	Peripheral tip	30x12x1,5	HW-05F	10	**005161** ●

Spare parts:

BEZ	Knife	ABM mm	ID
Screw	Plunging tip	M3.5x4 (head D7)	**006068** ●
Screw	Peripheral tip	M3.5x4 (head D9)	**006226** ●
Torx® key		Torx® 15	**005457** ●





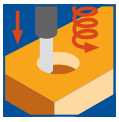

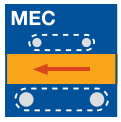



HW

Feed speed v_f depending on cutting depth a_p

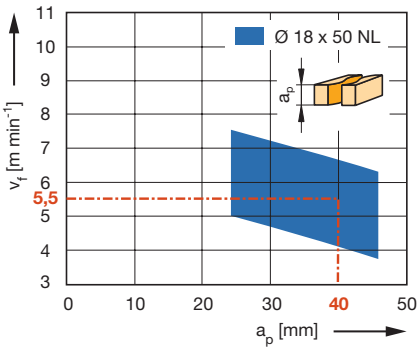

Workpiece material: Plastic coated chipboard
Operation: Sizing
Speed: n = 18000 min^{-1}
Correction factor for v_f: MDF = 0.8

Router cutter in turnblade design

Application:
Router cutter for sizing and grooving. For grooving with constant tool diameter.

Machine:
Stationary routers with/without CNC control, machining centres, milling machines with spindles to mount shank tools.

Workpiece material:
Softwood, chipboard and fibre materials (MDF, HDF etc.), uncoated, plastic coated, veneered etc.

Technical information:
Straight cut. Teflon coated tool body for reduced resin and glue build up. Limited suitable for finish cut. Cutting edge overlap visible on workpiece. With tungsten carbide turnblade knife plunging tip.

HW, Z 1+1, with staggered cutting edges
WL 101 2

D mm	GL mm	NL mm	S mm	DRI	ID
18	125	50	25x60	RH	**040925** ●
20	133	58	25x60	RH	**040928** ●

RPM: n = 16000 - 20000 min^{-1}

Spare knives:

BEZ	Knife	ABM mm	for D mm	QAL	VE PCS	ID
Turnblade knife	Plunging tip	7,6x12x1,5	16 - 18	HW-05F	10	**005080** ●
Turnblade knife	Plunging tip	9x12x1,5	20 - 24	HW-05F	10	**005158** ●
Turnblade knife	Peripheral tip	30x12x1,5		HW-05F	10	**005161** ●

Spare parts:

BEZ	Knife	ABM mm	for D mm	ID
Oval head screw Torx® 15	Plunging tip	M4x5	18 - 24	**007037** ●
Oval head screw Torx® 15	Peripheral tip	M4x5	18 - 24	**007038** ●
Torx® key		Torx® 15		**005457** ●

● available ex stock
□ available at short notice
Instruction manual visit www.leitz.org





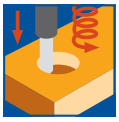

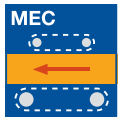



HW

Feed speed v_f depending on cutting depth a_p

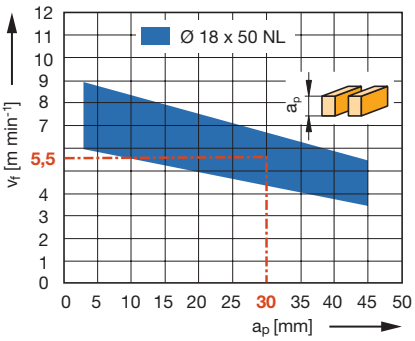

Workpiece material: Plastic coated chipboard
Operation: Sizing
Speed: n = 18000 min^{-1}
Correction factor for v_f: MDF = 0.8

Router cutter in turnblade design

Application:
Router cutter for sizing and grooving to finish quality. For grooving with constant tool diameter.

Machine:
Stationary routers with/without CNC control, machining centres, milling machines with spindles to mount shank tools.

Workpiece material:
Softwood, chipboard and fibre materials (MDF, HDF etc.), uncoated, plastic coated, veneered etc.

Technical information:
Straight cut. Teflon coated tool body for reduced resin and glue build up. Limited suitable for finish cut. Cutting edge overlap visible on workpiece. With tungsten carbide turnblade knife plunging tip.

HW, Z 1+1, with 50 mm/30 mm turnblade knives
WL 101 1

D mm	GL mm	NL mm	S mm	ID LH	ID RH
18	115	50	16x50		**040847** ●
18	115	50	20x50		**040848** ●
18	125	50	25x60	**040849** ●	**040850** ●

RPM: n = 16000 - 20000 min^{-1}

Spare knives:

BEZ	Knife	ABM mm	QAL	VE PCS	ID
Turnblade knife	Plunging tip	7,6x12x1,5	HW-05F	10	**005080** ●
Turnblade knife	Peripheral tip	30x12x1,5	HW-05F	10	**005161** ●
Turnblade knife	Peripheral tip	50x12x1,7	HW-05F	10	**007668** ●

Spare parts:

BEZ	Knife	ABM mm	ID
Oval head screw Torx® 15	Plunging tip	M4x5	**007037** ●
Oval head screw Torx® 15	Peripheral tip	M4x5	**007038** ●
Torx® key		Torx® 15	**005457** ●





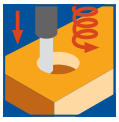

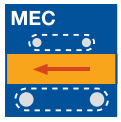





Feed speed v_f depending on grooving depth a_p
1 = Jointing cut a_e = 0.5 - 2 mm
2 = Sizing cut

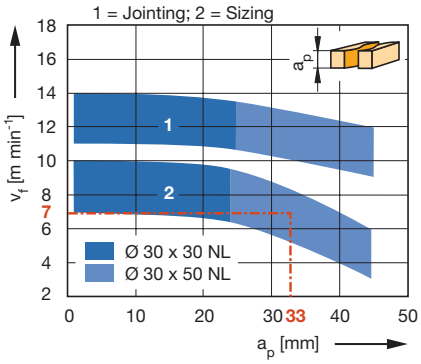

Workpiece material: Plastic coated chipboard
Operation: Jointing, sizing
Speed: n =18000 min^{-1}
Correction factor for v_f:
Machining across grain = 0.7; MDF = 0.8

Router cutter in turnblade design

Application:
Router cutter for sizing, grooving and finish cutting to finish quality. Z 2 for increased feed rates.

Machine:
Stationary routers with/without CNC control, machining centres, milling machines with spindles to mount shank tools.

Workpiece material:
Softwood and hardwood, chipboard and fibre materials (MDF, HDF etc.), uncoated, plastic coated, veneered etc., laminated veneer lumber (plywood, multiplex plywood etc.).

Technical information:
Straight cut. Knife tip designed for seamless cut. Design with plunging tip limited suitable for axial plunging. Suitable for machining the narrow edge of painted or foil coated MDF.

HW, Z 2
WL 101 2

D mm	GL mm	NL mm	S mm	ID LH	ID RH
25	125	50	25x60	**040857** ●	**040858** ●
30	105	30	25x60		**040854** ●
30	125	50	25x60		**040853** ●

RPM: n = 14000 - 20000 min^{-1}

Spare knives:

BEZ	Knife	ABM mm	for D mm	QAL	VE PCS	ID
Turnblade knife	Plunging tip	7,6x12x1,5	25	HW-05F	10	**005080** ●
Turnblade knife	Plunging tip	12x12x1.5	30	HW-05F	10	**005081** ●
Turnblade knife	Peripheral tip	30x12x1,5	30	HW-05F	10	**005161** ●
Turnblade knife	Peripheral tip	50x12x1,5	25/30	HW-05F	10	**006506** ●

Spare parts:

BEZ	Knife	ABM mm	for D mm	ID
Oval head screw Torx® 15	Plunging tip Peripheral tip	M4x5	25/30 25	**007037** ●
Oval head screw Torx® 15	Peripheral tip	M4x5	30	**007038** ●
Torx® key		Torx® 15		**005457** ●

● available ex stock
□ available at short notice
Instruction manual visit www.leitz.org







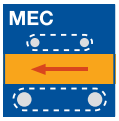





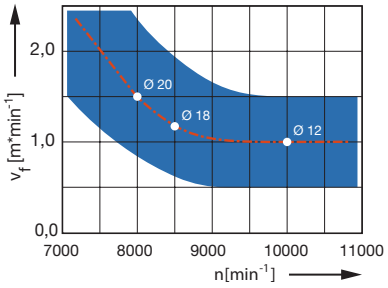

T-groove cutter

Application:
Router for slotting, grooving and undercutting

Machine:
Routing machines with/without CNC conrol. CNC machining centres, special milling machines with cutting spindles to adapt shank tools.

Workpiece material:
Aluminium, aluminium extruded profiles, thermoplastics

Technical information:
Long version for increased cross sections. When machining aluminum, carbide tools should be operated using cooling lubricants (emulsion or minimum quantity lubrication MQL).

Disc cutter HW-solid, Z 4
WO 110 1

D mm	GL mm	AL mm	S mm	Z	SB mm	Twist	DRI	ID
12	80	45	8	4	0,8	RD	RH	**745064** ●
18	80	45	8	4	0,8	RD	RH	**745065** ●
20	80	45	8	4	0,8	RD	RH	**745066** ●

RPM: n = 8000 - 10000 min^{-1} v_f = 1,0 m min^{-1}

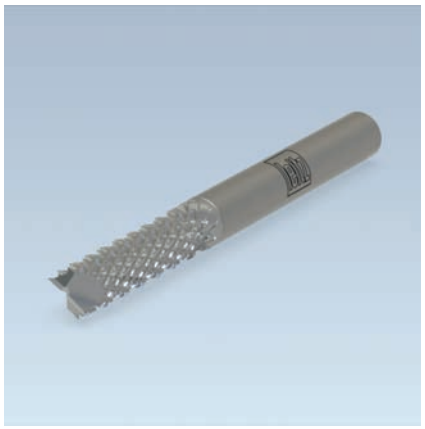

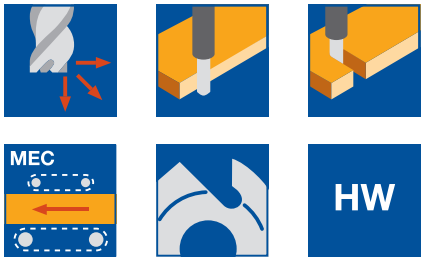

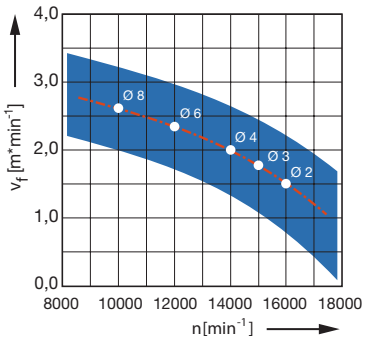

Grooving cutter, serrated

Application:
Routers for sizing, grooving and pocket milling.

Machine:
Routing machines with/without CNC conrol. CNC machining centres, special milling machines with cutting spindles to adapt shank tools.

Workpiece material:
Glass and carbon fiber materials or other fiber reinforced materials, PU hard foams.

Technical information:
Multi-teeth geometry for universal application, minimisation of the force influences on the components, this avoids delamination and breakouts.

HW solid, Z 2
WO 110 1

D mm	GL mm	NL mm	S mm	ID
3	40	12	6	**745022** ●
4	50	16	6	**745023** ●
6	60	19	6	**745024** ●
8	63	25	8	**745025** ●
2	60	6	6	**745026** ●

RPM: n = 10000 - 16000 min^{-1} v_f = 1,5 - 2,0 m min^{-1}

● available ex stock
□ available at short notice
Instruction manual visit www.leitz.org



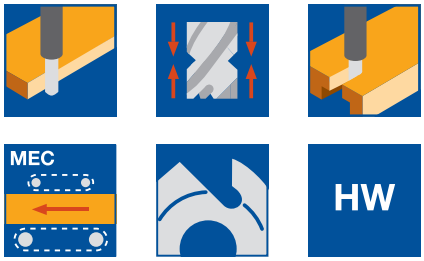

Grooving cutter, serrated

Application:
Router for sizing, slotting, splitting and delamination-free machining.

Machine:
Routing machines with/without CNC conrol. CNC machining centres, special milling machines with cutting spindles to adapt shank tools.

Workpiece material:
Carbon fiber materials with duroplastic binders (thickness 1,5 - 4 mm).

Technical information:
Special cutting edge geometry for delamination-free machining, no edge break-outs as well as high surface qualities due to alternating shear angle.

HW solid, Z2+2
WO 160 2 06

D	GL	NL	S	Z	DRI	ID
mm	mm	mm	mm			
4	60	14	6	2+2	RH	**745032** ●
6	60	15	6	2+2	RH	**745033** ●
8	63	16	8	2+2	RH	**745034** ●

RPM: n = 20000 - 24000 min^{-1} v_f = 2,0 - 3,0 m min^{-1}

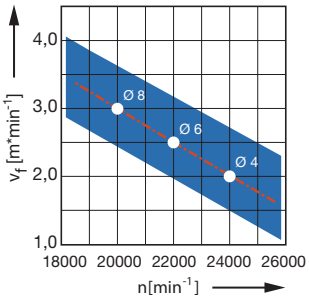




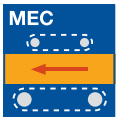



HW

Spiral roughing router cutter

Application:
Router cutter for sizing and grooving in roughing quality.

Machine:
Stationary routers with/without CNC control, machining centres, milling machines with spindles to mount shank tools.

Workpiece material:
Softwood and hardwood, laminated wood for window construction, chipboard and fibre working materials (MDF, HDF etc.), uncoated, laminated veneer lumber (plywood, multiplex plywood etc.).

Technical information:
Solid tungsten carbide with chipbreakers for good chip removal. Long design for large cutting depths (recommended in serveral steps).

Z 3, long design, shank 32 mm
WO 160 2

D mm	GL mm	NL mm	S mm	Z	Twist	DRI	ID
40	268	200	32x60	3	RD	RH	**240542** ●

RPM: n_{max} = 12000 min^{-1}

Z 3, long design, shank 20 mm
WO 160 2

D mm	GL mm	NL mm	S mm	Z	Twist	DRI	ID
20	155	90	20x65	3	RD	RH	**240543** ●

RPM: n_{max} = 24000 min^{-1}




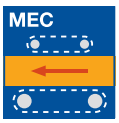



HW

Spiral roughing router cutter with extended gullet

Application:
Router cutter for sizing and grooving in roughing quality.

Machine:
Stationary routers with/without CNC control, machining centres, milling machines with spindles to mount shank tools.

Workpiece material:
Softwood and hardwood, laminated wood for window construction, chipboard and fibre working materials (MDF, HDF etc.), uncoated, laminated veneer lumber (plywood, multiplex plywood etc.).

Technical information:
Solid tungsten carbide with chipbreakers and extended gullet for good chip removal. Extra long design for large cutting depths (recommended in serveral steps).

Z 3, extra long design, shank 16 mm
WO 160 2

D mm	GL mm	NL mm	AL mm	S mm	Z	Twist	DRI	ID
25	180	25	110	16x70	3	RD	RH	**240544** ●

RPM: n_{max} = 18000 min^{-1}

● available ex stock
□ available at short notice
Instruction manual visit www.leitz.org





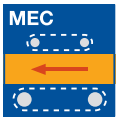





Feed speed v_f depending on cutting depth a_p

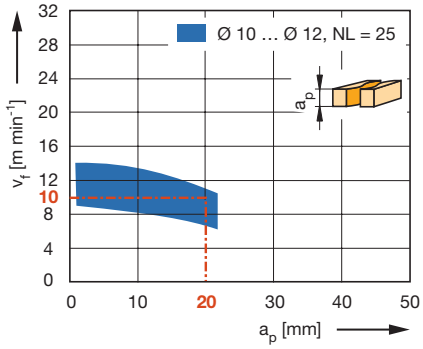

Workpiece material: Softwood
Operation: Sizing
Speed: n = 18000 min^{-1}
Correction factor for v_f:
Hardwood = 0.8; Chipboard = 1.3;
Glulam = 0.9

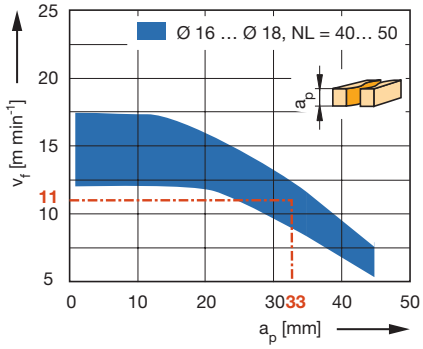

Workpiece material: Softwood
Operation: Sizing
Speed: n = 18000 min^{-1}
Correction factor for v_f:
Hardwood = 0.8; Chipboard = 1.2;
Glulam = 0.9

Spiral roughing/finishing router cutter Marathon

Application:
Router cutter for sizing and grooving in roughing/finishing quality.

Machine:
Stationary routers with/without CNC control, machining centres, milling machines with spindles to mount shank tools.

Workpiece material:
Softwood and hardwood, chipboard and fibre materials (MDF, HDF etc.), uncoated, laminated veneer lumber (plywood, multiplex plywood etc.), decorative laminates (HPL-compact laminate, Trespa etc.), duromers, plastomers, solid surface material (Corian, Varicor etc.).

Technical information:
Solid tungsten carbide. Tungsten carbide grade and Marathon coating for increased performance time, particularly in abrasive materials. Recommended for abrasive materials such as HPL/CPL.

HW, Z 2, short design
WO 160 2 15

D mm	D in	GL mm	GL in	NL mm	NL in	S mm	S in	Z	Twist	DRI	ID
12,7	1/2“	88,9	3 1/2“	38,1	1 1/2“	12,7x40	1/2“x1 1/2“	2	RD	RH	**240515** ●

HW, Z 2, short design, for abrasive materials
WO 160 2 15

D mm	GL mm	NL mm	S mm	Z	Twist	DRI	ID
10	70	25	10x40	2	RD	RH	**240200** ●
12	70	25	12x40	2	RD	RH	**240201** ●
16	100	40	16x50	2	RD	RH	**240202** ●

RPM: n_{max} = 24000 min^{-1}

● available ex stock
□ available at short notice
Instruction manual visit www.leitz.org





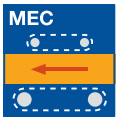





Feed speed v_f depending on cutting depth a_p

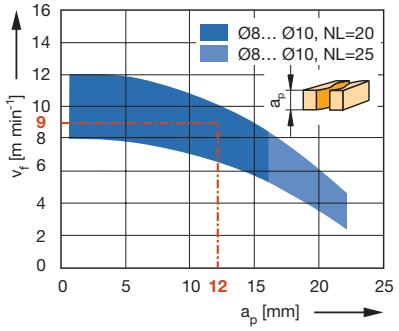

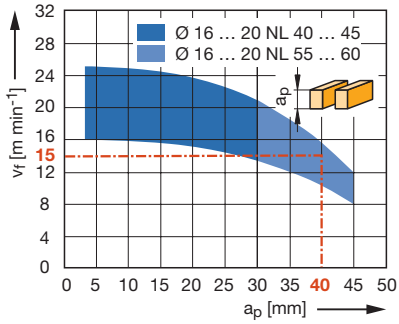

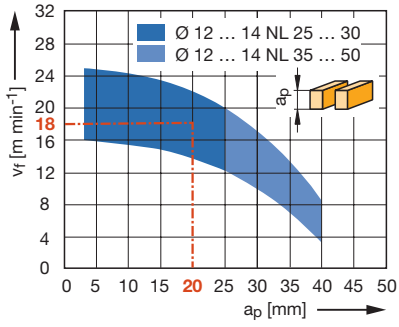

Spiral roughing/finishing router cutter Marathon

Application:
Router cutter for sizing and grooving in roughing/finishing quality.

Machine:
Stationary routers with/without CNC control, machining centres, milling machines with spindles to mount shank tools.

Workpiece material:
Softwood and hardwood, laminated wood for window construction, chipboard and fibre working materials (MDF, HDF etc.), uncoated, laminated veneer lumber (plywood, multiplex plywood etc.), plastomers, solid surface material (Corian, Varicor etc.), PVC window profiles.

Technical information:
Solid tungsten carbide. Marathon coating for increased performance time. Short design for increased stability. Long design for increased cutting depth (recommended in several steps). Higher feed speeds than conventional roughing cutters. Extremely smooth running.

Z 2 / Z 3, short design
WO 160 2 12

D mm	GL mm	NL mm	S mm	Z	Twist	ID LH	ID RH
8	65	20	8x40	2	RD		**042277** ●
10	70	25	10x40	2	RD		**042278** ●
10	70	25	10x40	2	LD		**042279** ●
12	70	25	12x40	3	RD		**042280** ●
12	70	25	12x40	3	LD		**042281** ●
14	80	30	14x45	3	RD		**042282** ●
16	100	40	16x55	3	RD		**042273** ●
16	100	40	16x55	3	LD	**042283** ●	**042284** ●
18	90	35	18x50	3	RD		**042285** ●
20	100	45	20x50	3	RD		**042286** ●
25	120	60	25x55	3	RD		**042287** ●

Z 2 / Z 3, long design
WO 160 2 12

D mm	GL mm	NL mm	S mm	Z	Twist	ID LH	ID RH
8	80	25	8x55	2	RD		**042288** ●
10	80	35	10x40	2	RD		**042298** ●
10	80	35	10x40	2	LD	**042299** ●	
12	80	35	12x40	3	RD		**042270** ●
12	80	35	12x40	3	LD	**042289** ●	**042290** ●
12	90	42	12x40	3	RD		**042271** ●
14	110	50	14x55	3	RD		**042272** ●
14	110	50	14x55	3	LD		**042291** ●
16	110	55	16x55	3	RD		**042274** ●
16	110	55	16x55	3	LD	**042292** ●	**042293** ●
18	120	60	18x55	3	RD		**042294** ●
20	120	60	20x55	3	RD		**042275** ●
20	120	60	20x55	3	LD	**042295** ●	**042296** ●
20	130	75	20x50	3	RD		**042276** ●
20	130	75	20x50	3	LD	**042297** ●	

RPM:
Wood/wood derived material: n = 16000 - 24000 min^{-1}
Plastics: n = 12000 - 18000 min^{-1}
n_{max} = 24000 min^{-1}

Workpiece material: Softwood
Operation: Sizing
RPM: n = 18000 min^{-1}
Correction factor for v_f:
Hardwood = 0.8; Chipboard = 1.3; Glulam = 0.9

● available ex stock
□ available at short notice
Instruction manual visit www.leitz.org





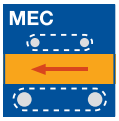





Feed speed v_f depending on cutting depth a_p

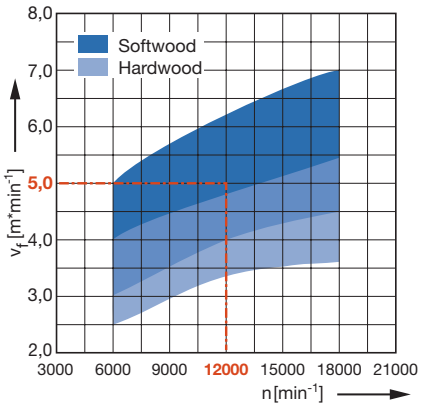

Workpiece material: Softwood
Operation: Sizing
Axial infeed: a_p = 20 - 50 mm
Correction factor for v_f:
Hardwood = 0.7; Glulam = 0.8

Spiral roughing/finishing router cutter Marathon

Application:
Router cutter for sizing and grooving in roughing/finishing quality.

Machine:
Stationary routers with/without CNC control, machining centres, joinery machines, milling machines with spindles to mount shank tools.

Workpiece material:
Softwood and hardwood, glulam, glue-laminated timber and laminated wood.

Technical information:
Solid tungsten carbide. Marathon coating for increased performance times. Long design for large cutting depths. Higher feed rates with conventional roughing cutters possible. Extremely smooth running.

Z 3, long design, shank 30 mm
WO 160 2 12

D	GL	NL	S	Z	Twist	DRI	ID
mm	mm	mm	mm				
30	195	120	30x53	3	RD	RH	**240305** ●
40	195	120	30x53	3	RD	RH	**240306** ●
40	235	160	30x53	3	RD	RH	**240307** ●

Note:
Tool shank S30x53 with recess suitable for many conventional joinery machines.
Not suitable for use in shrink-fit chucks.
On machines with automatic tool changer use collet chuck ER 40 together with collet d = 30 mm, ID **679039**.

Z 3, long design, shank 32 mm
WO 160 2 12

D	GL	NL	S	Z	Twist	DRI	ID
mm	mm	mm	mm				
30	195	120	32x65	3	RD	RH	**240308** ●
40	195	120	32x65	3	RD	RH	**240309** ●
40	235	160	32x65	3	RD	RH	**240310** ●

RPM: n = 6000 - 18000 min^{-1}





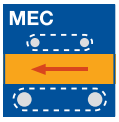





Application example for mortise slot production

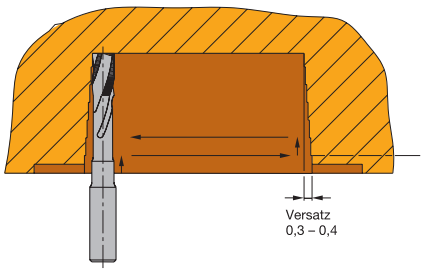

Application data:
Infeed at:
a_p 4 - 8 mm per stroke in solid wood;
v_f 10 - 16 m min^{-1};
n = 12000 - 18000 min^{-1}

a_p 8 - 15 mm per stroke in chipboard;
v_f 12 - 18 m min^{-1};
n = 12000 - 18000 min^{-1}

Spiral roughing/finishing router cutter Marathon

Application:
Router cutter for sizing, grooving and mortise slots in roughing/finishing quality.

Machine:
Stationary routers with/without CNC control, machining centres, milling machines with spindles to mount shank tools.

Workpiece material:
Softwood and hardwood, modified timber for window construction, chipboard and fibre working materials (MDF, HDF etc.) uncoated, laminated veneer lumber (plywood, multiplex plywood etc.), PVC window profiles.

Technical information:
Solid tungsten carbide. Marathon coating for increased performance time. Extra long design for increased cutting depth (in several steps). Higher feed speeds than conventional spiral roughing cutters, extremely smooth running.

Z 2 / Z 3, extra long design, for mortise slots
WO 160 2 13

D mm	GL mm	NL mm	AL mm	S mm		Z	Twist	DRI	ID	ID Set HSK-F 63
8	80	25	51	8x25		2	LD	RH	**240010** ●	**240500** □
10	90	30	51	10x35		2	LD	RH	**240011** ●	**240501** □
12	120	35	80	12x35		3	LD	RH	**240012** ●	**240502** □
12	120	35	80	12x35		3	RD	RH	**240000** ●	
14	170	30	95	16x50		3	RD	RH	**240001** ●	
14	190	30	120	16x50		3	RD	RH	**240002** ●	
16	170	50	105	16x50		3	RD	RH	**240003** ●	
16	179	30	120	16x58	*	3	RD	RH	**240004** ●	
16	179	30	120	16x58		3	RD	RH	**240013** ●	
16	179	30	120	20x58	*	3	RD	RH	**240005** ●	
16	179	30	120	20x58		3	RD	RH	**240014** ●	
16	205	30	135	20x50		3	RD	RH	**240006** ●	
17	190	30	120	20x50		3	RD	RH	**240008** ●	
18	170	50	115	20x50		3	RD	RH	**240009** ●	

RPM: Wood/wood derived material: D 10-12 mm: n = 18000 - 24000 min^{-1}
Wood/wood derived materials: D 14-18 mm: n = 12000 - 20000 min^{-1}
Plastics: n = 12000 - 18000 min^{-1}

* with clamping flat for HOMAG/WEEKE lock case trimming unit.

Note:
Set HSK-F 63 = tools marked with the note „Set HSK-F 63“ will be supplied mounted in shrink-fit chuck HSK-F 63.

● available ex stock
□ available at short notice
Instruction manual visit www.leitz.org

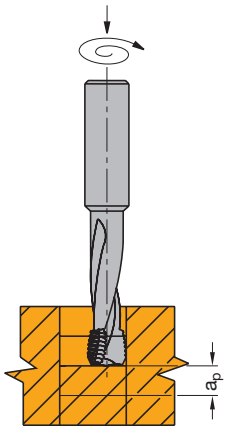

Production of keyholes and spyholes by circular cutting

Application data:
a_p 4 - 8 mm per stroke in solid wood;
v_f 10 - 16 m min^{-1};
n = 12000 - 18000 min

a_p 8 - 15 mm per stroke in chipboard;
v_f 12 - 18 m min^{-1};
n = 12000 - 18000 min^{-1}

Application:
Router cutter for sizing and cutting spyholes and keyholes in roughing/finishing quality.

Workpiece material:
Softwood and hardwood, modified timber for window construction, chipboard and fibre working materials (MDF, HDF etc.) uncoated, laminated veneer lumber (plywood, multiplex plywood etc.).

Z 3, extra long design for cutting spyholes and keyholes
WO 160 2 14

D mm	GL mm	NL mm	AL mm	S mm	Z	DRI	ID	ID Set HSK-F 63
10	95	45		10x40	3	RH	**240100** ●	
12	120	15	75	12x40	2	RH	**240102** ●	
12	140	20	95	12x40	2	RH	**240103** ●	
14	130	50	75	14x50	3	RH	**240104** ●	
14	170	30	95	16x60	3	RH	**240108** ●	**240601** □
16	130	75		16x50	3	RH	**240105** ●	
16	170	50	105	16x55	3	RH	**240107** ●	**240600** □
16	170	30	95	16x60	3	RH	**240106** ●	
25	200	120		25x65	3	RH	**240300** ●	**240800** □

RPM: D 10-12 mm: n = 18000 - 24000 min^{-1}
D 14-18 mm: n = 12000 - 20000 min^{-1}

Note:
Set HSK-F 63 = tools marked with the note „Set HSK-F 63“ will be supplied mounted in shrink-fit chuck HSK-F 63.





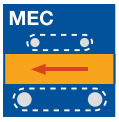





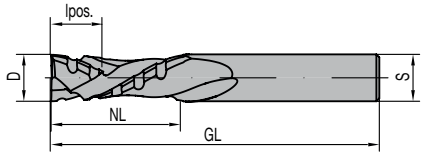

Feed speed v_f depending on cutting depth a_p

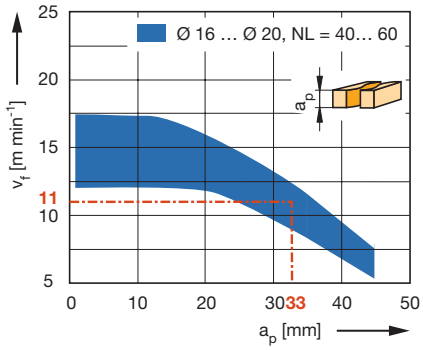

Workpiece material: Softwood
Operation: Sizing
Speed: n = 18000 min^{-1}
Correction factor for v_f:
Hardwood = 0.8; Chipboard = 1.2;
Glulam = 0.9

Spiral roughing/finishing router cutter Marathon alternate twist

Application:
Routers for sizing and grooving in roughing/finishing quality and tear-free cutting edges on both sides.

Machine:
Stationary routers with/without CNC control, machining centres, milling machines with spindles to mount shank tools.

Workpiece material:
Softwood and hardwood, chipboard and fibre materials (MDF, HDF etc.), uncoated, laminated veneer lumber (plywood, multiplex plywood etc.), plastomers, solid surface material (Corian, Varicor etc.).

Technical information:
Solid tungsten carbide. Marathon coating for increased performance time. Alternate twist for tear-free cut edges on both sides. Higher feed speeds possible than with conventional roughing cutters. Extremely smooth running.

Z 2+2
WO 160 2 16

D mm	GL mm	NL mm	lpos. mm	S mm	$a_{p\ min}$ mm	DRI	ID
16	100	40	14,0	16x50	15	RH	**240402** ●
16	110	55	14,0	16x50	15	RH	**240408** ●
20	120	45	17,5	20x50	19	RH	**240400** ●
20	140	75	17,5	20x50	19	RH	**240403** ●

Z 2+2, Nesting types
WO 160 2 16

D mm	D in	GL mm	GL in	NL mm	NL in	lpos. mm	S mm	S in	$a_{p\ min}$ mm	DRI	ID
12		80		25		5,0	12x40		6	RH	**240404** ●
12		90		35		12,0	12x40		13	RH	**240405** ●
12,7	1/2“	76,2	3“	25	1“	5,0	12,7x40	1/2“x1 1/2“	6	RH	**240406** ●
12,7	1/2“	88,9	3 1/2“	35	1 3/8“	14,0	12,7x40	1/2“x1 1/2“	15	RH	**240407** ●

RPM: n_{max} = 24000 min^{-1}

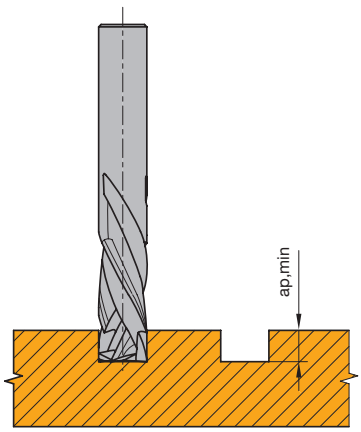

Minimum grooving depth $a_{p\ min}$ for tear-free cut

● available ex stock
□ available at short notice
Instruction manual visit www.leitz.org





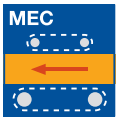



HW

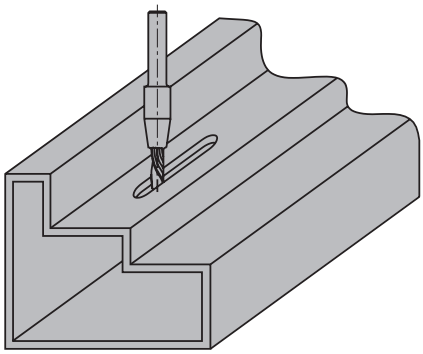

Slotting extrusions

Spiral finishing router cutter

Application:
Router for grooving plastic and aluminium profile extrusions. Especially to produce drainage grooves in plastic window profiles.

Machine:
Stationary routers with/without CNC control, machining centres, milling machines with spindles to mount shank tools.

Workpiece material:
Softwood and hardwood, duromers, plastomers, sandwich panels (PU foam cores with aluminium cover etc.), NF-metals (aluminium, copper etc.).

Technical information:
When machining aluminum, carbide tools should be operated using cooling lubricants (emulsion or minimum quantity lubrication MQL).

HW solid, Z 1, extended version
WO 160 2 07

D mm	GL mm	NL mm	AL mm	S mm	Z	Twist	DRI	ID
5	78	20	30	8x40	1	RD	RH	**042539** ●
5	95	20	30	8x40	1	RD	RH	**042540** ●
5	110	25	45	8x40	1	RD	RH	**042541** ●

RPM: n = 18000 - 24000 min^{-1}





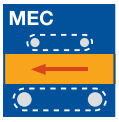



HW

Spiral finishing router cutter

Application:
Router cutter for sizing, grooving and finish cutting. For high demands on finish quality.

Machine:
Stationary routers with/without CNC control, machining centres, milling machines with spindles to mount shank tools.

Workpiece material:
Softwood and hardwood, chipboard and fibre materials (MDF, HDF etc.), uncoated, plastic coated, veneered etc., laminated veneer lumber (plywood, multiplex plywood etc.), duromers, plastomers, solid surface material (Corian, Varicor etc.), decorative laminates (HPL-compact laminate, Trespa etc.), NF-metals (aluminium, copper etc.).

Technical information:
Large twist angle for high shear cut. Check twist direction for good top layer cut quality. Maximum cutting depth 1.0 - 1.5 x D. Short design for increased stability and reduced vibration. Long design for increased cutting depth (recommended in several steps). When machining aluminum, carbide tools should be operated using cooling lubricants (emulsion or minimum quantity lubrication MQL).

HW solid, Z 1, short design
WO 160 2 03

D mm	D in	GL mm	GL in	NL mm	NL in	S mm	S in	Z	Twist	DRI	ID
3		50		6		6x30		1	RD	RH	**042723** ●
3		50		6		6x30		1	LD	RH	**042724** ●
4		50		8		6x30		1	RD	RH	**042725** ●
4		50		8		6x30		1	LD	RH	**042726** ●
5		50		10		6x30		1	RD	RH	**042727** ●
5		50		10		6x30		1	LD	RH	**042728** ●
6		50		14		6x30		1	RD	RH	**042729** ●
6		50		14		6x30		1	LD	RH	**042730** ●
6,35	1/4“	50,8	2“	15,88	5/8“	6,35x30	1/4“x1 1/8“	1	RD	RH	**240512** ●
8		65		20		8x40		1	RD	RH	**042731** ●
8		65		20		8x40		1	LD	RH	**042732** ●
10		70		20		10x40		1	RD	RH	**042733** ●

Feed speed v_f depending on cutting depth a_p

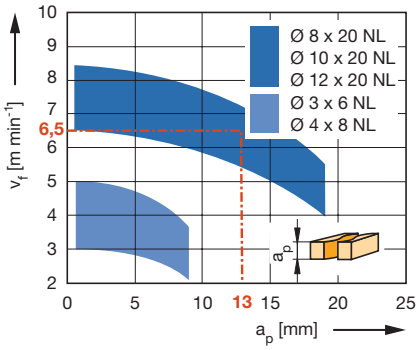

Workpiece material: Softwood
Operation: Sizing
Speed: n = 18000 - 24000 min^{-1}
Correction factor for v_f:
Hardwood = 0.9; Machining across grain = 0.8; Chipboard = 1.1

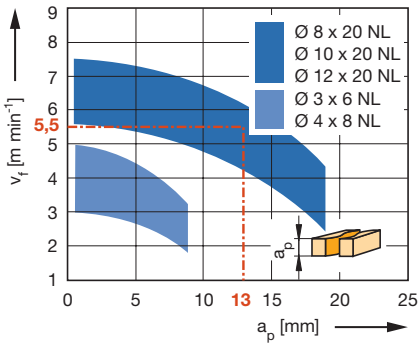

HW solid, Z 1, long design
WO 160 2 03

D mm	GL mm	NL mm	S mm	Z	Twist	DRI	ID
4	60	12	6x40	1	RD	RH	**042739** ●
4	60	12	6x40	1	LD	RH	**042740** ●
5	80	18	6x40	1	RD	RH	**042741** ●
5	80	18	6x40	1	LD	RH	**042742** ●
6	80	22	6x40	1	RD	RH	**042743** ●
6	80	22	6x40	1	LD	RH	**042744** ●
8	80	25	8x40	1	RD	RH	**042745** ●
8	80	25	8x40	1	LD	RH	**042746** ●
10	90	32	10x40	1	RD	RH	**042747** ●
10	90	32	10x40	1	LD	RH	**042748** ●
12	90	32	12x40	1	RD	RH	**042749** ●

RPM: Wood/wood derived material: n = 16000 - 24000 min^{-1}
Plastics: n = 12000 - 18000 min^{-1}

Workpiece material: Duromers, plastomers, glulam (HPL), compound materials
Operation: Sizing
Speed: n = 16000 - 18000 min^{-1}

● available ex stock
□ available at short notice
Instruction manual visit www.leitz.org





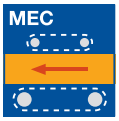



HW

Feed speed v_f depending on cutting depth a_p

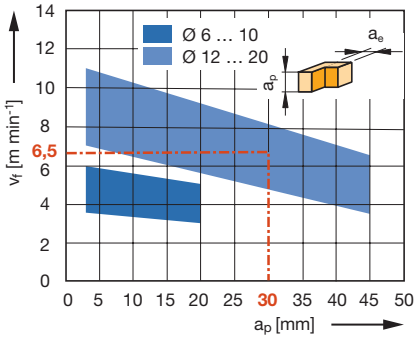

Workpiece material: Softwood
Operation: Jointing
Speed: n = 18000 min^{-1}
Correction factor for v_f:
Hardwood = 0.9; Machining across grain = 0.7

Spiral finishing router cutter

Application:
Router cutter for sizing, grooving and finish cutting. For high demands on finish quality.

Machine:
Stationary routers with/without CNC control, machining centres, milling machines with spindles to mount shank tools.

Workpiece material:
Softwood and hardwood, chipboard and fibre materials (MDF, HDF etc.), uncoated, plastic coated, veneered etc., laminated veneer lumber (plywood, multiplex plywood etc.), duromers, plastomers, solid surface material (Corian, Varicor etc.), decorative laminates (HPL-compact laminate, Trespa etc.).

Technical information:
Ideally used after roughing cutters, finish cut allowance approx. 1-2 mm. Check twist direction for good top layer quality. Short design for increased stability and reduced vibration. Long design for larger material thickness at reduced feed speeds.

HW solid, Z 2, short design
WO 160 2 05

D mm	GL mm	NL mm	S mm	Z	Twist	DRI	ID
6	60	12	6x30	2	LD	RH	**042457** ●
8	65	20	8x30	2	RD	RH	**042472** ●
10	70	25	10x40	2	RD	RH	**042458** ●
10	70	25	10x40	2	LD	RH	**042459** ●
12	70	25	12x40	2	RD	RH	**042758** ●
12	70	25	12x40	2	LD	RH	**042760** ●
16	100	40	16x50	2	RD	RH	**042761** ●
16	100	40	16x50	2	LD	RH	**042763** ●

HW solid, Z 2, long design
WO 160 2 05

D mm	D in	GL mm	GL in	NL mm	NL in	S mm	S in	Z	Twist	DRI	ID
12		80		35		12x40		2	RD	RH	**042765** ●
12,7	1/2“	76,2	3“	31,8	1 1/4“	12,7x40	1/2“x1 1/2“	2	LD	RH	**240510** ●
12,7	1/2“	88,9	3 1/2“	31,8	1 1/4“	12,7x40	1/2“x1 1/2“	2	LD	RH	**240511** ●

RPM: n = 16000 - 24000 min^{-1}




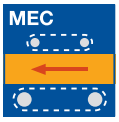



HW

Feed speed v_f depending on cutting depth a_p

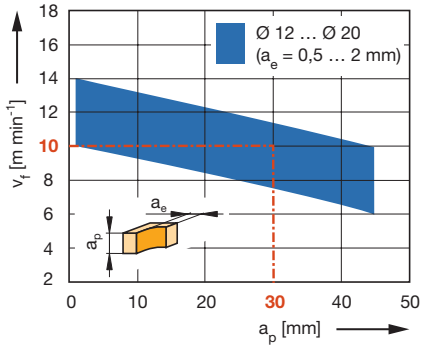

Workpiece material: Softwood
Operation: Jointing
Speed: n = 18000 min^{-1}
Correction factor for v_f: Hardwood = 0.9; Machining across grain = 0.7

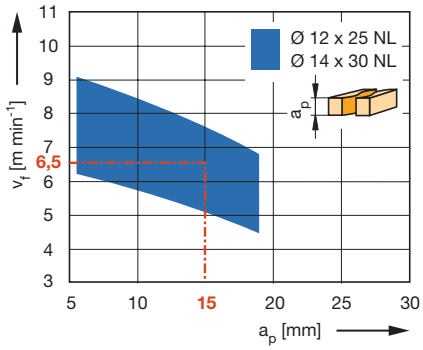

Workpiece material: Duromers, laminated materials (HPL, CPL)
Operation: Sizing
Speed: n = 14000 - 18000 min^{-1}

Spiral finishing router cutter

Application:
Router cutter for sizing, grooving and finish cutting. For high demands on finish quality. Z 3 design for high feed speeds.

Machine:
Stationary routers with/without CNC control, machining centres, milling machines with spindles to mount shank tools.

Workpiece material:
Softwood and hardwood, chipboard and fibre materials (MDF, HDF etc.), uncoated, plastic coated, veneered etc., laminated veneer lumber (plywood, multiplex plywood etc.), duromers, plastomers, solid surface material (Corian, Varicor etc.), decorative laminates (HPL-compact laminate, Trespa etc.).

Technical information:
Ideally used after roughing cutters, finish cut allowance approx. 1-2 mm. Check twist direction for good top layer quality. Short design for increased stability and reduced vibration. Long design for larger material thickness at reduced feed speeds.

HW solid, Z 3, short design
WO 160 2 05

D mm	GL mm	NL mm	S mm	Z	Twist	ID LH	ID RH
12	70	25	12x40	3	LD		**042486** ●
12	70	25	12x40	3	RD	**042534** ●	**042487** ●
16	100	40	16x50	3	RD		**042488** ●
16	100	40	16x50	3	LD		**042489** ●

HW solid, Z 3, long design
WO 160 2 05

D mm	GL mm	NL mm	S mm	Z	Twist	ID LH	ID RH
8	65	25	8x30	3	LD		**042490** ●
12	80	35	12x40	3	RD		**042460** ●
14	110	50	14x55	3	RD		**042462** ●
16	110	55	16x55	3	RD		**042464** ●
16	110	55	16x55	3	LD	**042473** ●	**042465** ●
20	120	60	20x55	3	RD		**042466** ●
20	120	60	20x55	3	LD	**042468** ●	**042467** ●
20	130	75	20x50	3	RD		**042549** ●

RPM: n = 16000 - 24000 min^{-1}

● available ex stock
□ available at short notice
Instruction manual visit www.leitz.org

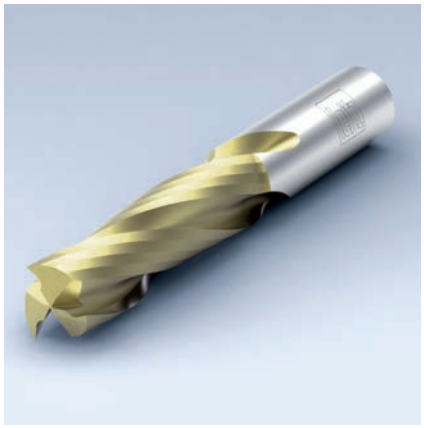



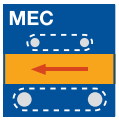





Feed speed v_f depending on cutting depth a_p

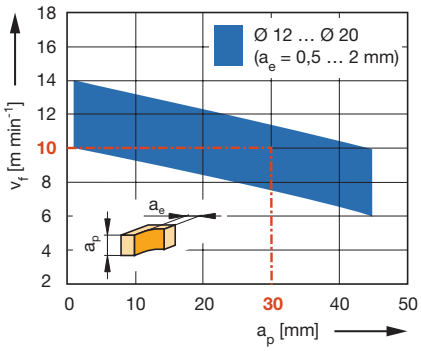

Workpiece material: Softwood
Operation: Jointing
Speed: n = 18000 min^{-1}
Correction factor for v_f:
Hardwood = 0.9; Machining across grain = 0.7

Spiral finishing router cutter Marathon

Application:
Router cutter for sizing, grooving and finish cutting. For high demands on finish quality. Z 3 design for high feed speeds.

Machine:
Stationary routers with/without CNC control, machining centres, milling machines with spindles to mount shank tools.

Workpiece material:
Softwood and hardwood, chipboard and fibre materials (MDF, HDF etc.), uncoated, plastic coated, veneered etc., laminated veneer lumber (plywood, multiplex plywood etc.), duromers, plastomers, solid surface material (Corian, Varicor etc.), decorative laminates (HPL-compact laminate, Trespa etc.).

Technical information:
Marathon coating for increased performance time and reduced resin build up. Ideally used after roughing cutters, finish cut allowance approx. 1-2 mm. Mirror finished cutting area ideal for machining thermoplastics.

HW solid, Z 3
WO 160 2 10

D mm	GL mm	NL mm	S mm	Z	Twist	DRI	ID
12	80	35	12x40	3	RD	RH	**042790** ●
14	110	50	14x55	3	RD	RH	**042791** ●
16	110	55	16x55	3	RD	RH	**042792** ●
20	120	60	20x55	3	RD	RH	**042793** ●
20	130	75	20x50	3	RD	RH	**042794** ●

RPM: n = 16000 - 24000 min^{-1}





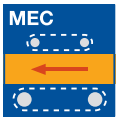



HW

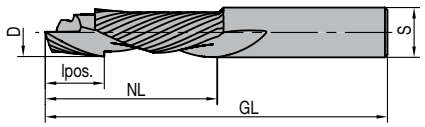

Feed speed v_f depending on cutting depth a_p

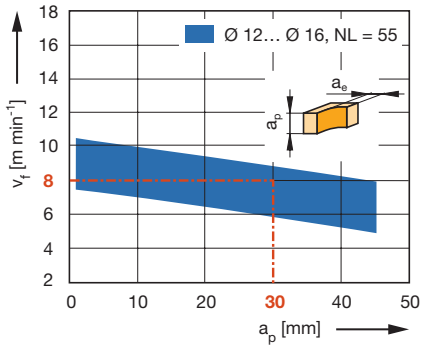

Workpiece material: Softwood
Operation: Jointing
Speed: n = 18000 min^{-1}
Correction factor for v_f:
Hardwood = 0.9; Machining across grain = 0.7

Spiral finishing router cutter alternate twist angle

Application:
Router cutter for sizing, grooving and finish cutting. For high demands on finish quality and tear-free cut edges on both sides.

Machine:
Stationary routers with/without CNC control, machining centres, milling machines with spindles to mount shank tools.

Workpiece material:
Softwood and hardwood, chipboard and fibre materials (MDF, HDF etc.), uncoated, plastic coated, veneered etc., laminated veneer lumber (plywood, multiplex plywood etc.), duromers, plastomers, solid surface material (Corian, Varicor etc.), decorative laminates (HPL-compact laminate, Trespa etc.).

Technical information:
Ideally used after roughing cutters, finish cut allowance approx. 1-2 mm. Alternate twist for tear-free cut edges on both sides. Z 1+1 design, suited for solid wood up to 50 mm thickness with roughing cut or 30 mm thickness without roughing cut.

HW solid, Z 1+1
WO 160 2 06

D mm	GL mm	NL mm	lpos. mm	S mm	$a_{p\ min}$ mm	DRI	ID
10	70	25	11,0	10x40	12	RH	**042511** ●
12	80	35	15,0	12x40	16	RH	**042509** ●
16	110	55	19,0	16x50	20	RH	**042543** ●

RPM: n = 16000 - 20000 min^{-1}

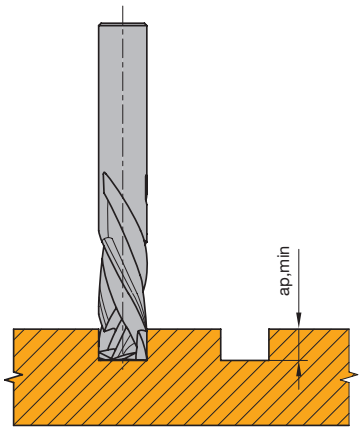

Minimum grooving depth $a_{p\ min}$ for tear-free cut

● available ex stock
□ available at short notice
Instruction manual visit www.leitz.org





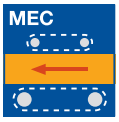



HW

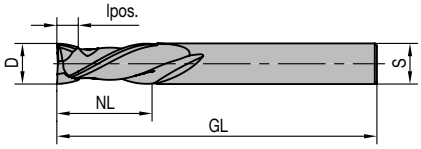

Feed speed v_f depending on cutting depth a_p

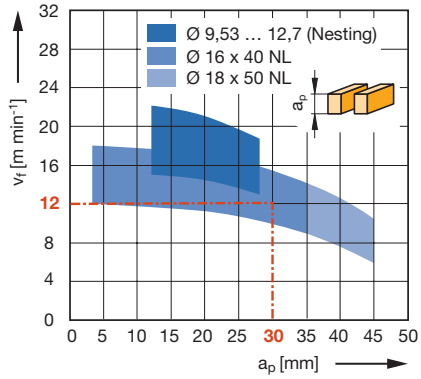

Workpiece material: Plastic coated and veneered chipboard
Operation: Sizing
Speed: n = 18000 min^{-1}
Correction factor v_f: MDF = 0.8; Machining across grain = 0.7

Spiral finishing router cutter alternate twist angle

Application:
Router cutter for sizing, grooving and finish cutting. For high demands on finish quality and tear-free cut edges on both sides.

Machine:
Stationary routers with/without CNC control, machining centres, milling machines with spindles to mount shank tools.

Workpiece material:
Softwood and hardwood, chipboard and fibre materials (MDF, HDF etc.), uncoated, plastic coated, veneered etc., laminated veneer lumber (plywood, multiplex plywood etc.), duromers, plastomers, solid surface material (Corian, Varicor etc.), decorative laminates (HPL-compact laminate, Trespa etc.).

Technical information:
Ideally used after roughing cutters, finish cut allowance approx. 1-2 mm. Alternate twist for tear-free cut edges on both sides. Design for coated chipboard material and fibre material, glulam, abrasive materials and compound materials with aluminium top layer.

HW solid, Z 2+2, for abrasive materials
WO 160 2 06

D mm	D in	GL mm	GL in	NL mm	NL in	lpos. mm	S mm	S in	$a_{p\,min}$ mm	DRI	ID
12		70		25		12,0	12x40		13	RH	**042536** ●
16		100		40		14,0	16x50		15	RH	**042537** ●
18		100		50		19,0	18x50		20	RH	**042538** ●
9,53	3/8“	76,2	3“	28,6	1 1/8“	6,0	9,53x40	3/8“x1 1/2“	7	RH	**240516** ●
12,7	1/2“	88,7	3 1/2“	38,1	1 1/2“	12,0	12,7x40	1/2“x1 1/2“	13	RH	**240517** ●

RPM: n = 16000 - 24000 min^{-1}

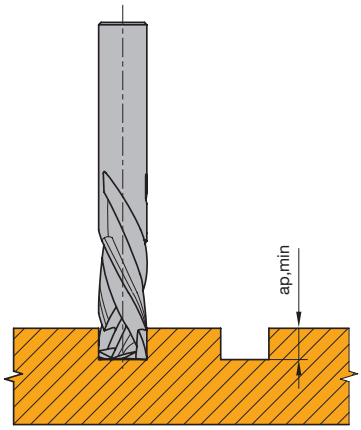

Minimum grooving depth $a_{p\,min}$ for tear-free cut





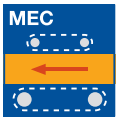



HW

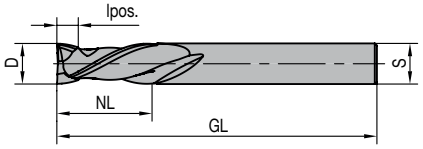

Feed speed v_f depending on cutting depth a_p

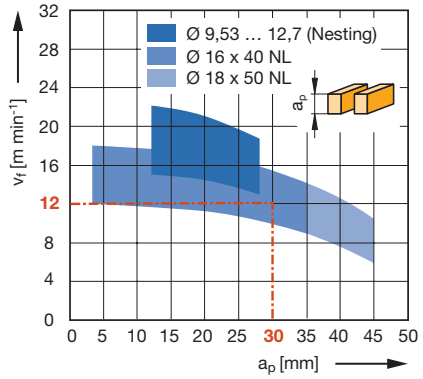

Workpiece material: Plastic coated and veneered chipboard
Operation: Sizing
Speed: n = 18000 min^{-1}
Correction factor v_f: MDF = 0.8; Machining across grain = 0.7

Spiral finishing router cutter alternate twist angle

Application:
Router cutter for sizing, grooving and finish cutting. For high demands on finish quality and tear-free cut edges on both sides.

Machine:
Stationary routers with/without CNC control, machining centres, milling machines with spindles to mount shank tools.

Workpiece material:
Softwood and hardwood, chipboard and fibre materials (MDF, HDF etc.), uncoated, plastic coated, veneered etc., laminated veneer lumber (plywood, multiplex plywood etc.), duromers, plastomers, solid surface material (Corian, Varicor etc.), decorative laminates (HPL-compact laminate, Trespa etc.).

Technical information:
Alternate twist for tear-free cutting edges on both sides. Especially suitable to cut coated chip and fibre boards, glulam, abrasive materials as well as composite materials with aluminium top layer.

HW solid, Z 2+2, Nesting types
WO 160 2 06

D mm	D in	GL mm	GL in	NL mm	NL in	lpos. mm	S mm	S in	$a_{p\ min}$ mm	DRI	ID
9,53	3/8“	76,2	3“	23	7/8“	4,5	9,53x40	3/8“x1 1/2“	5,5	RH	**240518** ●
9,53	3/8“	76,2	3“	28,6	1 1/8“	6,5	9,53x40	3/8“x1 1/2“	7	RH	**240503** ●
10		75		28		7,5	10x40		8	RH	**240530** ●
12,7	1/2“	76,2	3“	32	1 1/4“	4,5	12,7x40	1/2“x1 1/2“	5	RH	**240504** ●
12,7	1/2“	76,2	3“	32	1 1/4“	5,0	12,7x40	1/2“x1 1/2“	6	RH	**240505** ●
12,7	1/2“	88,9	3 1/2“	34,9	1 3/8“	5,0	12,7x40	1/2“x1 1/2“	6	RH	**240506** ●
12,7	1/2“	101,6	4“	43	1 5/8“	19,0	12,7x40	3/8“x1 5/8“	20	RH	**240507** ●

HW solid, Z 3+3, Nesting types
WO 160 2 06

D mm	D in	GL mm	GL in	NL mm	NL in	lpos. mm	S mm	S in	$a_{p\ min}$ mm	DRI	ID
9,53	3/8“	76,2	3“	23	7/8“	4,5	9,53x40	3/8“x1 1/2“	6	RH	**240508** ●
10		70		24		7,0	10x40		8	RH	**042797** ●

RPM: n = 16000 - 24000 min^{-1}

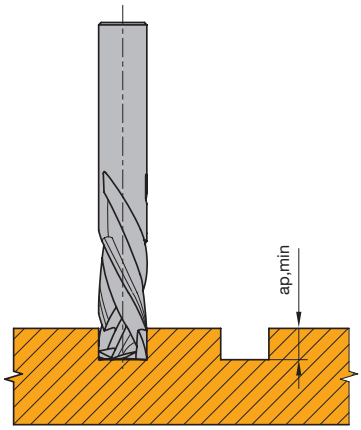

Minimum grooving depth $a_{p\ min}$ for tear-free cut

● available ex stock
□ available at short notice
Instruction manual visit www.leitz.org





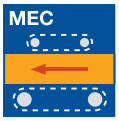





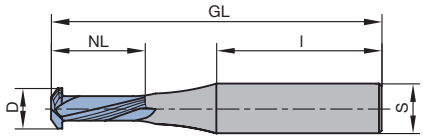

Recommendation for application:
RPM:
n = 18000 - 24000 min^{-1}
Feed rate:
v_f = 6 - 8 m min^{-1} chipboard/ MDF
v_f = 4 - 6 m min^{-1} solid wood/plywood

Grooving cutter Lamello® Clamex® P-System®

Application:
Router cutter for machining a profile slot for Lamello® Clamex® P-System® connectors.

Machine:
Stationary routers with CNC control, machining centres, especially machines with 5 axes technology or with comparable aggregates to swivel cutting tools.

Workpiece material:
Chipboard and fibre materials (MDF, HDF etc.), uncoated, plastic coated, veneered etc., softwood and hardwood, glued wood and laminated veneer lumber (plywood, multiplex plywood etc.).

Technical information:
Solid tungsten carbide. Marathon-TDC coating for increased performance times. Alternate twist for tear-free cutting edges.

Z 2+2
WO 531 2

D mm	GL mm	NL mm	S mm	DRI	ID
9,8	80	23	12x40	RH	**039161** ●

RPM: n_{max} = 24000 min^{-1}

Boring bit for boring an access hole D = 6 mm: ID **034116.**
Grooving cutter for CNC: ID **192391**.



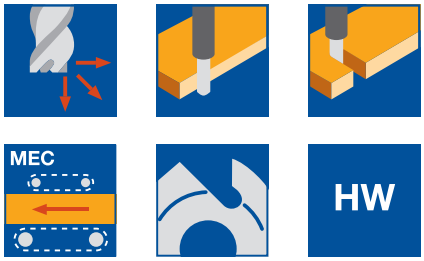

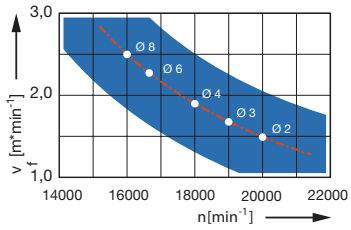

Spiral finishing router cutter

Application:
Router for sizing, grooving, sloting, splitting and axial plunging.

Machine:
Routing machines with/without CNC conrol. CNC machining centres, special milling machines with cutting spindles to adapt shank tools.

Workpiece material:
Aluminium, aluminium extruded profiles, aluminium composite panels.

Technical information:
Special cutting geometry for high finish quality and burr-free cutting edges. Short processing times with long tool life. When machining aluminum, carbide tools should be operated using cooling lubricants (emulsion or minimum quantity lubrication MQL).

HW solid, Z 1, polished cutting groove, axial plunging
WO 160 2 03

D mm	GL mm	NL mm	S mm	Z	ER mm	Twist	DRI	ID
2	50	6	6	1	0,1	RD	RH	**745067** ●
3	50	8	6	1	0,1	RD	RH	**745068** ●
4	50	5	6	1	0,1	RD	RH	**745069** ●
6	60	12	6	1	0,1	RD	RH	**745070** ●
8	63	20	8	1	0,1	RD	RH	**745071** ●

RPM: n = 16000 - 22000 min^{-1} v_f = 2,0 - 2,5 m min^{-1}

● available ex stock
□ available at short notice
Instruction manual visit www.leitz.org



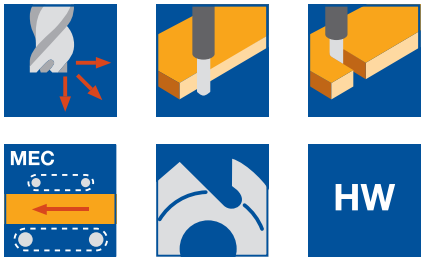

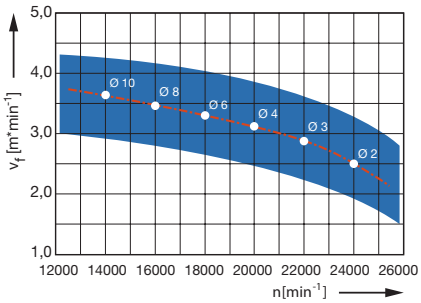

Spiral finishing router cutter

Application:
Router for sizing, grooving, pocket cutting and ramping.

Machine:
Routing machines with/without CNC control, CNC machining centres, special milling machines with spindles to adapt shank tools.

Workpiece material:
Transparent plastics such as PMMA and PC.

Technical information:
For roughing and finishing of PMMA and similar materials for cutting edges as clear as possible, without subsequent polishing.

HW-solid, Z 1, polished cutting groove, ramping
WO 160 2 03

D mm	GL mm	NL mm	S mm	Z	Twist	DRI	ID
10	75	22	10	1	RD	RH	**745006** ●
2	50	11	6	1	RD	RH	**745007** ●
3	50	11	6	1	RD	RH	**745008** ●
4	60	17	6	1	RD	RH	**745009** ●
6	50	12	6	1	RD	RH	**745010** ●
8	60	22	8	1	RD	RH	**745011** ●

RPM: n= 14000 - 24000 min^{-1} v_f = 2,5 - 3,6 m min^{-1}



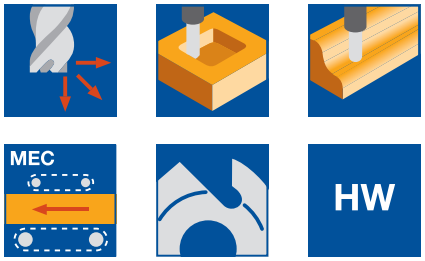

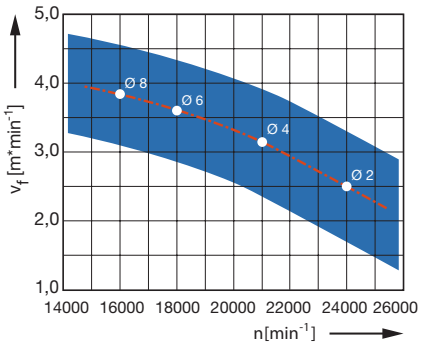

Spiral finishing router cutter

Application:
Router for contour milling.

Machine:
Routing machines with/without CNC conrol. CNC machining centres, special milling machines with cutting spindles to adapt shank tools.

Workpiece material:
Transparent plastics such as PMMA and PC.

Technical information:
For roughing and finishing of PMMA and similar materials for cutting edges as clear as possible.

HW-solid, Z 1, with radius, polished cutting groove
WO 160 2 03

D mm	GL mm	NL mm	AL mm	S mm	Z	R mm	Twist	DRI	ID
2	60	10	10	6	1	1	RD	RH	**745012** ●
4	60	15	15	6	1	2	RD	RH	**745013** ●
6	60	20	20	6	1	3	RD	RH	**745014** ●
8	90	20	60	8	1	4	RD	RH	**745015** ●

RPM: n = 16000 - 24000 min^{-1} v_f = 2,5 - 3,4 m min^{-1}

● available ex stock
□ available at short notice
Instruction manual visit www.leitz.org



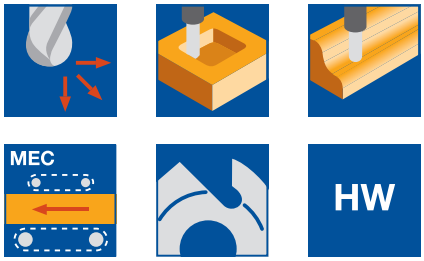

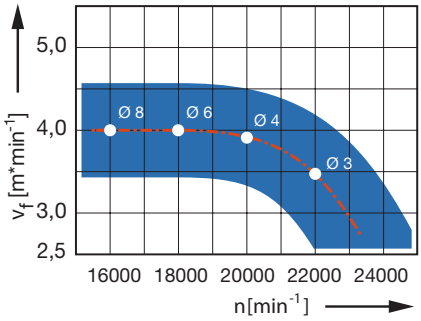

Spiral finishing router cutter

Application:
Router for contour milling.

Machine:
Routing machines with/without CNC conrol. CNC machining centres, special milling machines with cutting spindles to adapt shank tools.

Workpiece material:
Transparent plastics such as PMMA and PC, PUR block material.

Technical information:
For roughing and finishing of PMMA and similar materials for cutting edges as clear as possible.

HW-solid, Z 2, with radius, polished cutting groove
WO 160 2 05

D mm	GL mm	NL mm	AL mm	S mm	Z	R mm	Twist	DRI	ID
3	75	12	25	6	2	1,5	RD	RH	**745048** ●
4	60	5	15	6	2	2	RD	RH	**745049** ●
6	60	10	30	6	2	3	RD	RH	**745050** ●
8	63	7	30	8	2	4	RD	RH	**745051** ●

RPM: n = 16000 - 22000 min^{-1} v_f = 3,4 - 4,0 m min^{-1}

● available ex stock
□ available at short notice
Instruction manual visit www.leitz.org



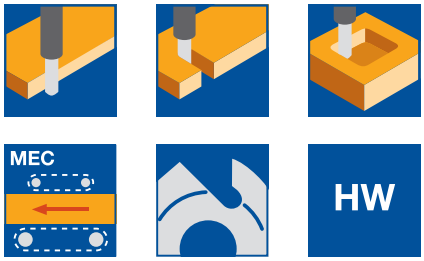

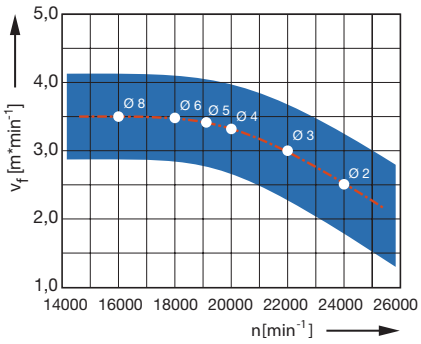

Spiral finishing router cutter

Application:
Router for sizing, grooving and pocket milling.

Machine:
Routing machines with/without CNC conrol. CNC machining centres, special milling machines with cutting spindles to adapt shank tools.

Workpiece material:
Thermoplastics, PVC window profiles.

Technical information:
Universally applicable for good cutting results in sizing.

HW-solid, Z 1, righthand twist
WO 160 2 03

D mm	GL mm	NL mm	S mm	Z	Twist	DRI	ID
2	60	8	6	1	RD	RH	**745016** ●
3	75	15	6	1	RD	RH	**745017** ●
4	60	12	6	1	RD	RH	**745018** ●
5	60	14	6	1	RD	RH	**745019** ●
6	60	16	6	1	RD	RH	**745020** ●
8	75	30	8	1	RD	RH	**745021** ●

RPM: n = 16000 - 24000 min^{-1} v_f = 2,5 - 3,4 m min^{-1}

● available ex stock
□ available at short notice
Instruction manual visit www.leitz.org



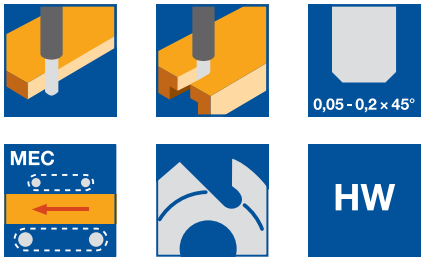

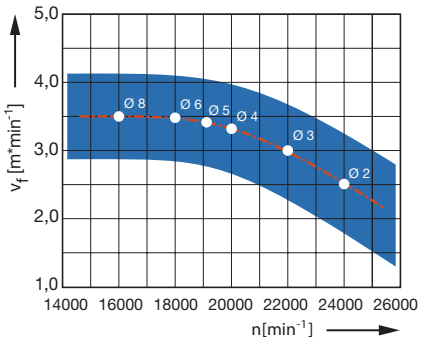

Spiral finishing router cutter

Application:
Router for sizing, slotting and splitting.

Machine:
Routing machines with/without CNC conrol. CNC machining centres, special milling machines with cutting spindles to adapt shank tools.

Workpiece material:
Thermoplastics, PVC window profiles.

Technical information:
Universally applicable for good cutting results in sizing. Lefthand twist for perfect cutting edge.

HW-solid, Z 1, lefthand twist
WO 160 2 03

D mm	GL mm	NL mm	S mm	Z	Twist	DRI	ID
2	60	8	6	1	LD	RH	**745000** ●
3	60	10	6	1	LD	RH	**745001** ●
4	60	25	6	1	LD	RH	**745002** ●
5	75	22	8	1	LD	RH	**745003** ●
6	75	25	8	1	LD	RH	**745004** ●
8	75	30	8	1	LD	RH	**745005** ●

RPM: n = 16000 - 24000 min^{-1} v_f = 2,5 - 3,4 m min^{-1}



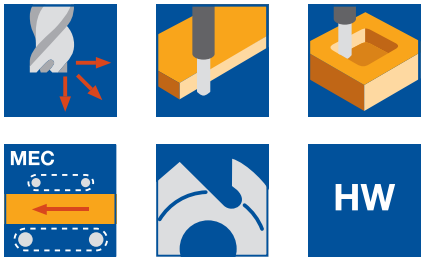

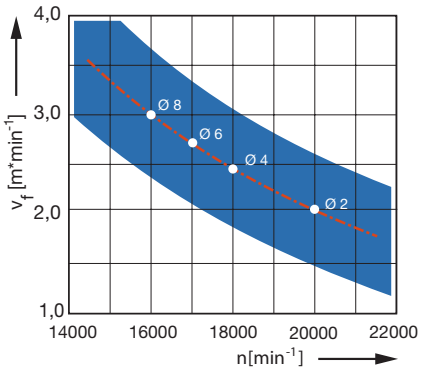

Spiral finishing router cutter

Application:
Router for sizing, grooving, pocket milling, slotting, splitting and axial plunging.

Machine:
Routing machines with/without CNC conrol. CNC machining centres, special milling machines with cutting spindles to adapt shank tools.

Workpiece material:
Aluminium, aluminium extruded profiles, aluminium composite panels.

Technical information:
Special cutting geometry for high surface qualities and burr-free cutting edges. Short machining times with long tool life. When machining aluminum, carbide tools should be operated using cooling lubricants (emulsion or minimum quantity lubrication MQL).

HW-solid, Z 2, polished cutting groove
WO 160 2 05

D mm	GL mm	NL mm	S mm	Z	ER mm	Twist	DRI	ID
2	50	6	6	2	0,1	RD	RH	**745060** ●
4	50	10	6	2	0,1	RD	RH	**745061** ●
6	60	20	6	2	0,1	RD	RH	**745062** ●
8	75	25	8	2	0,1	RD	RH	**745063** ●

RPM: n = 16000 - 20000 min^{-1} v_f = 2,0 - 3,0 m min^{-1}

● available ex stock
□ available at short notice
Instruction manual visit www.leitz.org



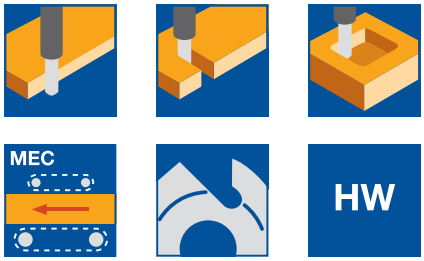

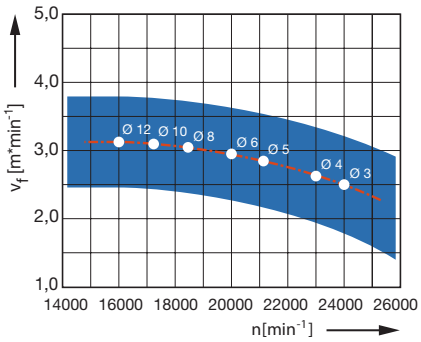

Spiral finishing router cutter

Application:
Router for sizing, pocket milling and grooving.

Machine:
Routing machines with/without CNC conrol. CNC machining centres, special milling machines with cutting spindles to adapt shank tools.

Workpiece material:
Foams, particularly PE and foamed PU.

Technical information:
Special design for pointed corners. Spiral at an angle of 14°, defind edge radius. Processing of vertical edges without lint and fibres.

HW-solid, Z 3, polished cutting groove
WO 160 2 05

D	GL	NL	AL	S	Z	ER	Twist	DRI	ID
mm	mm	mm	mm	mm		mm			
3	75	15	40	3	3	0,2	RD	RH	**745037** ●
4	75	15	40	4	3	0,2	RD	RH	**745038** ●
5	100	20	65	6	3		RD	RH	**745039** ●
6	100	42	75	6	3		RD	RH	**745040** ●
8	100	40	75	8	3		RD	RH	**745041** ●
10	120	50	85	10	3		RD	RH	**745035** ●
12	125	50	90	12	3	0,2	RD	RH	**745036** ●

RPM: n = 16000 - 24000 min^{-1} v_f = 2,5 - 3,0 m min^{-1}



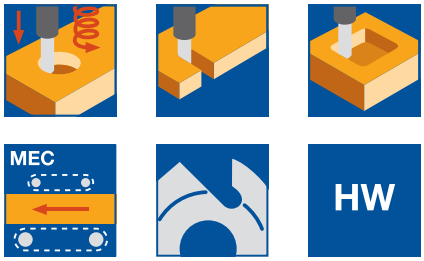

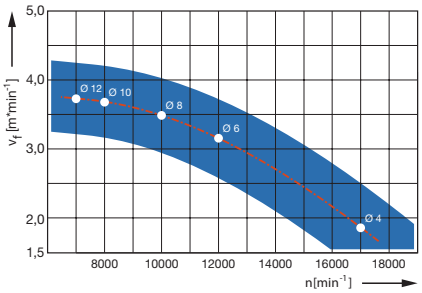

Spiral finishing router cutter

Application:
Router for sizing, grooving, ramping and pocket milling.

Machine:
Routing machines with/without CNC conrol. CNC machining centres, special milling machines with cutting spindles to adapt shank tools.

Workpiece material:
Carbon fiber materials.

Technical information:
Special cutting geometry with chip breaker pitch, for high smooth running.
Face-cutting. Large gullet areas for high cutting volume.

HW-solid, Z 9
WO 160 2 05

D mm	GL mm	NL mm	S mm	Z	Twist	DRI	ID
4	60	10	6	9	RD	RH	**745029** ●
6	60	15	6	9	RD	RH	**745030** ●
8	63	19	8	9	RD	RH	**745031** ●
10	72	22	10	9	RD	RH	**745027** ●
12	83	26	12	9	RD	RH	**745028** ●

RPM: n = 8000 - 14000 min^{-1} v_f = 3,0 - 3,5 m min^{-1}

● available ex stock
□ available at short notice
Instruction manual visit www.leitz.org



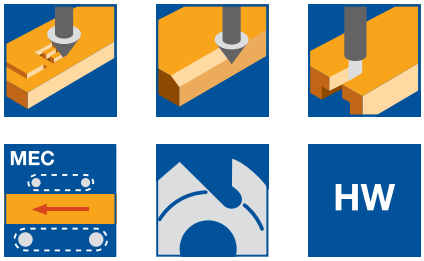

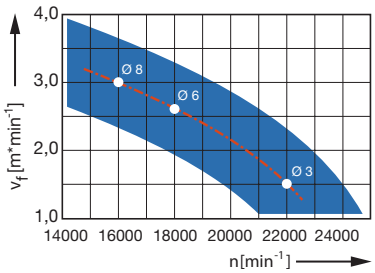

V groove spiral finishing router cutter

Application:
Router for engraving, bevelling and splitting.

Machine:
Routing machines with/without CNC conrol. CNC machining centres, special milling machines with cutting spindles to adapt shank tools.

Workpiece material:
Aluminium, aluminium-compound panels, PMMA, thermoplastics

Technical information:
Special cutting edge geometry for versatile use such as marking, bevelling or profile cutting, in 60° and 90° point angle. When machining aluminum, carbide tools should be operated using cooling lubricants (emulsion or minimum quantity lubrication MQL).

HW-solid, Z 1, polished cutting groove
WO 160 2 03

D	GL	NL	S	Z	R	FAW	Twist	DRI	ID
mm	mm	mm	mm		mm	°			
3	50	8	6	1	0,1	60	RD	RH	**745042** ●
3	50	8	6	1	0,1	90	RD	RH	**745043** ●
6	60	12	6	1	0,1	60	RD	RH	**745044** ●
6	60	12	6	1	0,1	90	RD	RH	**745045** ●
8	63	15	8	1	0,2	60	RD	RH	**745046** ●
8	63	15	8	1	0,2	90	RD	RH	**745047** ●

RPM: n = 16000 - 22000 min^{-1} v_f = 2,0 - 2,5 m min^{-1}



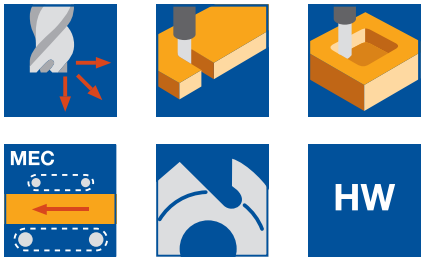

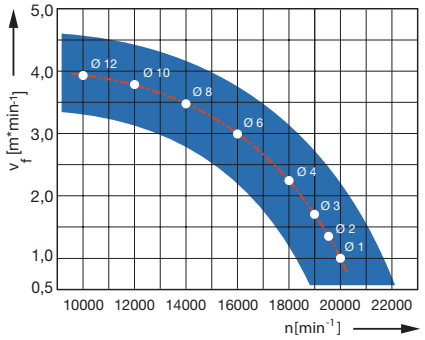

Torus spiral finishing router cutter

Application:
Router for sizing, grooving, slotting, splitting.

Machine:
Routing machines with/without CNC conrol. CNC machining centres, special milling machines with cutting spindles to adapt shank tools.

Workpiece material:
Aluminium, aluminium-compound panels, PUR block material, thermoplastics, duroplastics.

Technical information:
Special cutting geometry for high finish quality and burr-free cutting edges. Exposure for large processing depths. When machining aluminum, carbide tools should be operated using cooling lubricants (emulsion or minimum quantity lubrication MQL).

HW-solid, Z 2, polished cutting groove
WO 160 2 05

D mm	GL mm	NL mm	AL mm	S mm	Z	ER mm	Twist	DRI	ID
1	40	5	5	3	2	0,1	RD	RH	**745052** ●
2	50	10	10	6	2	0,5	RD	RH	**745055** ●
3	50	8	8	6	2	0,2	RD	RH	**745056** ●
4	50	14	14	6	2	0,2	RD	RH	**745057** ●
6	60	20	20	6	2	0,2	RD	RH	**745058** ●
8	63	25	25	8	2	0,2	RD	RH	**745059** ●
10	100	35	35	10	2	0,5	RD	RH	**745053** ●
12	100	16	50	12	2	0,5	RD	RH	**745054** ●

RPM: n = 8000 - 24000 min^{-1} v_f = 1,0 - 4,0 m min^{-1}

● available ex stock
□ available at short notice
Instruction manual visit www.leitz.org










Feed speed v_f depending on cutting depth a_p

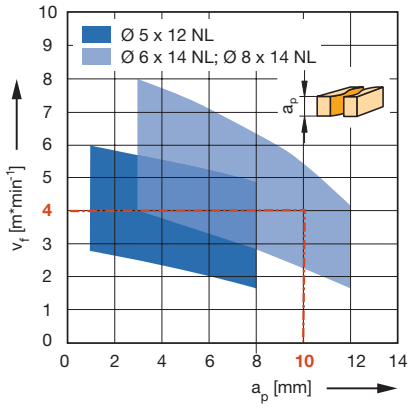

Workpiece material: Plastic coated chipboard
Operation: Sizing
RPM: n = 18000 min^{-1}
Correction factor for v_f: MDF = 0.8; Uncoated chipboard = 1.1

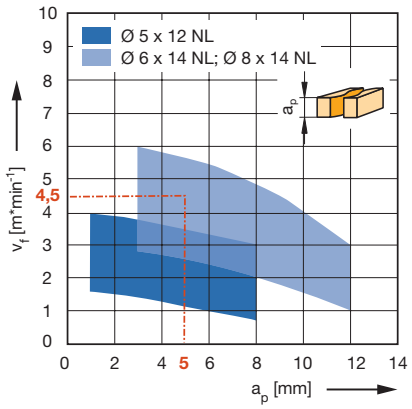

Router cutter Diamaster PRO

Application:
Router for sizing and grooving with continuous cutting edge.

Machine:
Stationary routers with/without CNC control, machining centres, milling machines with spindles to mount shank tools.

Workpiece material:
Chipboard and fibre materials (MDF, HDF etc.), uncoated, plastic coated, veneered etc., duromers, plastomers, laminated materials (HPL-compact laminate, Trespa, multiplex plywood).

Technical information:
Solid tungsten carbide tool body for increased stability and smooth running. DP face edge suitable for plunging. Slightly positive shear angle for improved chip removal when ramp plunging. Axial infeed for grooving and sizing maximum 1.0 - 1.5 x D. Resharpenable up to 3 times with normal wear.

DP, Z 1
WO 120 2 50

D mm	GL mm	NL mm	S mm	Z	DRI	ID
5	60	12	8x35	1	RH	**191086** ●
6	60	14	8x35	1	RH	**191087** ●
8	55	10	8x35	1 (0°)	RH	**191107** ●
8	60	14	8x35	1	RH	**191088** ●

RPM: n = 18000 - 24000 min^{-1}

Workpiece material: Thermoplastics, compound materials
Working step: Sizing
RPM: n = 18000 min^{-1}

● available ex stock
□ available at short notice
Instruction manual visit www.leitz.org



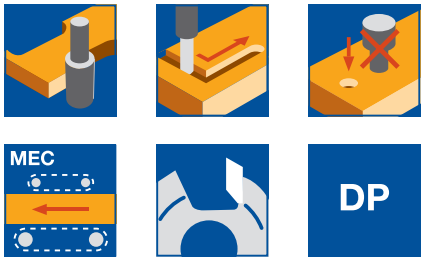

Feed speed v_f depending on cutting depth a_p

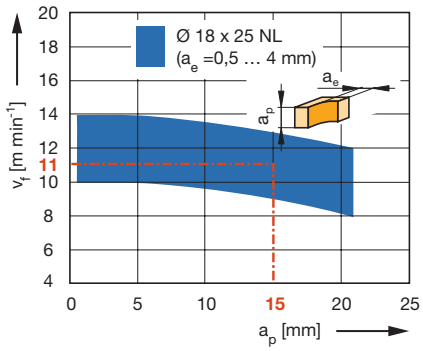

Workpiece material: Plastic coated chipboard
Operation: Jointing
Speed: n = 18000 min^{-1}
Correction factor for v_f: MDF = 0.9; Veneer across grain = 0.7

Router cutter Diamaster PRO

Application:
Router cutter for sizing and grooving with continuous cutting edge. Particularly suitable for machining MDF with direct lacquering or foil coating of the machined edges.

Machine:
Stationary routers with/without CNC control, machining centres, milling machines with spindles to mount shank tools.

Workpiece material:
Hardwood, chipboard and fibre materials (MDF, HDF etc.), uncoated, plastic coated, veneered etc., duromers, plastomers, laminated materials (HPL-compact laminate, Trespa, multiplex plywood).

Technical information:
Negative shear angle (only for ID **091158**) for tear-free edges during grooving and to support the workpiece clamping of smaller parts. Resharpenable 3 to 5 times with normal wear. Maximum chip removal 4 mm; roughing cut required for higher chip removal.

DP, Z 2
WO 140 2 50

D	GL	NL	S	Z	DRI	ID
mm	mm	mm	mm			
10	70	12	12x40	2	RH	**091158** ●
18	90	25	16x50	2	RH	**091190** ●

RPM: n = 16000 - 24000 min^{-1}

● available ex stock
□ available at short notice
Instruction manual visit www.leitz.org





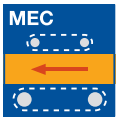



DP

Feed speed v_f depending on cutting depth a_p

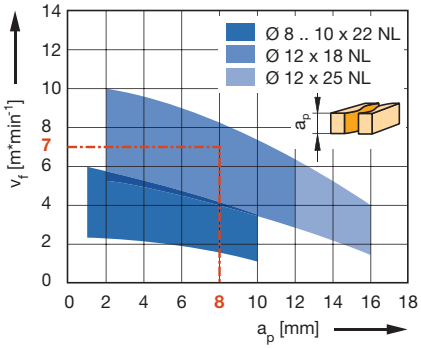

Workpiece material: Plastic coated chipboard
Operation: Sizing
RPM: n = 18000 min^{-1}
Correction factor for v_f: MDF = 0.8; Uncoated chipboard = 1.1

Router cutter Diamaster PRO

Application:
Router for sizing and grooving with continuous cutting edge.

Machine:
Stationary routers with/without CNC control, machining centres, milling machines with spindles to mount shank tools.

Workpiece material:
Chipboard and fibre materials (MDF, HDF etc.), uncoated, plastic coated, veneered etc., duromers, plastomers, laminated materials (HPL-compact laminate, Trespa, multiplex plywood), NF-metals.

Technical information:
Solid tungsten carbide tool body for increased stability and smooth running. DP face edge suitable for ramp plunging. Slightly positive shear angle for improved chip removal when plunging. From D = 12 mm on with full size DP plunging edge. Axial infeed for grooving and sizing maximum 1.0 - 1.5 x D. Resharpenable 2 to 3 times with normal wear.

DP, Z 2
WO 120 2 50

D mm	GL mm	NL mm	S mm	Z	DRI	ID
8	65	15	12x35	2	RH	**191108** ●
8	70	22	12x40	2	RH	**191089** ●
10	70	22	12x40	2	RH	**191090** ●
12	75	18	16x50	2	RH	**191091** ●
12	85	25	16x50	2	RH	**191092** ●

RPM: n = 18000 - 24000 min^{-1}







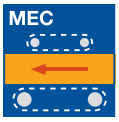





Feed speed v_f depending on cutting depth a_p

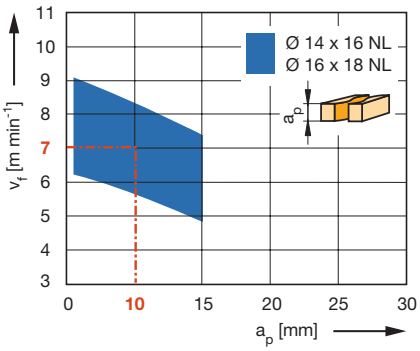

Workpiece material: Duromers, decorative laminates (HPL, CPL), fibre reinforced plastics
Operation: Sizing
Speed: n = 12000 - 18000 min^{-1}

Router cutter Diamaster PLUS

Application:
Router cutter for sizing and grooving with seamless cut. Particularly suitable for machining
MDF with direct lacquering or foil coating of the machined edges.

Machine:
Stationary routers with/without CNC control, machining centres, milling machines with spindles to mount shank tools.

Workpiece material:
Hardwood, chipboard and fibre materials (MDF, HDF etc.), uncoated, plastic coated, veneered etc., duromers, plastomers, laminated materials (HPL-compact laminate, Trespa, multiplex plywood).

Technical information:
Negative shear angle for tear-free edges during grooving and to support the workpiece clamping of smaller parts. Resharpenable 5 to 8 times with normal wear. Short and stable tool design ideal for grooving and sizing of abrasive and hard to machine materials (HPL, Trespa, GFRP, CFRP etc.).

DP, Z 2
WO 120 2 60

D	GL	NL	S	Z	DRI	ID
mm	mm	mm	mm			
14	80	16	20x50	2	RH	**091157** ●
16	80	18	20x50	2	RH	**091156** ●

RPM: Wood derived materials: n = 16000 - 24000 min^{-1}
Plastics: n = 12000 - 18000 min^{-1}

● available ex stock
□ available at short notice
Instruction manual visit www.leitz.org





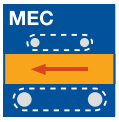



DP

Feed speed v_f depending on cutting depth a_p

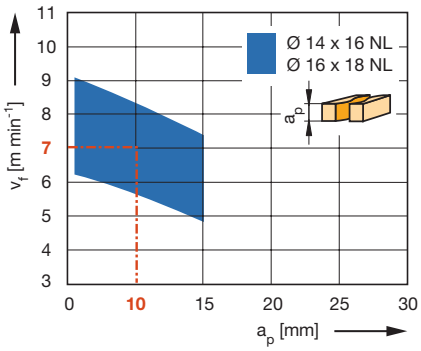

Workpiece material: Duromers, decorative laminates (HPL, CPL), fibre reinforced plastics
Operation: Sizing
Speed: n = 12000 - 18000 min^{-1}

Router cutter Diamaster PLUS

Application:
Router for sizing and grooving with continous cutting edge. Particularly suitable for machining MDF with direct lacquering or foil coating of the machined edges.

Machine:
Stationary routers with/without CNC control, machining centres, milling machines with spindles to mount shank tools.

Workpiece material:
Hardwood, chipboard and fibre materials (MDF, HDF etc.), uncoated, plastic coated, veneered etc., duromers, plastomers, laminated materials (HPL-compact laminate, Trespa, multiplex plywood).

Technical information:
Alternate shear angle of the edges for neutral cutting. DP plunging edge. Resharpenable 5 to 8 times with normal wear. Short and stable tool design ideal for grooving and sizing of abrasive and hard to machine materials (HPL, Trespa, GFRP, CFRP etc.).

DP, Z 2
WO 120 2

D mm	GL mm	NL mm	S mm	Z	DRI	ID
14	80	16	20x50	2	RH	**191093** ●
16	85	20	20x50	2	RH	**191094** ●

RPM: Wood derived materials: n = 16000 - 24000 min^{-1}
Plastics: n = 12000 - 18000 min^{-1}





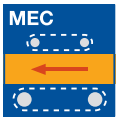



DP

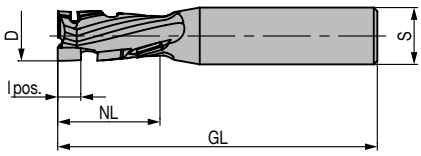

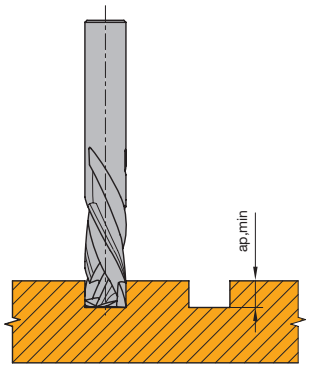

Minimum grooving depth $a_{p\,min}$ for tear-free cut

Router cutter Diamaster PRO

Application:
Router cutter for sizing and grooving with increased performance time in engineered wood boards. For tear-free cut edges on both sides. Suitable for small and medium batch quantities.

Machine:
Stationary routers with/without CNC control, machining centres, milling machines with spindles to mount shank tools.

Workpiece material:
Chipboard and fibre materials (MDF, HDF etc.), uncoated, plastic coated, veneered etc., laminated veneer lumber (plywood, multiplex plywood etc.).

Technical information:
Spiral cutting edge arrangement with alternate shear angle and tungsten carbide plunging tip. Resharpenable 3 to 5 times with normal wear. Cuts to be painted in MDF require finishing with tools with continuous edges. Axial infeed for grooving and sizing maximum 1.0 - 1.8 x D.

DP, Z 1+1
WO 140 2 50

D mm	GL mm	NL mm	lpos. mm	S mm	$a_{p\,min}$ mm	ID LH	ID RH
10	70	22	6,5	12x40	8		**091264** ●
12	70	22	6,5	12x40	8		**091265** ●
12	90	28	6,5	20x50	8		**191095** ●
12	100	28	6,5	25x60	8		**091266** ●
14	90	28	6,5	16x50	8		**091267** ●
16	80	22	9,0	16x50	10		**091268** ●
16	95	22	9,0	25x60	10		**091269** ●
16	90	28	9,0	16x50	10	**091271** ●	**091270** ●
16	100	28	9,0	25x60	10		**091272** ●
16	95	35	9,0	20x50	10		**091273** ●
16	105	35	9,0	25x60	10		**091274** ●
16	105	43	9,0	20x50	10		**191096** ●
16	115	43	9,0	25x60	10	**091276** ●	**091275** ●
18	90	28	9,0	20x50	10		**091277** ●
18	95	35	9,0	20x50	10		**091278** ●
18	105	43	9,0	20x50	10	**091281** ●	**091280** ●
18	115	43	9,0	25x60	10		**091282** ●
20	90	28	9,0	16x50	10		**091283** ●
20	100	28	9,0	25x60	10	**091285** ●	**091284** ●
20	95	35	9,0	20x50	10		**091286** ●
20	105	35	9,0	25x60	10		**091287** ●
20	105	43	9,0	20x50	10	**091289** ●	**091288** ●
20	115	43	9,0	25x60	10		**091290** ●
20	110	48	11,0	20x50	12	**091292** ●	**091291** ●
20	120	48	11,0	25x60	12	**091294** ●	**091293** ●
20	125	53	9,0	25x60	10		**091295** ●
20	130	58	9,0	25x60	10		**191041** ●

DP, Z 1+1, inch types
WO 140 2 50

D mm	D in	GL mm	GL in	NL mm	NL in	lpos. mm	S mm	S in	$a_{p\,min}$ mm	DRI	ID
12,7	1/2“	70	2 3/4“	22,23	7/8“	6,5	12,7x38	1/2“ x 1 1/2“	8	RH	**091296** ●
12,7	1/2“	80	3 1/8“	35	1 3/8“	6,5	12,7x40	1/2“ x 1 1/2“	8	RH	**191065** ●
19,05	3/4“	110	4 3/8“	48	1 7/8“	11,0	19,05x50	3/4“ x 2“	12	RH	**091297** ●

RPM: n = 18000 - 24000 min^{-1}

● available ex stock
□ available at short notice
Instruction manual visit www.leitz.org

Feed speed v_f depending on cutting depth a_p

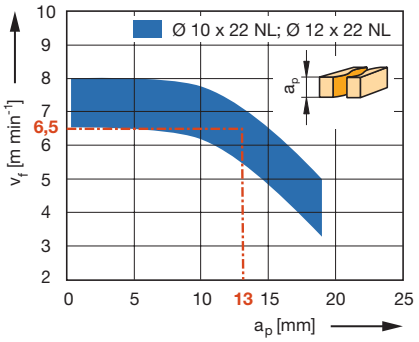

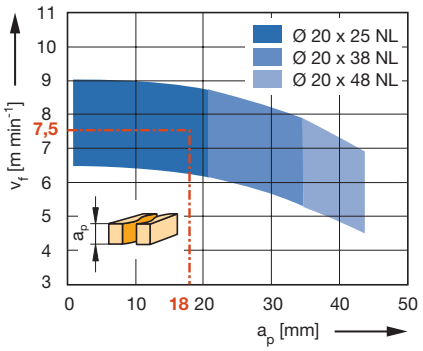

Workpiece material: Plastic coated chipboard
Operation: Sizing
Speed: n = 18000 min^{-1}
Correction factor for v_f: MDF = 0.8; Uncoated chipboard = 1.1; Veneer across grain = 0.7

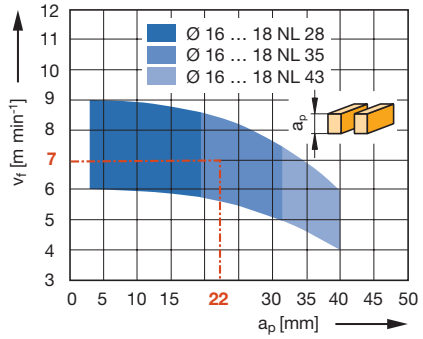

Workpiece material: Plastic coated chipboard
Operation: Sizing
Speed: n = 18000 min^{-1}
Correction factor for v_f: MDF = 0.8; Veneer across grain = 0.7





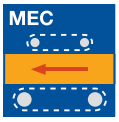



DP

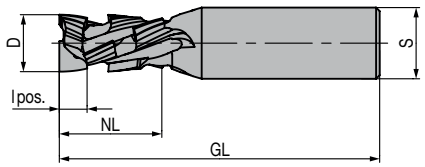

Feed speed v_f depending on grooving depth a_p
1 = Jointing cut a_e = 0.5 - 2 mm
2 = Sizing cut

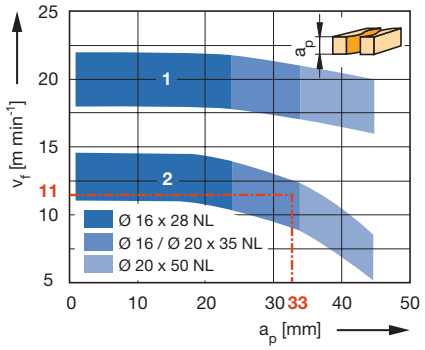

Workpiece material: Plastic coated chipboard
Operation: Jointing, sizing
Speed: n = 18000 min^{-1}
Correction factor for v_f: MDF = 0.6; Veneer across grain = 0.7

Router cutter Diamaster PRO

Application:
Router cutter for sizing and grooving with increased performance time in engineered wood boards. For tear-free cut edges on both sides. Suitable for medium batch quantities. Z 2+2 for increased feed speeds.

Machine:
Stationary routers with/without CNC control, machining centres, milling machines with spindles to mount shank tools.

Workpiece material:
Chipboard and fibre materials (MDF, HDF etc.), uncoated, plastic coated, veneered etc., laminated veneer lumber (plywood, multiplex plywood etc.).

Technical information:
Spiral cutting edge arrangement with alternate shear angle and DP plunging tip. Resharpenable 3 to 5 times with normal wear. Cuts to be painted in MDF require finishing with tools with continuous edges. Axial infeed for grooving and sizing maximum 1.0 - 1.8 x D.

DP, Z 2+2
WO 140 2 50

D mm	GL mm	NL mm	lpos. mm	S mm	$a_{p\ min}$ mm	ID LH	ID RH
14	90	35	7,5	16x50	9		**191083** ●
16	90	28	8,0	20x50	9		**191042** ●
16	95	35	8,0	20x50	9	**191109** ●	**191043** ●
16	105	45	8,0	20x50	9		**191084** ●
18	115	55	8,0	20x50	9		**191085** ●
20	95	35	8,0	20x50	9		**191044** ●
20	105	35	8,0	25x60	9		**191045** ●
20	110	50	8,0	20x50	9		**191046** ●
20	120	50	8,0	25x60	9	**191110** ●	**191047** ●
20	125	58	8,0	25x55	9		**191097** ●

RPM: n = 16000 - 24000 min^{-1}

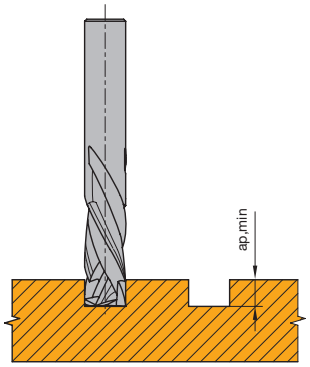

Minimum grooving depth $a_{p\ min}$ for tear-free cut

● available ex stock
□ available at short notice
Instruction manual visit www.leitz.org





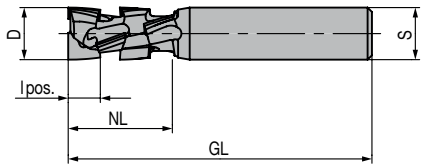

Feed speed v_f depending on cutting depth a_p

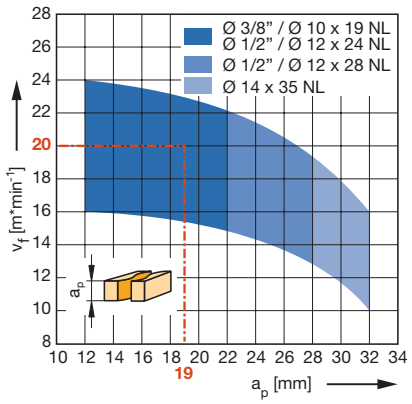

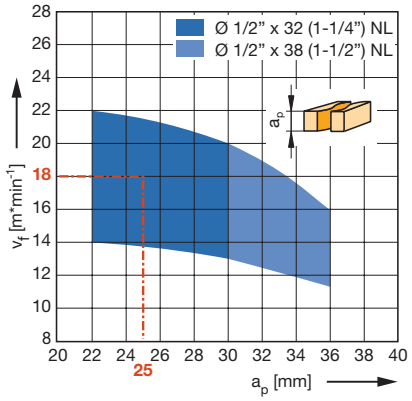

Router cutter Diamaster PRO

Application:
Router cutter for sizing and grooving (Nesting) at high feed speeds. For tear-free cut edges on both sides of the workpiece.

Machine:
Stationary routers with/without CNC control, machining centres, milling machines with spindles to mount shank tools.

Workpiece material:
Chipboard and fibre materials (MDF, HDF etc.), uncoated, plastic coated, veneered etc., laminated veneer lumber (plywood, multiplex plywood etc.).

Technical information:
Spiral cutting edge arrangement with alternate shear angle and real - Z 2 over the complete cutting length, with DP plunging tip. Resharpenable up to 3 times with normal wear. Tool body made from high-tensile material. Important to follow the application data parameters.

DP, Z 2+2, Nesting
WO 140 2 50

D mm	GL mm	NL mm	lpos. mm	S mm	$a_{p\ min}$ mm	DRI	ID
10	65	19	7,5	10x40	9	RH	**191059** ●
12	70	24	7,5	12x42	9	RH	**191060** ●
12	75	28	7,5	12x42	9	RH	**191061** ●
14	90	35	7,5	16x50	9	RH	**191101** ●
16	105	45	8,0	20x50	9	RH	**191105** ●

DP, Z 2+2, Nesting, inch types
WO 140 2 50

D mm	D in	GL mm	GL in	NL mm	NL in	lpos. mm	S mm	S in	$a_{p\ min}$ mm	DRI	ID
9,53	3/8“	65	2 9/16“	21	53/64“	7,5	9,53x40	3/8“ x 1 9/16“	9	RH	**191062** ●
12,7	1/2“	70	2 3/4“	24	15/16“	7,5	12,7x42	1/2“ x 1 5/8“	9	RH	**191063** ●
12,7	1/2“	75	2 15/16“	28	1 1/8“	7,5	12,7x42	1/2“ x 1 5/8“	9	RH	**191064** ●
12,7	1/2“	80	3 3/16“	32	1 1/4“	7,5	12,7x40	1/2“ x 1 9/16“	9	RH	**191102** ●
12,7	1/2“	85	3 1/3“	38	1 1/2“	7,5	12,7x40	1/2“ x 1 9/16“	9	RH	**191103** ●

RPM: n = 18000 - 24000 min^{-1}

Table of recommended workpiece thickness

Id.	NL	workpiece thickness
191059/191062	19	9 – 16 mm
191060/191063	24	13 – 20 (22) mm
191061/191064	28	19 – 25 mm
191102	32	22 – 28 (30) mm
191101	35	22 – 32 mm
191103	38	25 – 35 mm

Workpiece material: Chipboard, plastic coated
Operation: Sizing / Nesting
RPM: n = 24000 min^{-1}
Correction factor for v_f: MDF = 0.8;
Chipboard uncoated = 1.1;
Veneer across the grain = 0.7;
Pre-trimming MDF = 1.2

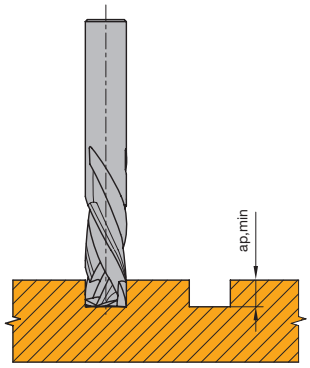

Minimum grooving depth $a_{p\ min}$ for tear-free cut

● available ex stock
□ available at short notice
Instruction manual visit www.leitz.org




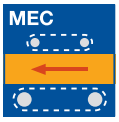






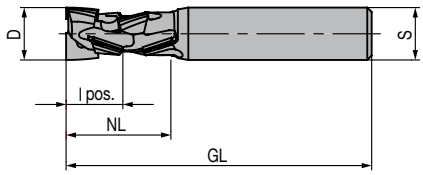

Feed speed v_f depending on cutting depth a_p

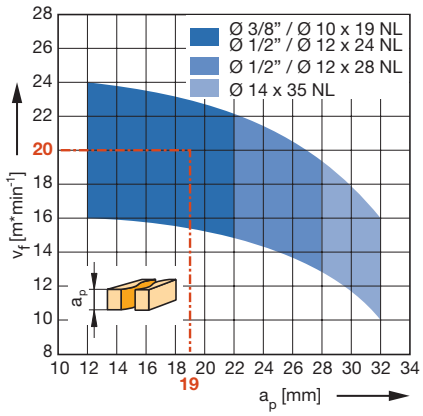

Workpiece material: Plastic coated chipboard
Operation: Sizing / Nesting
RPM: n = 24000 min^{-1}
Correction factor for v_f: MDF = 0.8;
Chipboard uncoated = 1.1;
Veneer across grain = 0.7;
Pre trimming MDF = 1.2

Router cutter Diamaster PRO

Application:
Router cutter for sizing and grooving (Nesting) at high feed speeds. For tear free cut edges on both sides of the workpiece.

Machine:
Overhead routers with/without CNC control, machining centres, special routers with spindles for mounting shank tools.

Workpiece material:
Chipboard and fibre materials (MDF, HDF etc.), uncoated, plastic coated, veneered etc., laminated veneer lumber (plywood, multiplex plywood etc.).

Technical information:
Spiral cutting edge arrangement with alternate shear angle and real - Z 2 over the complete cutting length, with DP plunging tip. Resharpenable up to 3 times with normal wear. Tool body made from high-tensile material. Important to follow the application data parameters. Tools with increased length of positive shear angle for optimized chip collection in the direction of the extraction hood – Leitz DFC®.

DP, Z 2+2, increased length of positive shear angle, Nesting application
WO 140 2 50

D mm	GL mm	NL mm	lpos. mm	S mm	$a_{p\ min}$ mm	DRI	ID
12	70	24	13,0	12x42	14	RH	**191111** ●
12	75	28	18,0	12x42	19	RH	**191112** ●

RPM: n = 18000 - 24000 min^{-1}

Table of recommended workpiece thickness

Id.	NL	workpiece thickness
191111	24	14 – 20 (22) mm
191112	28	19 – 25 mm

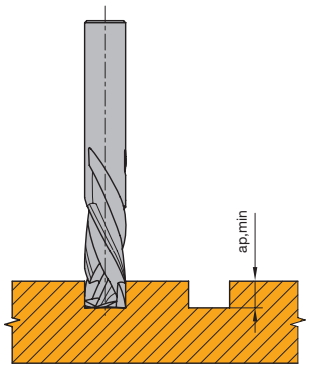

Minimum grooving depth $a_{p\ min}$ for tear-free cut

● available ex stock
□ available at short notice
Instruction manual visit www.leitz.org





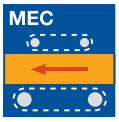







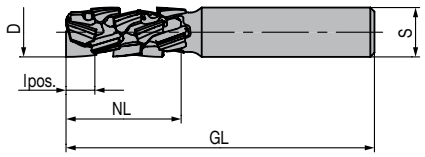

Feed speed v_f depending on cutting depth a_p

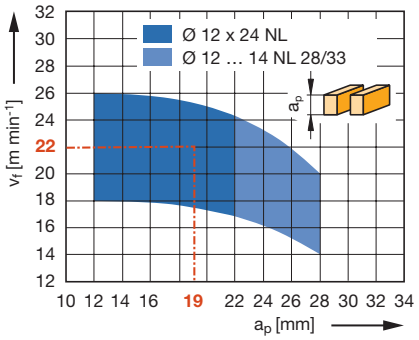

Workpiece material: Plastic coated chipboard
Operation: Sizing / Nesting
Speed: n = 24000 min^{-1}
Correction factor for v_f: MDF = 0.8;
Uncoated chipboard = 1.1;
Veneer across grain = 0.7;
Pre trimming MDF = 1.2

Table of recommended workpiece thickness

Id.	NL	workpiece thickness
191030	19	9 – 16 mm
191031/191057	24	13 – 20 (22) mm
191032/191058	28	19 – 25 mm
191033	33	20 – 30 mm

Router cutter Diamaster PRO^3

Application:
Router cutter for sizing and grooving (Nesting) at high feed speeds. For tear-free cut edges on both sides of the workpiece.

Machine:
Stationary routers with/without CNC control, machining centres, milling machines with spindles to mount shank tools.

Workpiece material:
Chipboard and fibre materials (MDF, HDF etc.), uncoated, plastic coated, veneered etc., laminated veneer lumber (plywood, multiplex plywood etc.).

Technical information:
Spiral cutting edge arrangement with alternate shear angle and real - Z 3 over the complete cutting length, with DP plunging tip. Resharpenable up to 3 times with normal wear. Tool body made from high-tensile material. Important to follow the application data parameters.

DP, Z 3+3, Nesting
WO 140 2 50

D mm	GL mm	NL mm	lpos. mm	S mm	$a_{p\ min}$ mm	DRI	ID
12	65	19	7,5	12x42	9	RH	**191030** ●
12	70	24	7,5	12x42	9	RH	**191031** ●
12	75	28	7,5	12x42	9	RH	**191032** ●
14	90	33	7,5	16x50	9	RH	**191033** ●

DP, Z 3+3, Nesting, inch types
WO 140 2 50

D mm	D in	GL mm	GL in	NL mm	NL in	lpos. mm	S mm	S in	$a_{p\ min}$ mm	DRI	ID
12,7	1/2“	70	2 3/4“	24	15/16“	7,5	12,7x42	1/2“ x 1 5/8“	9	RH	**191057** ●
12,7	1/2“	75	2 15/16“	28	1 1/8“	7,5	12,7x42	1/2“ x 1 5/8“	9	RH	**191058** ●

RPM: n_{max} = 24000 min^{-1}

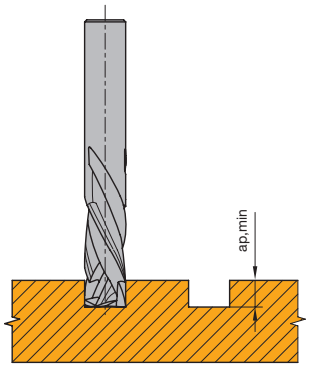

Minimum grooving depth $a_{p\ min}$ for tear-free cut

● available ex stock
□ available at short notice
Instruction manual visit www.leitz.org




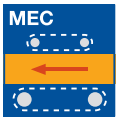






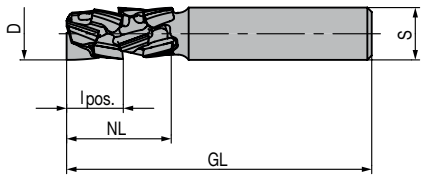

Feed speed v_f depending on cutting depth a_p

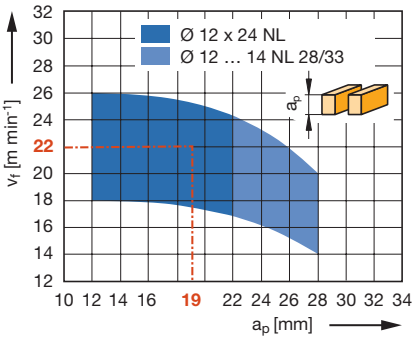

Workpiece material: Plastic coated chipboard
Operation: Sizing / Nesting
Speed: n = 24000 min^{-1}
Correction factor for v_f: MDF = 0.8;
Uncoated chipboard = 1.1;
Veneer across grain = 0.7;
Pre trimming MDF = 1.2

Table of recommended workpiece thickness

Id.	NL	workpiece thickness
191113	24	14 – 20 (22) mm
191114	33	20 – 30 mm

Router cutter Diamaster PRO^3

Application:
Router cutter for sizing and grooving (Nesting) at high feed speeds. For tear free cut edges on both sides of the workpiece.

Machine:
Overhead routers with/without CNC control, machining centres, special routers with spindles for mounting shank tools.

Workpiece material:
Chipboard and fibre materials (MDF, HDF etc.), uncoated, plastic coated, veneered etc., laminated veneer lumber (plywood, multiplex plywood etc.).

Technical information:
Spiral cutting edge arrangement with alternate shear angle and real - Z 3 over the complete cutting length, with DP pluning tip. Resharpenable up to 3 times with normal wear. Tool body made from high-tensile material. Important to follow the application data parameters. Tools with increased length of positive shear angle for optimized chip collection in the direction of the extraction hood – Leitz DFC®.

DP, Z 3+3, increased length of positive shear angle, Nesting application
WO 140 2 50

D mm	GL mm	NL mm	lpos. mm	S mm	$a_{p\ min}$ mm	DRI	ID
12	70	24	13,0	12x42	14	RH	**191113** ●
14	90	33	18,0	16x50	19	RH	**191114** ●

RPM: n_{max} = 24000 min^{-1}

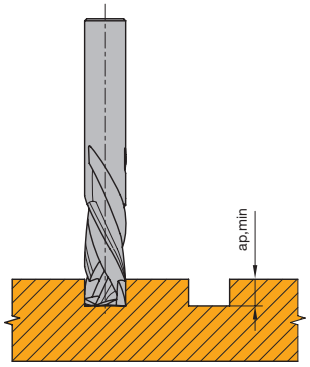

Minimum grooving depth $a_{p\ min}$ for tear-free cut

● available ex stock
□ available at short notice
Instruction manual visit www.leitz.org







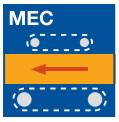





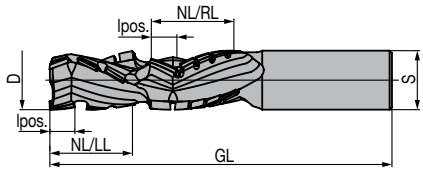

Feed speed v_f depending on cutting depth a_p

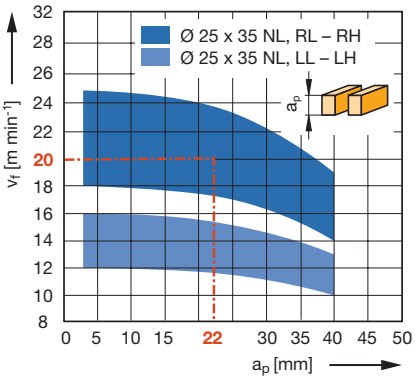

Router cutter Diamaster PRO,
Z 3+3/Z 2+2
Workpiece material: Plastic coated chipboard
Operation: Sizing
Speed: n = 18000 min^{-1}
Correction factor for v_f: MDF = 0.8; Uncoated chipboard = 1.1; Veneer across grain = 0.7

Router cutter Diamaster PRO

Application:
Router cutter for sizing and grooving with increased performance time in engineered wood boards. For tear-free cut edges on both sides of the workpiece. Suitable for right hand and left hand cutting (e.g. protective cutting) without tool change.

Machine:
Stationary routers with/without CNC control, machining centres, milling machines with spindles to mount shank tools.

Workpiece material:
Chipboard and fibre materials (MDF, HDF etc.), uncoated, plastic coated, veneered etc., for tear-free edges on both sides of coated workpieces.

Technical information:
Spiral cutting edge arrangement with tungsten carbide plunging tip. Right hand rotation: Z 3+3, left hand rotation: Z 2+2. Resharpenable 3 to 5 times with normal wear. Right and left hand rotation in one tool (by adjusting the Z-axis and changing the direction of rotation).

DP, RH + LH combination tool
WO 140 2 50

D mm	GL mm	NL mm	lpos. mm	S mm	$a_{p\ min}$ mm	DRI	ID
25	120	24 + 24	11,0	25x50	12	LH, RH	**191034** ●
25	145	35 + 35	11,0	25x55	12	LH, RH	**191020** ●

RPM: n_{max} = 24000 min^{-1}

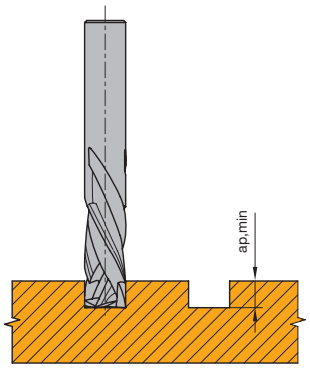

Minimum grooving depth $a_{p\ min}$ for tear-free cut





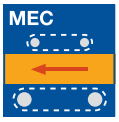



DP

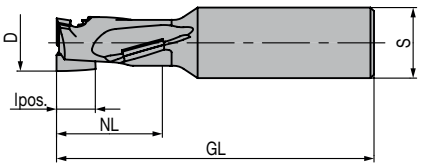

Router cutter Diamaster PLUS

Application:
Router cutter for sizing and grooving with increased performance time in engineered wood boards. For tear-free cut edges on both sides.

Machine:
Stationary routers with/without CNC control, machining centres, milling machines with spindles to mount shank tools.

Workpiece material:
Chipboard and fibre materials (MDF, HDF etc.), uncoated, plastic coated, veneered etc., duromers, plastomers, laminated materials (HPL-compact laminate, Trespa, multiplex plywood).

Technical information:
Cutting edges with alternate shear angle and tungsten carbide plunging tip (ID **090174** with DP plunging edge). Resharpenable 5 to 8 times with normal wear. Cuts for painting in MDF require finishing with tools with continuous edges. Stable and rigid tips suitable for machining abrasive and hard to machine materials (HPL, Trespa, GFRP, CFRP etc.).

DP, Z 1+1
WO 140 2

D mm	GL mm	NL mm	lpos. mm	S mm	$a_{p\ min}$ mm	DRI	ID
12	90	24	7,5	16x50	9	RH	**090174** ●
16	90	28	11,0	20x60	12	RH	**090188** ●
18	110	48	11,5	20x60	12	RH	**091101** ●
20	130	58	11,0	25x60	12	RH	**090167** ●

RPM: n = 16000 - 24000 min^{-1}

Feed speed v_f depending on cutting depth a_p

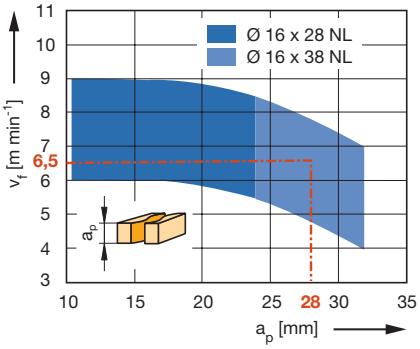

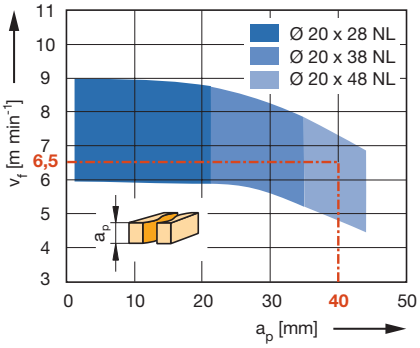

Workpiece material: Plastic coated chipboard
Operation: Sizing
Speed: n = 18000 min^{-1}
Correction factor for v_f: MDF = 0.8; Veneer across grain = 0.7

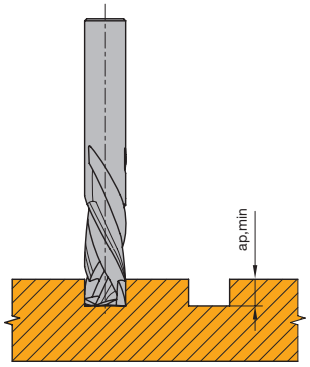

Minimum grooving depth $a_{p\ min}$ for tear-free cut

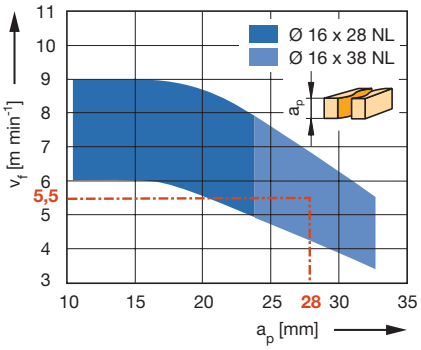

Workpiece material: Decorative laminates
Operation: Sizing
Speed: n = 18000 min^{-1}

● available ex stock
□ available at short notice
Instruction manual visit www.leitz.org





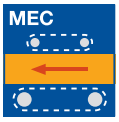



DP

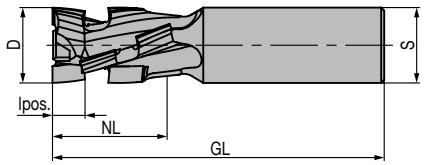

Router cutter Diamaster QUATTRO

Application:
Router cutter for sizing and grooving with increased performance time in engineered wood boards. For tear-free cut edges on both sides. Suitable for medium and large batch quantities. Z 2+2 for increased feed speeds.

Machine:
Stationary routers with/without CNC control, machining centres, milling machines with spindles to mount shank tools.

Workpiece material:
Chipboard and fibre materials (MDF, HDF etc.), uncoated, plastic coated, veneered etc., laminated veneer lumber (plywood, multiplex plywood etc.).

Technical information:
Spiral cutting edge arrangement with alternate shear angle and DP plunging tip (ID **091251**, **091252**, **091253** with tungsten carbide plunging tip). Resharpenable 5 to 8 times with normal wear. Cuts for painting in MDF require finishing with tools with continuous edges.

DP, Z 2+2
WO 140 2

D mm	GL mm	NL mm	lpos. mm	S mm	$a_{p\ min}$ mm	ID LH	ID RH
20	90	28	10,5	20x50	12		**091235** ●
20	110	48	10,5	20x50	12		**091238** ●
20	110	38	10,5	25x60	12		**091241** ●
20	120	48	10,5	25x60	12	**091246** ●	**091247** ●
25	110	38	11,0	25x60	12		**091251** ●
25	120	48	11,0	25x60	12	**091252** ●	**091253** ●

RPM: n = 16000 - 24000 min^{-1}

Feed speed v_f depending on cutting depth a_p

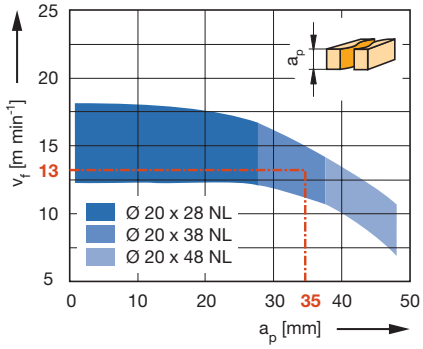

Workpiece material: Plastic coated chipboard
Operation: Sizing
Speed: n = 18000 min^{-1}
Correction factor for v_f: MDF = 0.8; Paper coated = 0.8

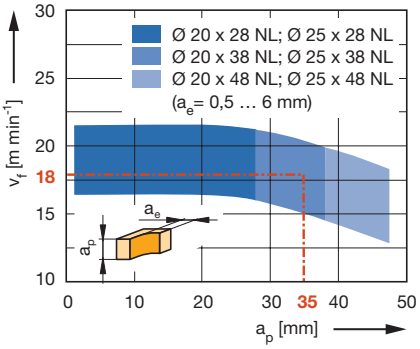

Workpiece material: Plastic coated chipboard
Operation: Jointing
Speed: n = 18000 min^{-1}
Correction factor for v_f: MDF = 0.9; Paper coated = 0.8; Veneer across grain = 0.8

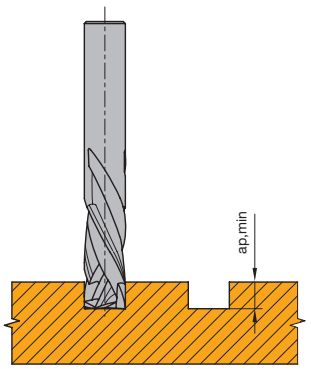

Minimum grooving depth $a_{p\ min}$ for tear-free cut

● available ex stock
□ available at short notice
Instruction manual visit www.leitz.org





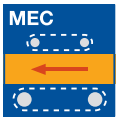



DP

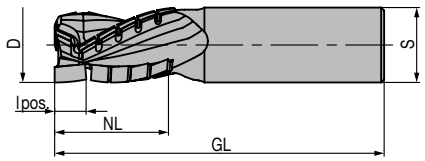

Router cutter Diamaster PLUS, Z 3+3

Application:
Router cutter for sizing and grooving with increased performance time in engineered wood boards. For tear-free cut edges on both sides. Suitable for large batch quantities. Z 3+3 at high feed speeds.

Machine:
Stationary routers with/without CNC control, machining centres, milling machines with spindles to mount shank tools.

Workpiece material:
Chipboard and fibre materials (MDF, HDF etc.), uncoated, plastic coated, veneered etc.

Technical information:
Spiral cutting edge arrangement with alternate shear angle and DP plunging tip. Resharpenable 8 to 12 times with normal wear. Cuts for painting in MDF require finishing with tools with continuous edges. Tools with negative twist support the tool clamping especially for small parts.

DP, Z 3+3, with negative twist
WO 140 2

D mm	GL mm	NL mm	lpos. mm	S mm	$a_{p\ min}$ mm	ID LH	ID RH
18	100	24	10,5	25x60	12		**091204** ●
20	90	24	10,5	20x50	12		**091207** ●
20	100	24	10,5	25x60	12		**091209** ●
20	105	30	10,5	25x60	12	**091170** ●	**091171** ●
20	110	38	10,5	25x60	12		**091211** ●
20	120	46	10,5	25x60	12		**091174** ●
25	100	24	10,5	25x60	12		**091213** ●
25	105	30	10,5	25x60	12	**091176** ●	**091177** ●
25	110	38	10,5	25x60	12	**091214** ●	**091215** ●
25	120	46	10,5	25x60	12	**091179** ●	**091180** ●

RPM: n = 16000 - 24000 min^{-1}

Feed speed v_f depending on cutting depth a_p

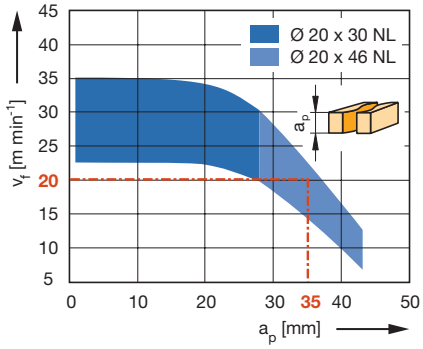

Workpiece material: Plastic coated chipboard
Operation: Sizing
Speed: n = 24000 min^{-1}
Correction factor for v_f: MDF = 0.8; Paper coated = 0.8

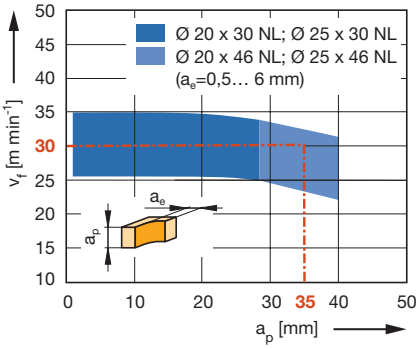

Workpiece material: Plastic coated chipboard
Operation: Jointing
Speed: n = 24000 min^{-1}
Correction factor for v_f: MDF = 0.9; Paper coated = 0.8; Veneer across grain = 0.8

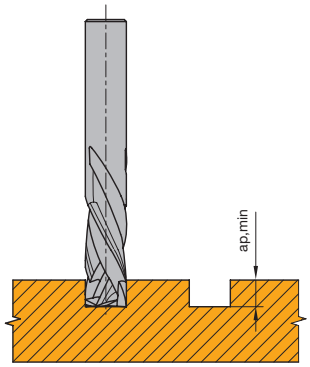

Minimum grooving depth $a_{p\ min}$ for tear-free cut

● available ex stock
□ available at short notice
Instruction manual visit www.leitz.org





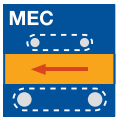







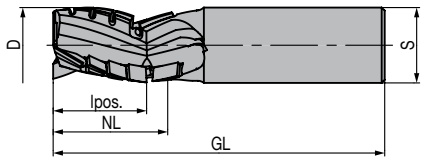

Router cutter Diamaster PLUS, Z 3+3

Application:
Router cutter for sizing and grooving with increased performance time in engineered wood boards. For tear-free cut edges on both sides. Suitable for large batch quantities. Z 3+3 at high feed speeds.

Machine:
Stationary routers with/without CNC control, machining centres, milling machines with spindles to mount shank tools.

Workpiece material:
Chipboard and fibre materials (MDF, HDF etc.), uncoated, plastic coated, veneered etc.

Technical information:
Spiral cutting edge arrangement with alternate shear angle and DP plunging tip. Resharpenable 8 to 12 times with normal wear. Cuts to be painted in MDF require finishing with tools with continuous edges. Tools with positive twist for good chip removal into the extraction system - Leitz DFC®.

DP, Z 3+3, with positive twist, DFC-design
WO 140 2

D mm	GL mm	NL mm	lpos. mm	S mm	$a_{p\ min}$ mm	ID LH	ID RH
16	100	24	8,0	20x50	21		**091254** ●
20	105	30	10,5	25x60	26		**191026** ●
20	110	38	10,5	25x60	31		**191098** ●
20	120	46	10,5	25x60	39		**191099** ●
25	105	30	10,0	25x60	26		**191027** ●
25	120	46	10,0	25x60	39	**091218** ●	**091219** ●

RPM: n = 16000 - 24000 min^{-1}

Feed speed v_f depending on cutting depth a_p

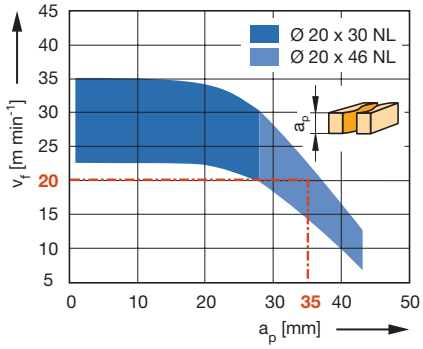

Workpiece material: Plastic coated chipboard
Operation: Sizing
Speed: n = 24000 min^{-1}
Correction factor for v_f: MDF = 0.8; Paper coated = 0.8

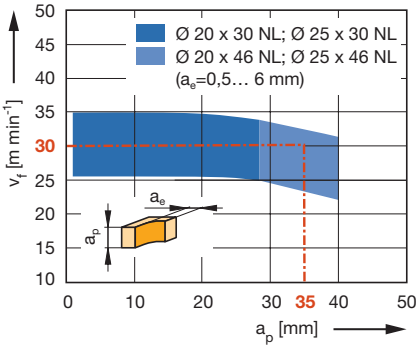

Workpiece material: Plastic coated chipboard
Operation: Jointing
Speed: n = 24000 min^{-1}
Correction factor for v_f: MDF = 0.9; Paper coated = 0.8; Veneer across grain = 0.8

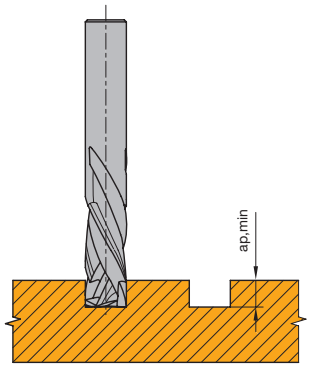

Minimum grooving depth $a_{p\ min}$ for tear-free cut

● available ex stock
□ available at short notice
Instruction manual visit www.leitz.org





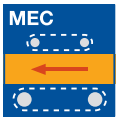



DP

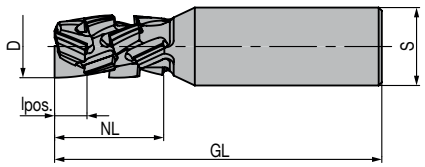

Feed speed v_f depending on cutting depth a_p

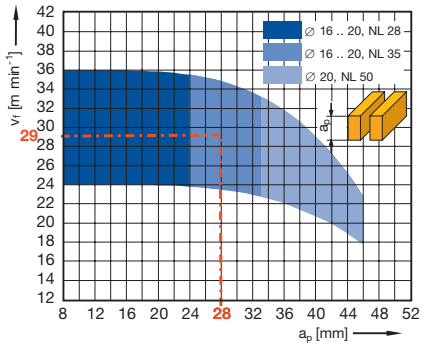

Workpiece material: Plastic coated chipboard
Operation: Sizing
Speed: n = 24000 min^{-1}
Correction factor for v_f: MDF = 0.8; Chipboard, uncoated = 1.1; Veneer across grain = 0.7; Pre-cutting MDF = 1.2

Router cutter Diamaster PLUS^3, Z 3+3

Application:
Router cutter for sizing and grooving with increased performance time in engineered wood boards. For tear-free cut edges on both sides. Suitable for large batch quantities. Z 3+3 for high feed speeds.

Machine:
Stationary routers with/without CNC control, machining centres, milling machines with spindles to mount shank tools.

Workpiece material:
Chipboard and fibre materials (MDF, HDF etc.), uncoated, plastic coated, veneered etc., laminated veneer lumber (plywood, multiplex plywood etc.)

Technical information:
Spiral cutting edge arrangement with alternate shear angle and real - Z 3 over the complete cutting length. DP plunging tip. Resharpenable 8 to 12 times with normal wear. Cuts to be painted in MDF require finishing with tools with continuous edges. Tools with negative twist support the tool clamping especially for small parts.

DP, Z 3+3, with negative shear angle
WO 140 2

D mm	GL mm	NL mm	lpos. mm	S mm	$a_{p\ min}$ mm	ID LH	ID RH
16	85	28	8,0	20x50	9		**191048** ●
16	95	35	8,0	20x50	9	**191050** ●	**191049** ●
20	85	28	10,5	20x50	12		**191051** ●
20	105	35	10,5	25x60	12	**191053** ●	**191052** ●
20	120	50	10,5	25x60	12		**191054** ●

RPM: n = 18000 - 24000 min^{-1}

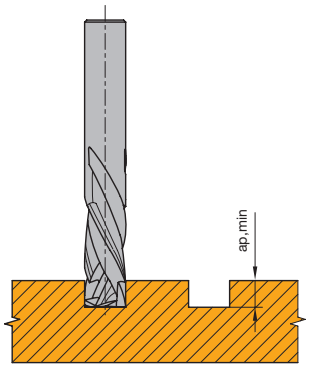

Minimum grooving depth $a_{p\ min}$ for tear-free cut

● available ex stock
□ available at short notice
Instruction manual visit www.leitz.org





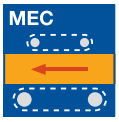



DP

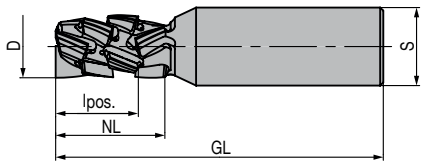

Feed speed v_f depending on cutting depth a_p

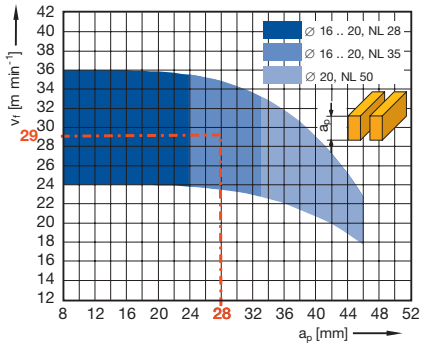

Workpiece material: Plastic coated chipboard
Operation: Sizing
Speed: n = 24000 min^{-1}
Correction factor for v_f: MDF = 0.8; Chipboard, uncoated = 1.1; Veneer across grain = 0.7; Pre-cutting MDF = 1.2

Router cutter Diamaster PLUS^3, Z 3+3

Application:
Router cutter for sizing and grooving with increased performance time in particle boards. For tear free cut edges on both sides. Suitable for large batch quantities. Z 3+3 for high feed speeds.

Machine:
Overhead routers with/without CNC control, machining centres, special routers with spindles to mount shank tools.

Workpiece material:
Chipboard and fibre materials (MDF, HDF etc.), uncoated, plastic coated, veneered etc., laminated veneer lumber (plywood, multiplex plywood etc.).

Technical information:
Spiral cutting edge arrangement with alternate shear angle and real - Z 3 over the complete cutting length. DP plunging tip. Resharpenable 8 to 12 times with normal wear. Cuts to be painted in MDF require finishing with tools with continuous edges. Tools with increased length of positive shear angle for optimized chip collection in the direction of the extraction hood – Leitz DFC®.

DP, Z 3+3, increased length of positive shear angle, DFC design
WO 140 2

D mm	GL mm	NL mm	lpos. mm	S mm	$a_{p\ min}$ mm	DRI	ID
16	85	28	22,0	20x50	23	RH	**191115** ●
20	105	35	26,5	25x60	27	RH	**191116** ●

RPM: n = 18000 - 24000 min^{-1}

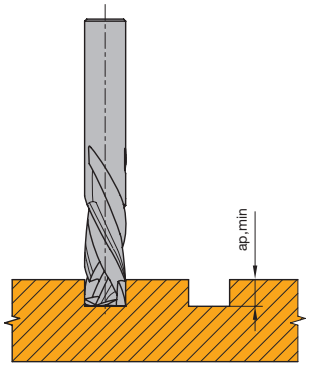

Minimum grooving depth $a_{p\ min}$ for tear-free cut

● available ex stock
□ available at short notice
Instruction manual visit www.leitz.org





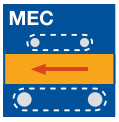



DP

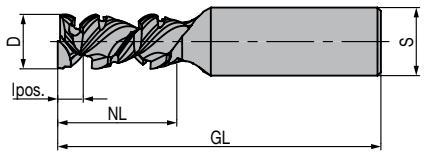

Feed speed v_f depending on cutting depth a_p

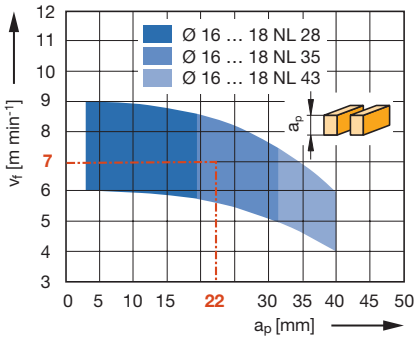

Workpiece material: Plastic coated chipboard
Operation: Sizing
Speed: n = 18000 min^{-1}
Correction factor for v_f: MDF = 0.8; Veneer across grain = 0.7; Extremely sensitive decors = 0.7 - 0.8

Router cutter Diamaster PRO EdgeExpert

Application:
Routers for sizing and grooving with increased performance time in engineered wood boards. For tear-free cutting edges on both sides especially for sensitive and brittle decorative papers, laminating foils and veneers. Suitable for small and medium batch sizes.

Machine:
Stationary routers with/without CNC control, machining centres, milling machines with spindles to mount shank tools.

Workpiece material:
Chipboard and fibre materials (MDF, HDF etc.), uncoated, plastic coated, veneered etc., laminated veneer lumber (plywood, multiplex plywood etc.).

Technical information:
Spiral cutting edge arrangement with alternate shear angle and DP plunging tip. Enlarged shear angle for excellent edge quality for sensitive and brittle decorative papers, laminating foils and veneers. Resharpenable 2 to 4 times with normal wear. Cuts to be painted in MDF require finishing with tools with continuous edges.
ID **191128** with a body made of vibration-damping alloy.

DP, Z 1+1
WO 140 2 50

D mm	GL mm	NL mm	lpos. mm	S mm	$a_{p\ min}$ mm	DRI	ID
16	85	25	7,5	16x50	9	RH	**191069** ●
16	95	35	7,5	20x50	9	RH	**191070** ●

DP, Z 2+2
WO 140 2 50

D mm	GL mm	NL mm	lpos. mm	S mm	$a_{p\ min}$ mm	DRI	ID
14	90	28	8,0	16x50	9	RH	**191128** ●

RPM: n = 18000 - 24000 min^{-1}

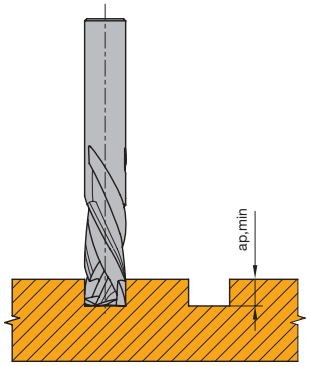

Minimum grooving depth $a_{p\ min}$ for tear-free cut

● available ex stock
□ available at short notice
Instruction manual visit www.leitz.org





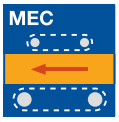



DP

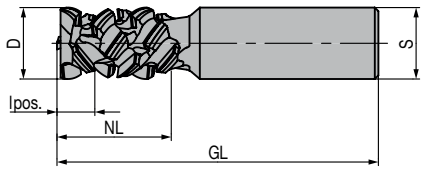

Feed speed v_f depending on cutting depth a_p

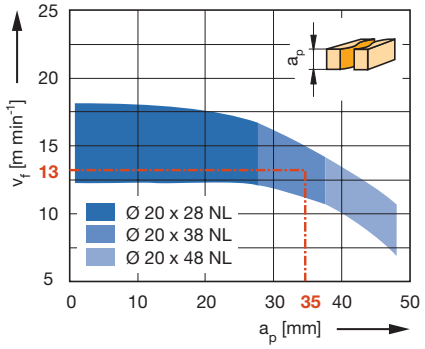

Workpiece material: Plastic coated chipboard
Operation: Sizing
Speed: n = 18000 min^{-1}
Correction factor for v_f: MDF = 0.8; Paper coated = 0.8

Router cutter Diamaster QUATTRO EdgeExpert

Application:
Routers for sizing and grooving with increased performance time in engineered wood boards. For tear-free cutting edges on both sides especially for sensitive and brittle decorative papers, laminating foils and veneers. Suitable for medium and large batch sizes. Z 2+2 for increased feed rates.

Machine:
Stationary routers with/without CNC control, machining centres, milling machines with spindles to mount shank tools.

Workpiece material:
Chipboard and fibre materials (MDF, HDF etc.), uncoated, plastic coated, veneered etc., laminated veneer lumber (plywood, multiplex plywood etc.).

Technical information:
Spiral cutting edge arrangement with alternate shear angle and DP plunging tip. Enlarged shear angle for excellent edge quality for sensitive and brittle decorative papers, laminating foils and veneers. Resharpenable 4 to 6 times with normal wear. Precutting the workpieces is recommended. Cuts to be painted in MDF require finishing with tools with continuous edges.

DP, Z 2+2
WO 140 2

D mm	GL mm	NL mm	lpos. mm	S mm	$a_{p\ min}$ mm	DRI	ID
20	90	32	10,5	20x50	12	RH	**191071** ●
20	120	48	10,5	25x60	12	RH	**191072** ●

RPM: n = 18000 - 24000 min^{-1}

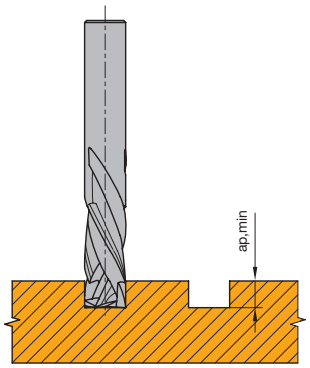

Minimum grooving depth $a_{p\ min}$ for tear-free cut

● available ex stock
□ available at short notice
Instruction manual visit www.leitz.org





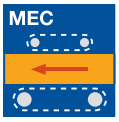



DP

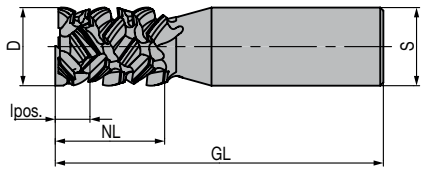

Router cutter Diamaster PLUS³ EdgeExpert, Z 3+3

Application:
Routers for sizing and grooving with increased performance time in engineered wood boards. For tear-free cutting edges on both sides especially for sensitive and brittle decorative papers, laminating foils and veneers. Suitable for very large batch sizes. Z 3+3 for increased feed rates.

Machine:
Stationary routers with/without CNC control, machining centres, milling machines with spindles to mount shank tools.

Workpiece material:
Chipboard and fibre materials (MDF, HDF etc.), uncoated, plastic coated, veneered etc., laminated veneer lumber (plywood, multiplex plywood etc.).

Technical information:
Spiral cutting edge arrangement with alternate shear angle and DP plunging tip. Enlarged shear angle for excellent edge quality for sensitive and brittle decorative papers, laminating foils and veneers. Resharpenable 5 to 8 times with normal wear. Precutting the workpieces is recommended. Especially suitable on CNC machining centres with laser edgebanding technology. Cuts to be painted in MDF require finishing with tools with continuous edges.

DP, Z 3+3, symmetric edge arrangement
WO 140 2

D mm	GL mm	NL mm	lpos. mm	S mm	$a_{p\ min}$ mm	DRI	ID
25	105	30	11,0	25x60	12	RH	**191073** ●
25	105	35	11,0	25x55	12	RH	**191074** ●
25	120	48	11,0	25x60	12	RH	**191075** ●

RPM: n = 18000 - 24000 min^{-1}

Feed speed v_f depending on cutting depth a_p

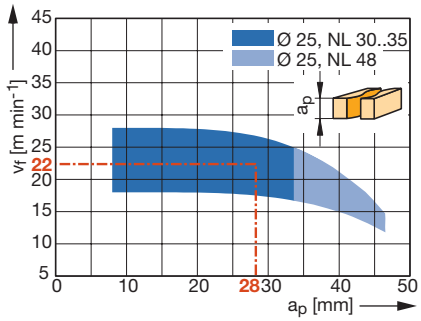

Workpiece material: Plastic coated chipboard
Operation: Sizing
Speed: n = 24000 min^{-1}
Correction factor for v_f: MDF = 0.8;
Veneer across grain = 0.7;
Extremely sensitive decors = 0.7 - 0.8

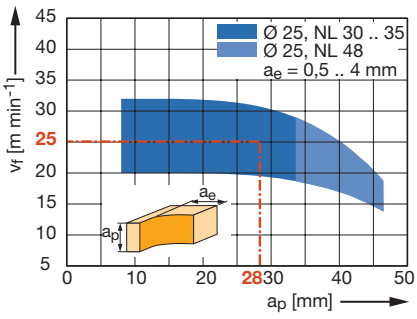

Workpiece material: Plastic coated chipboard
Operation: Jointing
Speed: n = 24000 min^{-1}
Correction factor for v_f: MDF = 0.8;
Veneer across grain = 0.7;
Extremely sensitive decors = 0.7 - 0.8

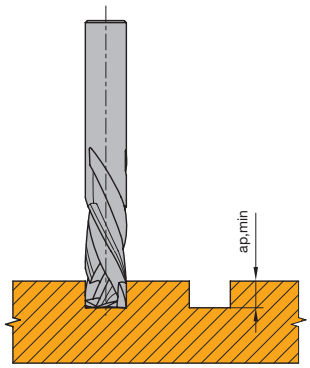

Minimum grooving depth $a_{p\ min}$ for tear-free cut

● available ex stock
□ available at short notice
Instruction manual visit www.leitz.org









HS

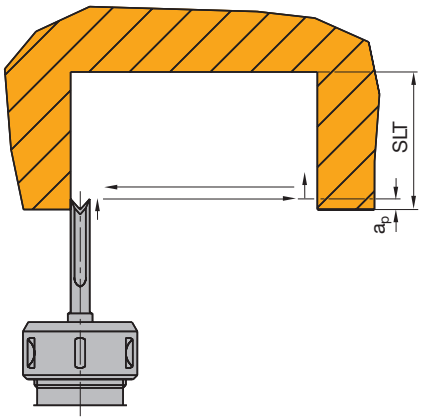

Application example of cutting slots
a_p = 0.8 mm (reciprocating movement)

Slot mortising bits

Application:
Router cutter for cutting tear-free longitudinal slots with stepwise infeed.

Machine:
Special routers with reciprocating spindles.

Workpiece material:
Softwood and hardwood.

Technical information:
For softwood and hardwood. Suitable for right hand and left hand rotation, tools resharpenable on the face side. Constant diameter after sharpening.

HS, Z 2
WB 510 0

D mm	GL mm	S mm	SLT mm	QAL	ID
6	90	13x40	38	HS	**037020** ●
8	95	13x40	42	HS	**037022** ●
10	105	13x40	50	HS	**037024** ●
12	115	13x40	60	HS	**037026** ●

RPM: n = 4500 - 9000 min^{-1}

Working step/Application	Jointing, rebating and bevelling.
Workpiece material [recommended cutting material]	Softwood and hardwood [HW]. Chipboard and fibre materials (MDF, HDF etc.), uncoated, plastic coated, veneered etc. [HW, DP]. Plywood [HW, DP]. Duromers [HW, DP]. Plastomers [HW, DP]. Solid surface material (Corian, Varicor etc.) [HW, DP].
Machine	Stationary routers with/without CNC control. Milling machines with spindles to mount shank tools.
Operation	For conventional and climb cut operations, limited chip removal.

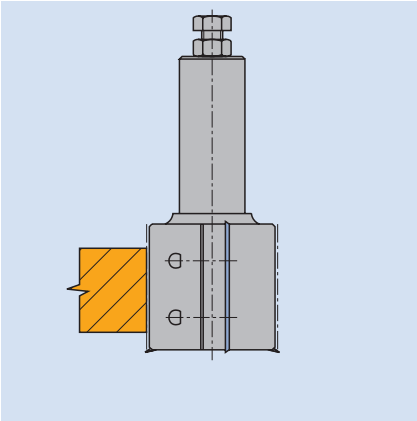

Jointing

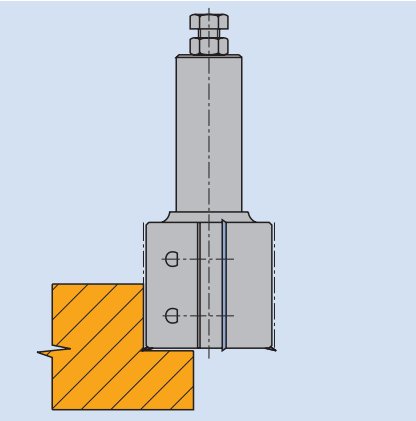

Rebating

Bevelling with adjustable bevel cutterhead

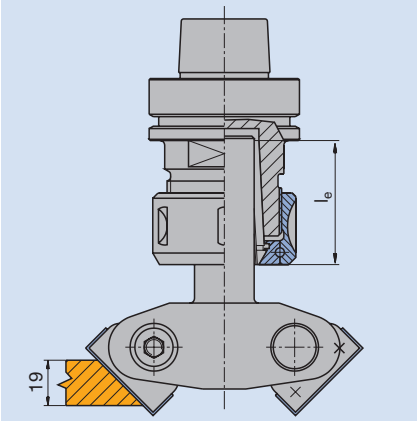

Bevelling top edge

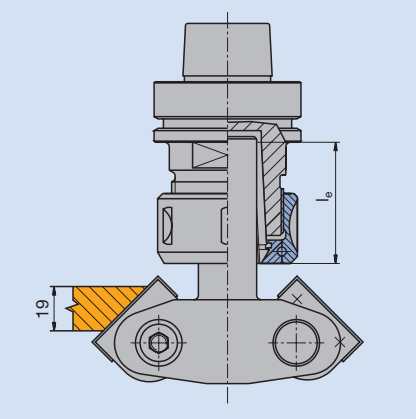

Bevelling bottom edge

Note:
When bevelling from below, the minimum shank clamping length l_e must be observed. Under no circumstances must the tool be clamped at a shorter length.

Shank d x e	l_e min [mm]
20 x 50	40
25 x 60	45

d = Shank diameter
e = Shank length

Application parameters	**RPM/feed speed** The recommended RPM and feed speeds are detailed in the diagrams next the tool tables.
Information	Smooth cutting results can only be achieved with tools having a continuous cutting edge. Spurs are required when rebating solid wood.
Workpiece clamping	Sufficient workpiece clamping is very important on stationary machines. Insufficient clamping can reduce both the cut quality and tool life considerably. Panels can be held in place with vacuum clamping, but sometimes additional mechanical clamping is required. Small and arched workpieces in particular require special jigs or clamping devices which must be made by the customer or sourced from specialist suppliers.



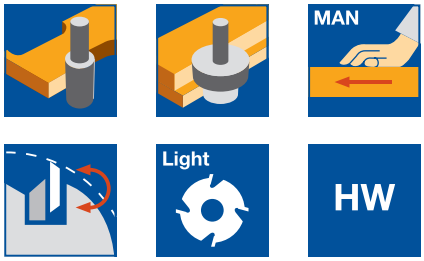

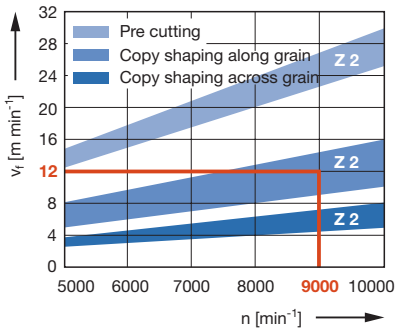

Feed speed v_f depending on the number of teeth Z and speed n for solid wood (pre trimming and copy shaping)
Example for tool diameter 125 mm:
n = 9000 min^{-1}
Z 2
Application:
copy shaping along the grain
v_f = 12 m min^{-1}

Order example:
Tool set ID **132737** mounted on arbor ID **042951**, HSK-F 63 (A = 80 mm). When giving the arbor ID observe the required clamping diameter.

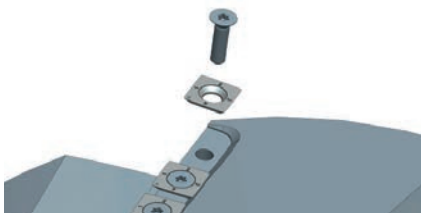

Copy shaping cutterhead - HeliCut 15

Application:
For pre-cutting, jointing and copy shaping of large cutting depths, along and across to the fibre direction. For copy shaping of arched workpieces with template, ball bearing and guide ring, as well as for the application on CNC controlled stationary routers e.g. joinery machines, window manufacturing plants.

Machine:
Spindle moulders and profile milling machines, double-end tenoner, stationary routers with/without CNC control.

Workpiece material:
Softwood and hardwood, glulam and laminated wood.

Technical information:
Noise reduced design with staggered knives, applicable for MAN and MEC. Mountable on clamping arbor. Also applicable for rebating. Application of the same knives as peripheral knife and spur. The cutting edges of the HW knives are numbered. No clamping wedges, direct tangential knife clamping thus easy handling of the knife change without further setting gaugesd. By default mounted with HW turnblade knives ID **009543**.

Copy shaping cutterhead - HeliCut 15
SL 499 1, WW 230 2 07, WW 230 1 07

Tool Type	ABM mm	QAL	AM PCS	Z	V	ID
Cutterhead	60x81,5x20	HW-MF	16	2	2	**132600** ●
Cutterhead mounted on arbor	1-part	HW	16	2	2	**132736** □
Cutterhead	80x81,5x30	HW-MF	16	2	2	**132608** ●
Cutterhead mounted on arbor	1-part	HW	16	2	2	**132737** □
Cutterhead	125x93,7x30	HW-MF	20	2	2+2	**132604** ●
Cutterhead mounted on arbor	1-part	HW	20	2	2+2	**132738** □
Cutterhead	125x116,6x30	HW-MF	24	2	2+2	**132605** ●
Cutterhead mounted on arbor	1-part	HW	24	2	2+2	**132739** □

RPM: D 60 mm: n_{max} = 20000 min^{-1}
D 80 mm: n_{max} = 18000 min^{-1}
D 125 mm: n_{max} = 12000 min^{-1}

More dimensions on request.

Spare knives:

BEZ	ABM mm	QAL	BEM	VE PCS	ID
Turnblade knife	15x15x2,5	HW-MF	HeliCut 15	10	**009543** ●
Turnblade knife	15x15x2,5	HW	HeliCut 15	10	**009549** ●

Spare parts:

BEZ	ABM mm	for D mm	ID
Countersink screw, Torx® 20	M5x12	60	**007898** ●
Countersink screw, Torx® 20	M5x14.2-8.8	80	**007394** ●
Countersink screw, Torx® 20	M5x18	125	**114030** ●
Torx® key	Torx® 20		**006091** ●

● available ex stock
□ available at short notice
Instruction manual visit www.leitz.org



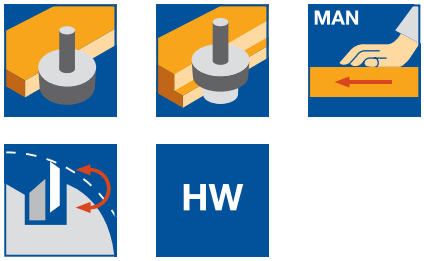

Feed speed v_f depending on cutting depth a_p

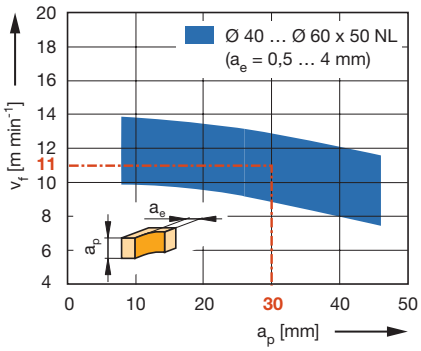

Workpiece material: Plastic coated chipboard
Operation: Jointing
Speed: n = 16000 min^{-1}
Correction factor for v_f: MDF = 0.9;
Paper coated = 0.8;
Machining across grain = 0.7

Turnblade jointing / rebating cutterhead

Application:
For jointing and rebating with constant tool diameter.

Machine:
Stationary routers with/without CNC control, machining centres.

Workpiece material:
Softwood and hardwood, chipboard and fibre materials (MDF, HDF etc.), uncoated, plastic coated, veneered etc., laminated veneer lumber (plywood, multiplex plywood etc.).

Technical information:
HW turnblades Z 2 with straight cut for offset-free areas on pre-cut workpieces or on workpieces sized with roughing cutters. Mounted spurs especially for the production of tear-free rebates in softwood and hardwood. Smooth running through closed, round shape of the tool body.

HW, Z 2 / V 2
WL 402 1

D mm	GL mm	SB mm	S mm	ID
40	120	50	25x60	**039235** ●
50	120	50	25x60	**039239** ●
60	113	50	25x60	**039243** ●

RPM: n_{max} = 18000 min^{-1}

Spare knives:

Part-no.	BEZ	ABM mm	QAL	VE PCS	ID
1	Turnblade spur VS1	14x14x2	HW-F	10	**005099** ●
2	Turnblade knife	50x12x1,5	HW-05F	10	**005086** ●

Spare parts:

Part-no.	BEZ	ABM mm	for D mm	ID
3	Clamping wedge	48x11,6x9		**009871** ●
4	Screw with slot	M5x12		**005744** ●
5	Allen screw	M8x8	40/50	**006245** ●
5	Allen screw	M8x14	60	**006073** ●
	Allen key	SW 4		**005445** ●

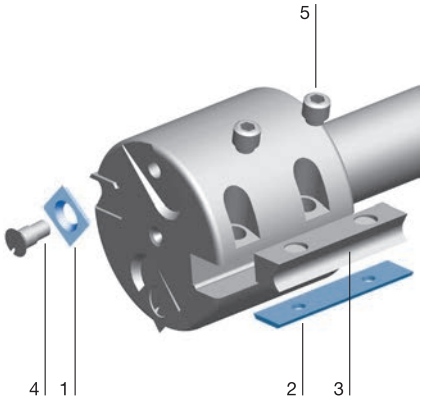



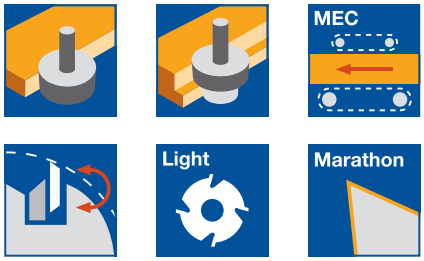

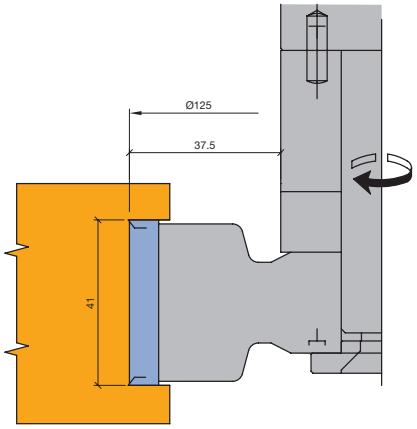

Order example:
Tool set ID **426201** mounted on arbor ID **042847**, HSK-F 63 (A = 80 mm). When ordering choose arbors with d = 20 mm and clamping length 70 mm.

Turnblade jointing / rebating cutterhead

Application:
Optimized for rebating, jointing and grooving with and against feed.

Machine:
Stationary routers with/without CNC control, CNC machining centres.

Workpiece material:
Softwood and hardwood, compound materials of solid wood and wood derived materials, uncoated, plastic coated, veneered etc., laminated veneer lumber (plywood, multiplex plywood etc.).

Technical information:
Cutterhead with turnblades and alternate shear angle, righthand rotation. Tool body in leightweight aluminium for a better dynamic situation.

HW, Z 2 / V 2
SL 199 2, SW 500 2

Tool Type	QAL	Z	V	ID
Cutterhead with spacers	MC	2	2	**426200** ●
Cutterhead mounted on arbor	MC	2	2	**426201** □

RPM: n_{max} = 13700 min^{-1}

Spare knives:

BEZ	ABM mm	ID
Turnblade knife Marathon	40x8x1,5	**601608** ●
Turnblade spur VS2	19x19x2	**005115** ●

Spare parts:

BEZ	ABM mm	ID
Clamping wedge	38x18,75x8,27	**630209** ●
Countersink screw, Torx® 20	M5x8.5	**007808** ●
Clamping screw w. disc, Torx® 20	M5x18.5	**007446** ●
Cylindrical screw with ISK	M5x80	**007097** ●
Torx® key	Torx® 20	**117503** ●
Allen key	SW 4, L 100	**005451** ●

● available ex stock
□ available at short notice
Instruction manual visit www.leitz.org



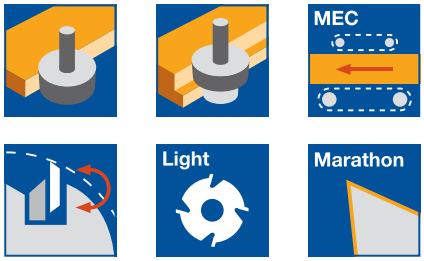

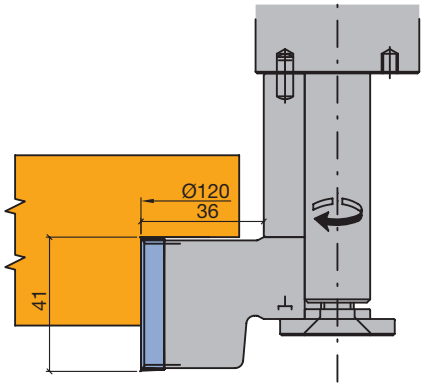

Order example:
Tool set ID **426203** mounted on arbor ID **042847**, HSK-F 63 (A = 80 mm). When ordering choose arbors with d = 20 mm and clamping lenght 70 mm.

Turnblade jointing / rebating cutterhead

Application:
Optimized for rebating, jointing and grooving with and against feed.

Machine:
Stationary routers with/without CNC control, CNC machining centres.

Workpiece material:
Softwood and hardwood, compound materials of solid wood and wood derived materials, uncoated, plastic coated, veneered etc., laminated veneer lumber (plywood, multiplex plywood etc.).

Technical information:
Cutterhead with turnblades and alternate shear angle, righthand rotation. Knife seatings for grooving and edging knives for seal groove and edge roundings. Tool body in lightweight aluminium for a better dynamic situation.

HW, Z 2 / V 2, with seatings for edging knives
SL 499 2, SW 530 2

Tool Type	QAL	Z	V	ID
Cutterhead with spacers	MC	2	2	**426202** ●
Cutterhead mounted on arbor	MC	2	2	**426203** □

RPM: n_{max} = 14300 min^{-1}

Spare knives:

BEZ	ABM mm	R mm	FAW °	ID
Turnblade knife Marathon	40x8x1,5			**601608** ●
Turnblade spur VS2	19x19x2			**005115** ●
Edging knife	KM 11/0		45°	**008268** ●
Edging knife	KM 12/3	2		**008307** ●
Turnblade grooving knife NA5	35,2x15x5			**008318** ●
Turnblade grooving knife NA4	35.2x15x4			**008317** ●

Spare parts:

BEZ	BEM	ABM mm	ID
Set of spacers	for groove/edge knives	12.9x20x6.1	**028565** ●
Spacer	for groove/edge knives	13/6,1x3	**028185** ●
Spacer	for groove/edge knives	13/6,1x1	**028037** ●
Countersink screw, Torx® 20	for groove/edge knives	M6x40	**006090** ●
Countersink screw, Torx® 20	for groove/edge knives	M6x14	**006085** ●
Clamping wedge		38x18,75x8,27	**630209** ●
Countersink screw, Torx® 20	for spurs	M5x8.5	**007808** ●
Clamping screw w. disc, Torx® 20		M5x18.5	**007446** ●
Cylindrical screw with ISK		M5x80	**007097** ●
Torx® key		Torx® 20	**117503** ●
Allen key		SW 4, L 100	**005451** ●

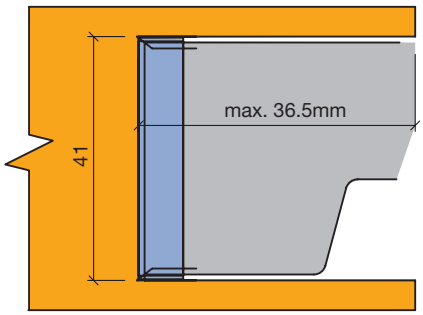

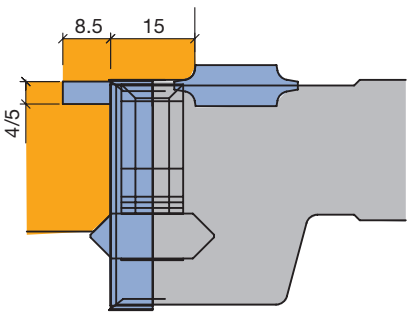

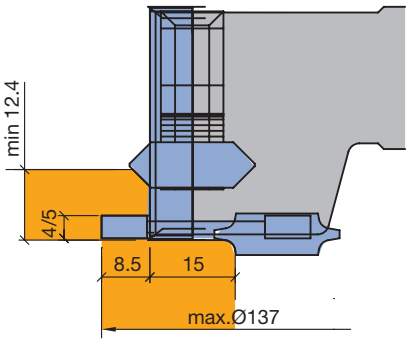

● available ex stock
□ available at short notice
Instruction manual visit www.leitz.org



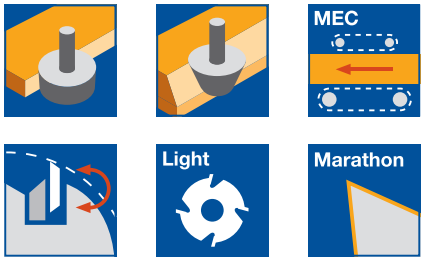

Examples

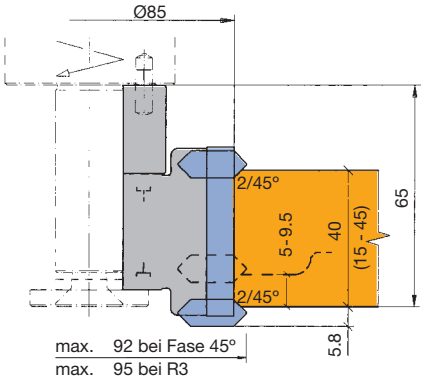

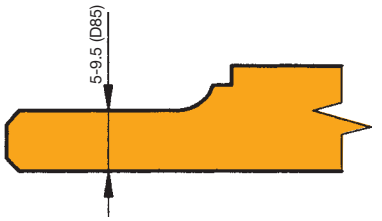

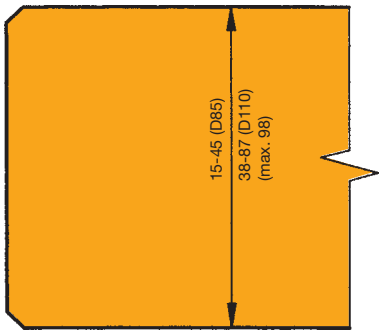

Jointing cutterhead set with edging knives

Application:
For jointing and rounding or bevelling narrow edges with a constant tool diameter.

Machine:
Stationary routers with/without CNC control, machining centres.

Workpiece material:
Softwood and hardwood, compound materials of solid wood and wood derived materials, uncoated, plastic coated, veneered etc., laminated veneer lumber (plywood, multiplex plywood etc.).

Technical information:
Tungsten carbide turnblade knives Z 2 with shear angles. Narrow edge profiling with edging knives mounted on both sides of tool. Smooth running due to closed, round tool body.

HW, Z 2, with seatings for edging knives
SL 299 2, SW 510 2, WW 211 2

Tool Type	ABM mm	QAL	Z	ID
Tool set without arbor, with spacer	85x50x20,1-part	MC	2	**426204** ●
Tool set mounted on arbor	1-part,HD40	MC	2	**426205** □
Tool	110x100x28x30	MC	2	**125690** ●
Tool set mounted on arbor	1-part	MC	2	**426206** □

RPM: D 85 mm: n_{max} = 17900 min^{-1}
D 110 mm: n_{max} = 15600 min^{-1}

ID **125690** and ID **426206**: Edging knives are not included, these have to be chosen separately.
Unless stated otherwise, tools are right hand rotation.
Cutter arbor see section Clamping Systems.

Spare knives:

BEZ	ABM mm	QAL	R mm	FAW °	VE PCS	ID
Turnblade knife Marathon	50x8x1,5	HW-05 MC			10	**601638** ●
Turnblade knife Marathon	100x8x1,5	HW-05 MC			1	**601642** ●
Edging knife	KM 12/4	HW-F	1,5			**008272** ●
Edging knife	KM 12/3	HW-F	2			**008307** ●
Edging knife	KM 12/0	HW-F	3			**008270** ●
Edging knife	KM 15/0	HW-F	3			**008275** ●
Edging knife	KM 12/1	HW-F	3			**008271** ●
Edging knife	KM 11/0	HW-F		45°		**008268** ●

Spare parts:

BEZ	ABM mm	ID
Clamping wedge	48x18,75x8,27	**630211** ●
Clamping wedge	98x18,75x8,27	**630215** ●
Clamping screw w. disc, Torx® 20	M5x18.5	**007446** ●
Countersink screw, Torx® 20	M6x35	**007098** ●
Torx® key	Torx® 20	**117503** ●
Magnetic setting gauge	0.3/0.8	**005376** ●

Order example:
Tool set ID **426205** mounted on arbor ID **041125**, shank 25x60 mm.
When ordering, choose arbors with d = 20 mm and clamping length 55 mm.

● available ex stock
□ available at short notice
Instruction manual visit www.leitz.org



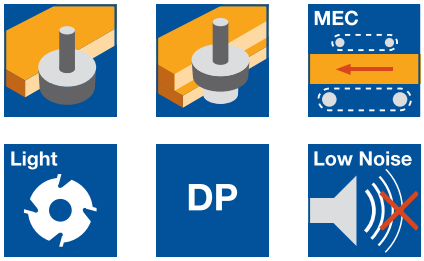

Jointing and rebating cutterhead WhisperCut

Application:
For tear-free and low noise jointing of the cutting surface.

Machine:
Stationary routers with/without CNC control, machining centres.

Workpiece material:
Chipboard and fibre materials (MDF, HDF etc.), uncoated, plastic coated, paper coated, fibre reinforced plastics (GFRP, CFRP etc.).

Technical information:
Cutterhead with DP knives with alternate shear angle for tear-free jointing edges and cutting surfaces. Noise reduced design with noise reduction of up to 5 dB(A) and highly efficient chip collection (>95%) by DFC. Significant weight reduction through lightweight aluminiuml tool body. Several times applicable through exchangeable knives. 0.6 mm resharpening area.

Diamaster WhisperCut jointing cutterhead
WM 230 2 01, WP 299 2

Tool Type	ABM mm	QAL	Z	ID
Cutterhead	70x33x20	DP	2/2/2	**192273** ●
Cutterhead mounted on arbor	1-part/HD28	DP	2/2/2	**192274** □

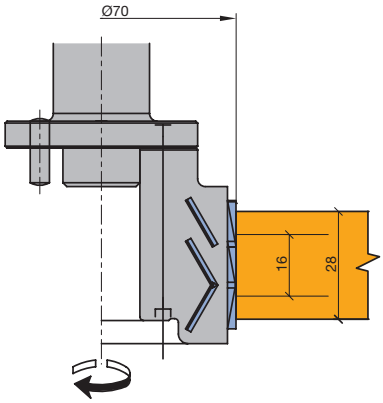

Diamaster WhisperCut jointing cutterhead

Application:
For tear-free and low noise rebating of the cutting surface.

Technical information:
Cutterhead with DP knives. For Tear-free rebates due to optimised knife arrangement with shear angle and separate bottom tip (spurs). Not suitable for jointing. Several times applicable through exchangeable knives.
Noise reduced design with noise reduction of up to 5 dB(A) and highly efficient chip collection (>95%) by DFC. Significant weight reduction through lightweight aluminium tool body.

Diamaster WhisperCut rebating cutterhead
WM 430 2 01, WP 499 2

Tool Type	ABM mm	QAL	Z	ID
Cutterhead	70.53x55x20	DP	3x5	**192275** ●
Cutterhead mounted on arbor	D70.53/SB55	DP	3x5	**192276** □

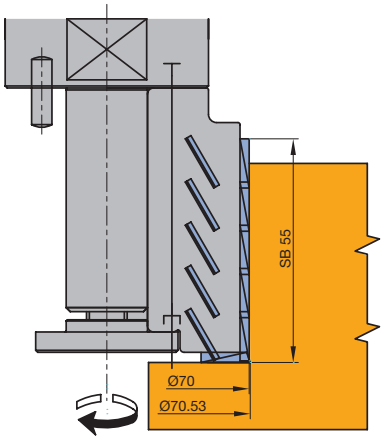

Diamaster WhisperCut rebating cutterhead

Unless stated otherwise, tools are right hand rotation.

Cutter arbor see section Clamping Systems.

Order example:
Tool set ID **192274** mounted on arbor ID **041126**, shank 25x60 mm.
In case of order select arbors with d = 20 mm and biggest clamping length of the respective type.

● available ex stock
□ available at short notice
Instruction manual visit www.leitz.org



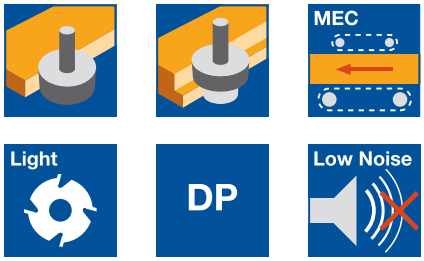

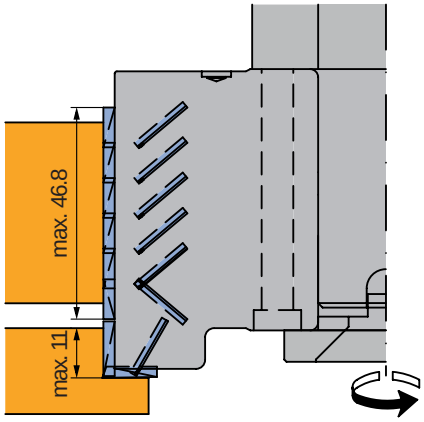

Jointing and rebating cutterhead WhisperCut EdgeExpert

Application:
Optimized for noise reduced rebating and jointing particularly for sensitive decorative papers, foil coatings and veneers.

Machine:
Stationary routers with/without CNC control, machining centres.

Workpiece material:
Chip and fibre boards (MDF etc.) raw, veneered, painted and coated; especially for plastic, paper, HPL and anti-fingerprint coatings. Also suitable for surfaces in mat, high gloss or with relief structures.

Technical information:
DP tipped cutterhead with alternate shear angle for tear-free jointing edges and cutting surface. With rebating knife for tear-free rebating edges (up to 11 mm rebating width). Increased shear angle for excellent edge quality on sensitive decorative papers, foil coatings and veneers. Noise reduced design with up to 5 dB(A) noise reduction. Significant weight reduction by using an aluminium alloy tool body. Carrier body for multiple use with exchangeable throw-away knives (not resharpenable).

Diamaster WhisperCut EdgeExpert
WP 299 2

Tool Type	ABM mm	QAL	Z	DRI	ID
Cutterhead mounted on arbor HSK-F 63	D125/SB59,8	DP	2/2	LH	**192310** □

● available ex stock
□ available at short notice
Instruction manual visit www.leitz.org









HW

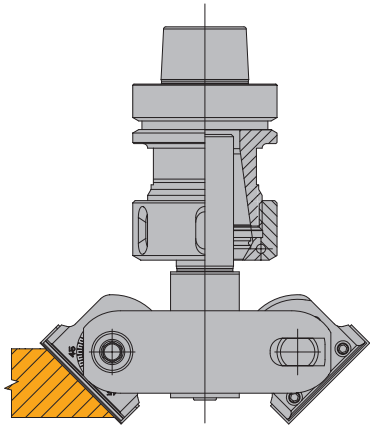

Bevelling from above

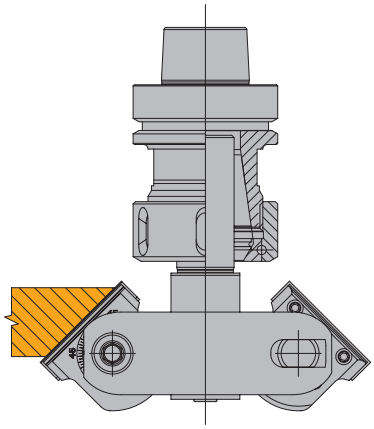

Bevelling from below

Variable angle cutterhead - turnblade design

Application:
For jointing and bevelling with adjustable bevel angle.

Machine:
Stationary routers with/without CNC control, machining centres.

Workpiece material:
Softwood and hardwood, laminated veneer lumber, plastomers, limited suitable for MDF and chipboad (uncoated or coated).

Technical information:
Knife holder swivelling adjustable from 0 - 90°. Quick and easy angle adjustment of common angles (15°, 30°, 45°, 60°) by additional locking positions in 15° steps. Free of marks cutting result due to 1-part, continuous cutting edge. Economical due to changeable tungsten carbide turnblades with two cutting edges. Optimized gullet design for improved chip removal.

Turnblade, adjustable bevel angle
WP 341 1 01

D mm	SB mm	S mm	DRI	ID
120	50	25x60	RH	**042864** ●
120	50	20x50	RH	**042865** □

RPM: n_{max} = 11000 min^{-1}

Spare knives:

Part-no.	BEZ	ABM mm	QAL	VE PCS	ID
1	Turnblade knife	50x12x1,5	HW-05F	10	**005086** ●

Spare parts:

Part-no.	BEZ	ABM mm	ID
2	Clamping wedge with pin	48x10,88x6	**009766** ●
3	Allen screw	M6x12	**006035**
	Allen key	SW 3	**005433** ●
	Allen key	SW 8, L 100	**005437** ●
	Setting gauge for knives	80x12x9,5	**005350** ●

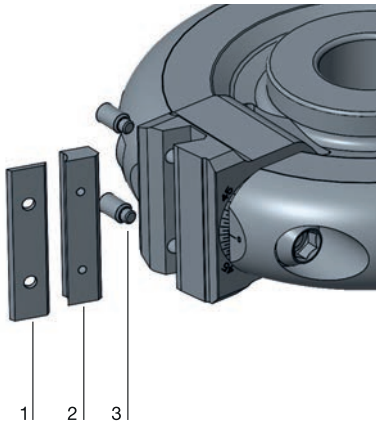









HW

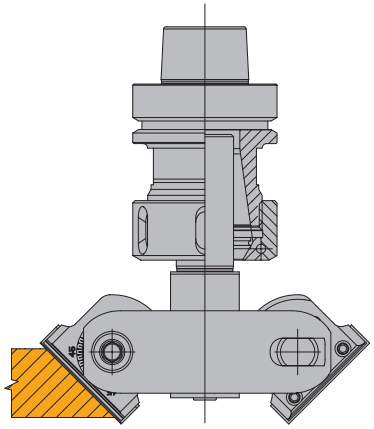

Bevelling from above

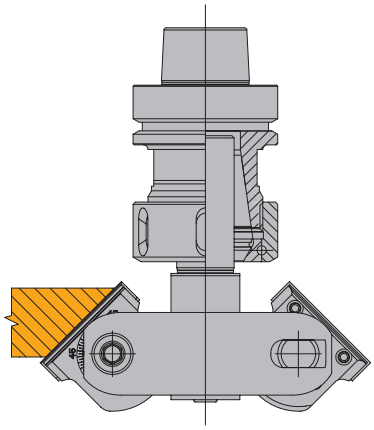

Bevelling from below

Variable angle cutterhead - HeliCut

Application:
For jointing and bevelling with adjustable bevel angle.

Machine:
Stationary routers with/without CNC control, machining centres.

Workpiece material:
Softwood and hardwood, laminated veneer lumber, plastomers, technical foams (XPS, PU), limited suitable for MDF and chipboard (uncoated or coated).

Technical information:
Knife holder can be swivelled steplessly on both sides from 0 - 65°. Quick and easy adjustment of conventional angles (15°, 30°, 45°, 60°) due to additional locking positions in 15° steps. Design with divided cutting edges and optimized gullet areas for low-noise working with low cutting pressure even at high cutting performance. Workpiece edges free of tear-out on both sides even in critical materials due to alternating shear angle. Cutting edges with particularly precise geometry and polishing for long tool life and machining of „soft“ materials. Economical due to partially exchangeable solid carbide blades with 4 cutting chamfers.

HeliCut, adjustable bevel angle
WP 341 1 01

D mm	SB mm	S mm	DRI	ID
120	55	25x60	RH	**042859** ●
120	55	20x50	RH	**042863** □

RPM: n_{max} = 11000 min^{-1}

Spare knives:

Part-no.	BEZ	ABM mm	ID
1	Turnblade knife	15x15x2,5	**009543** ●

Spare parts:

Part-no.	BEZ	ABM	ID
2	Countersink screw, Torx® 20	M5x12	**007898** ●
	Torx® key	Torx® 20	**006091** ●
	Allen key	SW 8, L 100	**005437** ●

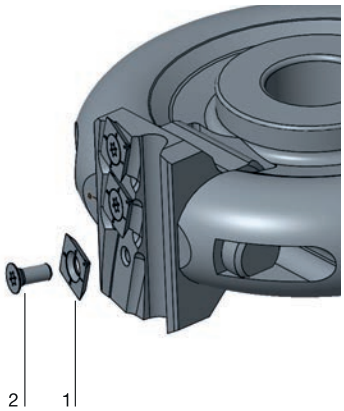

● available ex stock
□ available at short notice
Instruction manual visit www.leitz.org





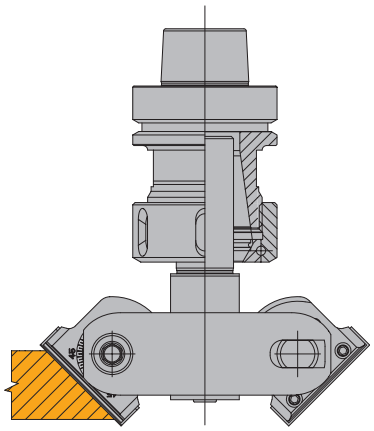

Bevelling from above

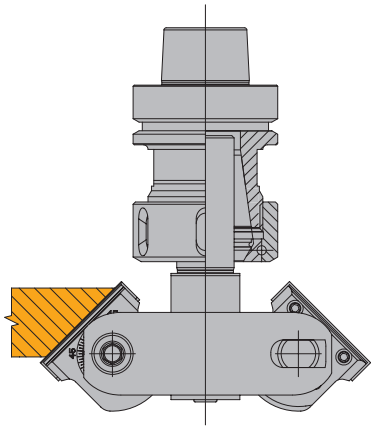

Bevelling from below

Variable angle cutterhead - WhisperCut

Application:
For jointing and bevelling with adjustable bevel angle.

Machine:
Stationary routers with/without CNC control, machining centres.

Workpiece material:
Hardwood, chip and fibre board (chipboard, MDF, HDF etc.), plastic coated, veneered etc., laminated veneer lumber (plywood, multiplex plywood etc.), solid surface material (Corian, Varicor etc.), fibre reinforced plastics (GRP, CFRP).

Technical information:
Knife holder swivelling adjustable from 0 - 65°. Quick and easy angle adjustment of common angles (15°, 30°, 45°, 60°) by additional locking positions in 15° steps. Workpiece edges tear-free on both sides due to alternatinv shear angle. Economical due to partial change of diamond cutting edges. Noice reduced design with optimized gullet design for improved chip removal.

WhisperCut, adjustable bevel angle
WP 341 1 01

D mm	SB mm	S mm	DRI	ID
120	55	25x60	RH	**042860** ●
120	55	20x50	RH	**042866** □

RPM: n_{max} = 11000 min^{-1}

Spare knives:

Part-no.	BEZ	ABM mm	ID
1	WhisperCut-knife SB14	14x14.2x4.3	**091074** ●

Spare parts:

Part-no.	BEZ	ABM mm	ID
2	Countersink screw, Torx® 20/59°	M5x11.5	**007899** ●
	Torx® key	Torx® 20	**006091** ●
	Allen key	SW 8, L 100	**005437** ●

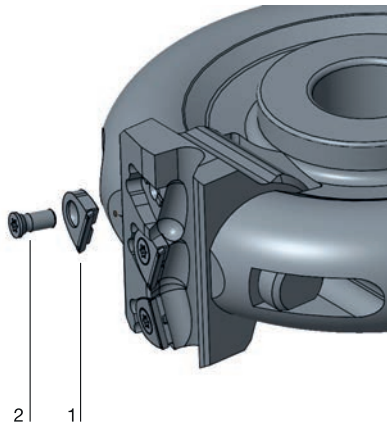

Working step/Application	Face milling, finish cutting.
Workpiece material [recommended cutting material]	Softwood and hardwood [HW]. Chipboard and fibre materials (MDF, HDF etc.), uncoated, plastic coated, veneered etc. [HW, DP]. Duromers [HW, DP]. Plastomers [HW, DP]. Solid surface material (Corian, Varicor etc.) [HW, DP].
Machine	Stationary routers with/without CNC control. Milling machines with spindles to mount shank tools.
Operation	For conventional and climb cut operations, limited chip removal.

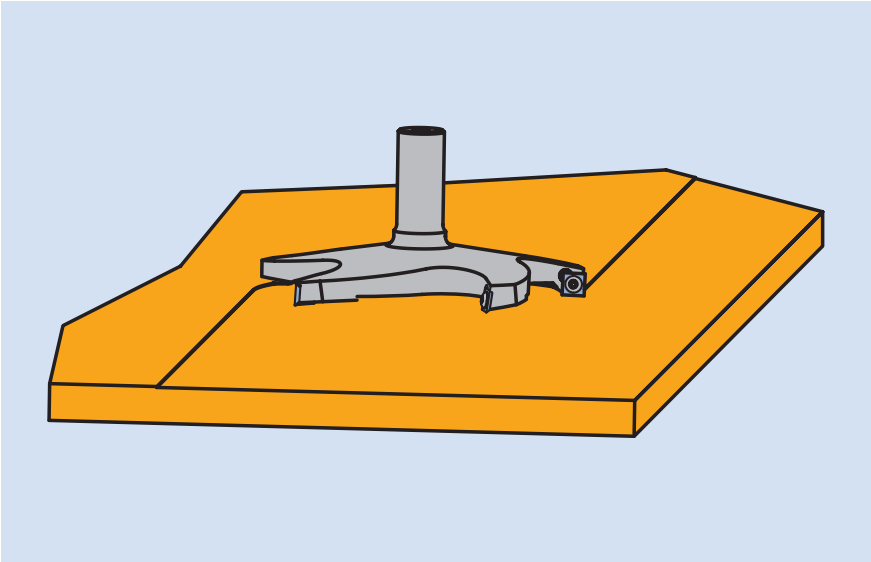

Face milling

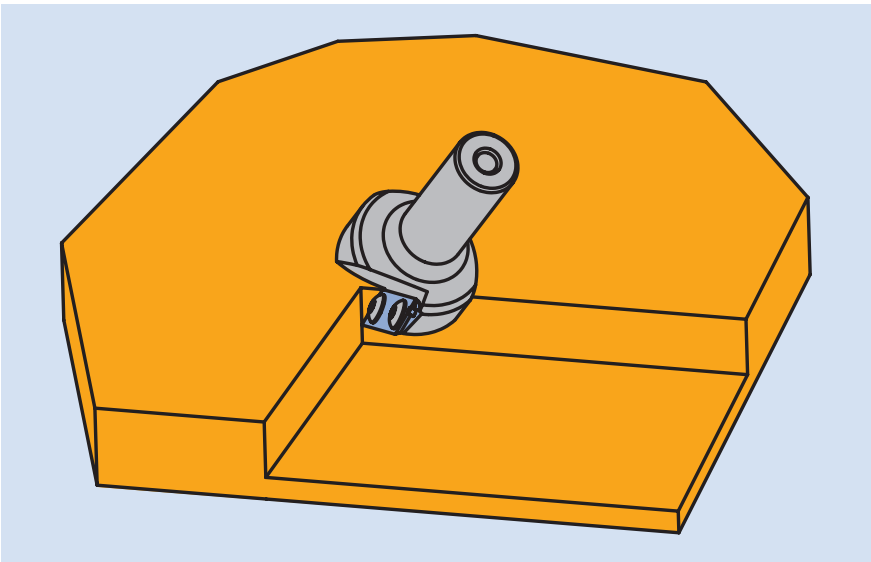

Finish cutting

Application parameters	**RPM/feed speed** The recommended RPM and feed speeds are detailed in the diagrams next the tool tables.
Information	Smooth cutting results can only be achieved with tools having a continuous cutting edge. In order to obtain a score-free finish during face milling, the machine spindle must be exactly vertical to the machine table. The larger the diameter of the planing cutter, the higher the risk of scoring and tool marks on the workpiece surface due to angular misalignment.
Workpiece clamping	Sufficient workpiece clamping is very important on stationary machines. Insufficient clamping can reduce both the cut quality and tool life considerably. Panels can be held in place with vacuum clamping, but sometimes additional mechanical clamping is required. Small and arched workpieces in particular require special jigs or clamping devices which must be made by the customer or sourced from specialist suppliers.





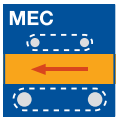



HW

Example

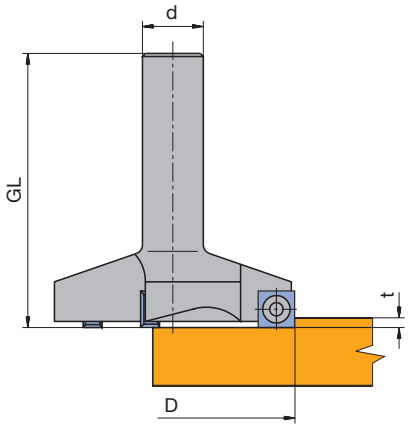

t max. = 10 mm

Surface planing of MDF spoilboards in nesting applications:
t = 0.3 - 1.5 mm
f_z = 0.3 - 0.8 mm
v_c = 58.6 - 70 m/s
(Attention: n max. must not be exceeded)

Example:
ID **041557**, v_c = 70 m/s, n = 7400 min^{-1}

Planing cutter - turnblade design HeliPlan

Application:
For surface planing of large workpieces and for cutting wide rebates in one operation.

Machine:
Stationary routers with/without CNC control, machining centres.

Workpiece material:
Softwood and hardwood, chipboard and fibre materials (MDF, HDF etc.), uncoated, plastic coated, veneered etc., laminated veneer lumber (plywood, multiplex plywood etc.), duromers, plastomers, solid surface material (Corian, Varicor etc.).

Technical information:
Cutting edge with shear angle; reversible and replaceable knives. D 135 and D 180 particularly suitable for planing MDF spoilboards in nesting applications. Excellent cutting result through optimized cutting geometry.

HW, Z 3, Z 4, Z 5
WL 400 2 01

D mm	GL mm	NL mm	S mm	Z	n_{max} min^{-1}	DRI	ID
80	90	15	20x50	3	14000	RH	**041554** ●
80	100	15	25x60	3	14000	RH	**041555** ●
135	90	15	25x60	4	10000	RH	**041556** ●
180	90	15	25x60	5	8400	RH	**041557** ●

Spare knives:

BEZ	ABM mm	QAL	VE PCS	ID
Turnblade knife	15x15x2,5	HW	10	**009535** ●

Spare parts:

BEZ	ABM mm	ID
Countersink screw, Torx® 20	M5x9	**114049** ●
Torx® key	Torx® 20	**006091** ●

● available ex stock
□ available at short notice
Instruction manual visit www.leitz.org





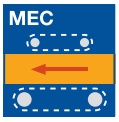



HW

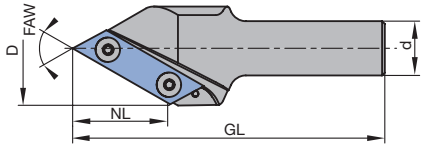

V-groove cutter

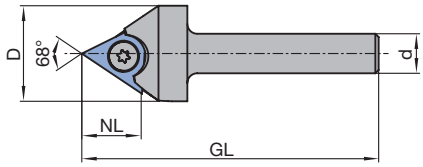

V-groove cutter 68° (ID **042932**)

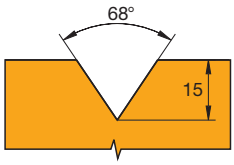

V-groove cutter in turnblade design with point 68° (ID **042932**)

Turnblade finishing cutter, Z 1

Application:
For machining V-groove profiles and for multi-purpose carving operations (decorative groove, 90° corner etc.).

Machine:
Stationary routers with/without CNC-control, milling machines with spindles to mount shank tools.

Workpiece material:
Softwood and hardwood, chipboard and fibre materials (MDF, HDF etc.), uncoated, plastic coated, veneered etc., laminated veneer lumber (plywood, multiplex plywood etc.).

Technical information:
Cutterhead with exchangeable turnblades. 2 or 3 (ID **042932**) performance times through turning the knife. Extra long design (ID **042937**) particularly suitable for carving operations on 5-axes machines.

HW, Z 1
WL 300 2

D mm	GL mm	NL mm	S mm	FAW °	Z	P	DRI	ID
29	90	18	12x58	68°	1	1	RH	**042932** ●
35	125	42	20x50	45°	1	2	RH	**042933** ●
42	115	35	20x50	60°	1	3	RH	**042934** ●
42	180	35	20x50	60°	1	3	RH	**042937** ●
54	100	27	20x50	90°	1	4	RH	**042935** ●
54	100	27	20x50	91°	1	5	RH	**042936** ●

Spare knives:

BEZ	ABM mm	P	QAL	ID
Turnblade knife triangular	22x19x2	1	HW	**009528** ●
Turnblade knife	59x12x1,5	2	HW	**602503** ●
Turnblade knife	49x12x1,5	3	HW	**602502** ●
Turnblade knife	39x12x1,5	4/5	HW	**602501** ●

Spare parts:

BEZ	ABM mm	P	ID
Countersink screw, Torx® 20	M5x5	1	**007445** ●
Oval head screw Torx® 15	M4x5	2-5	**007038** ●
Torx® key	Torx® 20	1	**117520** ●
Torx® key	Torx® 15	2-5	**005457** ●

Determination of the adjustment angle EW depending on the bevel angle FAW while finish cutting 90° internal corners.

FAW EW
45° = 32.77°
60° = 45.00°
68° = 52.26°

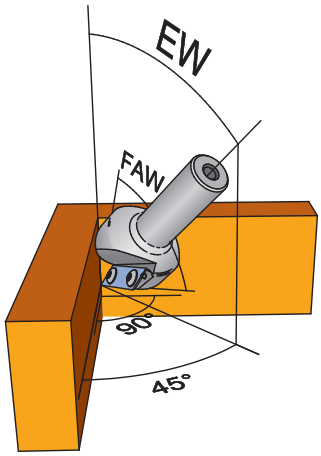




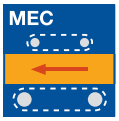



DP

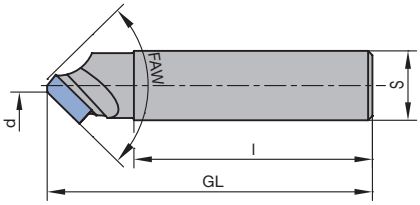

DP V-grooving cutter for composite panels

Application:
Routers for cutting V-grooves in composite panels for folding works.

Machine:
Stationary routers with/without CNC control, machining centres, milling machines with spindles to mount shank tools.

Workpiece material:
Composite panels based on thermoplastic cores with aluminium coverage on both sides (e.g. Alucobond®, Dibond® etc.).

Technical information:
DP edge with shear angle. Resharpenable 3 to 5 times with normal wear.

DP, Z 1
WO 311 2

D mm	d mm	NL mm	S mm	FAW °	DRI	ID
18	3	7,5	16x55	90°	RH	**191100**
20	2	3,7	16x55	135°	RH	**191106**

RPM: n = 18000 - 24000 min^{-1}

Application example:

Production of folding corners on composite panels.

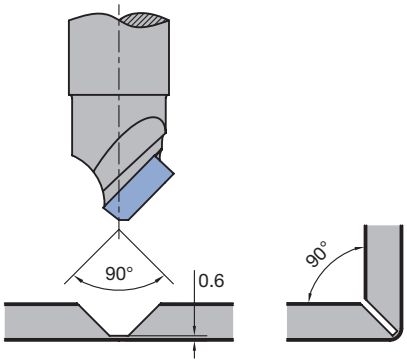



DP V-grooving cutter for compact laminate

Application:
For engraving and V-grooves in compact laminates.

Machine:
Stationary routers with/without CNC control, machining centres, milling machines with spindles to mount shank tools.

Workpiece material:
Laminated materials (HPL-compact laminate, Trespa, multiplex plywood).

Technical information:
Resharpenable up to 3 times with normal wear.

DP, Z 1
WO 531 2 51

D mm	NL mm	S mm	FAW °	DRI	ID
10	9	12x50	60	RH	**245503** ●

RPM: n = 24000 min^{-1} v_f = 2-5 m/min


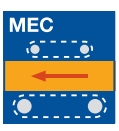



DP

● available ex stock
□ available at short notice
Instruction manual visit www.leitz.org

ProFix F cutterhead PF 25-15°



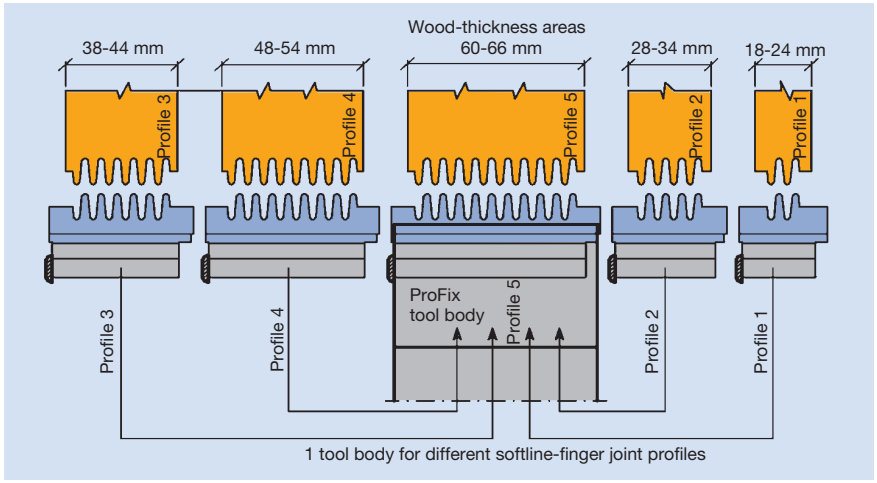

Working step/Application	For machining self-locking longitudinal joints for exactly measured workpieces, e.g. constructional finger joints, window and door profiles, mitred frames, arched joints, stair, furniture and shelf parts.
Cutting material	HS, HW (quality according to machined material).
Machine	Stationary routers with/without CNC, milling machines with spindles to mount tools with bore.
Tool design	ProFix tool body with bore for mounting on arbors. For ProFix finger joint knives without shear angle and with straight clearance.
RPM D_0 = diameter of the tool body	D_0 = 80 mm, n_{max} = 11000 min^{-1}. D_0 = 100 mm, n_{max} = 9000 min^{-1}.
Resharpening area	PF 25 = 4.5 mm.
Number of teeth/Cutting with	Z 2, SB max. = 80 mm.
Feed speed	Depends on the RPM, maximum 18 m min^{-1}.

	f_z [mm]
Softwood	0.30 – 0.40
Hardwood	0.40 – 0.50

$v_f = f_z \cdot n \cdot Z/1000$

Technical features	Tool body for resharpenable HS- or HW profile knives. Constant profile/diameter after resharpening. New and resharpened knives are always positioned and clamped at constant diameter by the ProFix clamping system. – Form and force knife clamping. – Knife clamping screws positioned behind the cutting edge, and in the dust protected area. – One tool body can be used for different finger and glue joint profiles of different cutting widths. – PF 25 with profile depth 25 mm.
General information	– Simple and exact knife replacement. – No setting gauges required. – Constant profile/diameter (no correction to the machine settings required). – Ready for use immediately after knife replacement, even on the machine. – Basic clearance 0.5 mm without side clearance. – Exact fitting to the workpiece by height adjusting the position of the profile to the middle of the wood (profile symmetry = HD/2).

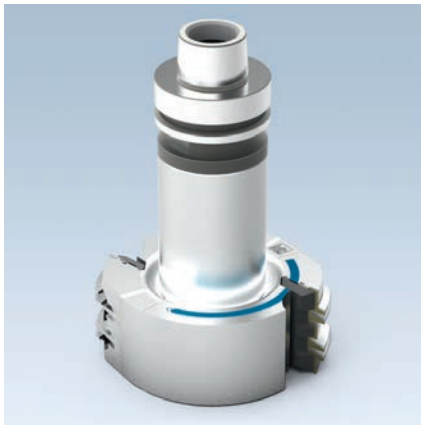

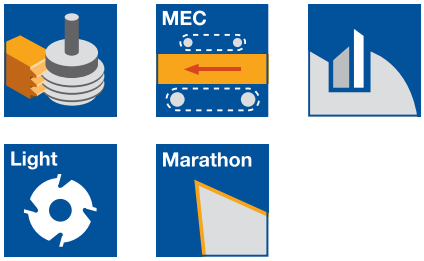

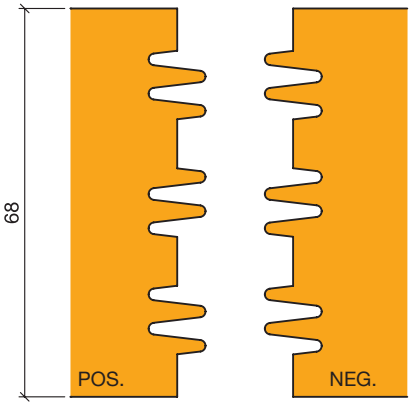

Positive and negative glue joint profile, combined in one tool

Profile cutterhead set - multi-purpose glue joint profile

Application:
For cutting longitudinal joints for dimensionally stable construction parts, windows and doors e.g. round arched joints, stairs and frame construction parts.

Machine:
Stationary routers with/without CNC control, machining centres, milling machines with spindles to mount shank tools.

Workpiece material:
Softwood and hardwood, modified timber for window construction, compound materials of solid wood and wood derived material, uncoated, plastic coated, veneered etc., laminated veneer lumber (plywood, multiplex plywood etc.).

Technical information:
Variable wood thickness (56/56/60/68/78/90/92/106/110 mm) through cutting processes in several passes (profile splitting).

ZL 10 mm, HD 56 - 110 mm
SG 699 2 53

Tool Type	DRI	Z	ID
Glue joint cutter set, positive and negative	RH	2	**955576** □

RPM: n_{max} = 12700 min^{-1}

Single tools
WE 600 2 53

Tool Type	ABM mm	Z	ID
Profile cutterhead	135x53x30	2	**125691** ●

Spare knives:

BEZ	ABM mm	QAL	ID
ProfilCut Q knife	53x20.5x2.4	MC	**413532**

Spare parts:

BEZ	ABM mm	ID
Clamping wedge profiled	50x25x8,27	**630190**
Clamping screw w. disc, Torx® 20	M5x18.5	**007446** ●
Torx® key	Torx® 20	**117503** ●

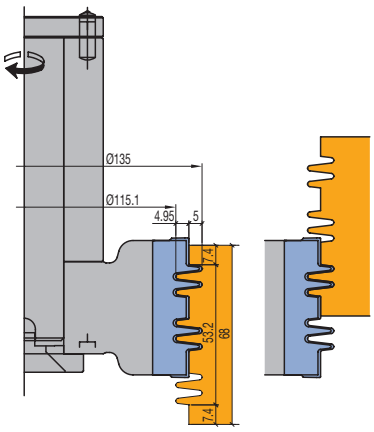

Glue joint profile positive, wood thickness 68 mm

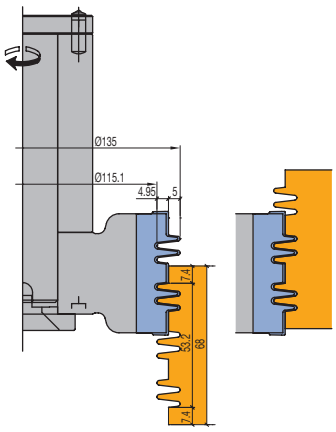

Glue joint profile negative, wood thickness 68 mm

● available ex stock
□ available at short notice
Instruction manual visit www.leitz.org

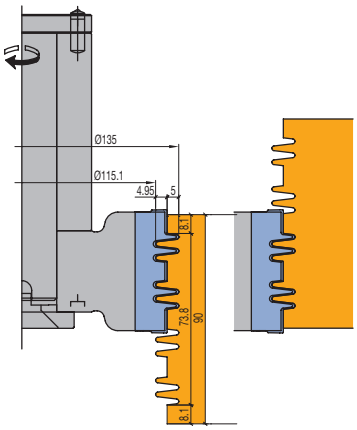

Glue joint profile positive,
wood thickness 90 mm

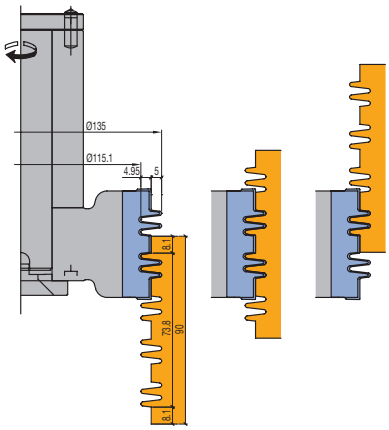

Glue joint profile negative,
wood thickness 90 mm

● available ex stock
□ available at short notice
Instruction manual visit www.leitz.org

Working step/Application	Profiling and rebating of internal doors.
Workpiece material	Softwood, hardwoods glulam, HDF coated or veneered.
Machine	Stationary routers and machining centres.
Profile cutterset for profiling and rebating internal doors Z 2	
Important ordering data	With adjustable cuttersets the depth of the rebate is set by the profile –> see profiles below. The same tool can machine doors of different thickness, but the rebate depth is constant.
Profile examples	

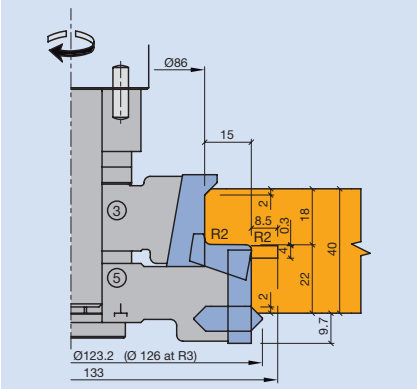

ID **426093**
Rebate depth 15 mm
Rebate width 22 mm
Turnblade knife tool set

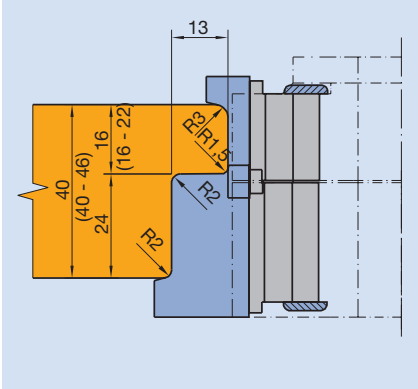

ID **023538** – P 1
Rebate depth 13 mm
Rebate width 24 mm
ProFix tool set




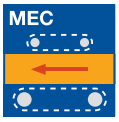







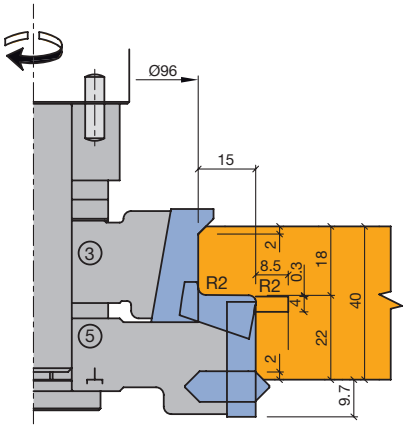

Example

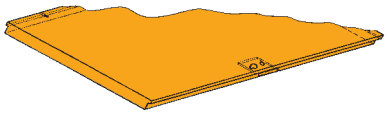



ID **008270** = R 3
ID **008307** = R 2
ID **008272** = R 1.5



ID **008275** = R 3



ID **008271** = R 3

Profile cutterhead set ProfilCut Q - door processing

Application:
For profiling and rebating internal single rebate doors, rebate depth 15 mm.

Machine:
Stationary routers with/without CNC control, machining centres, milling machines with spindles to mount shank tools.

Workpiece material:
Softwood and hardwood, compound materials of solid wood and wood derived materials, uncoated, plastic coated, veneered etc., laminated veneer lumber (plywood, multiplex plywood etc.).

Technical information:
Variable profile overlap by exchange profile edging knives.
Adjustable rebate dimensions: rebate width 22 mm, rebate depth 15 mm.
Seal groove profile by mounting grooving knives SB 4 mm. Constant tool diameter.

Single rebate 15 mm
SE 540 2 53, SG 599 2 53, WE 500 2 53

Tool Type	ABM mm	Tool no.	Z	ID
Profile cutterhead	104x30x20	3	2	**125659**
Profile cutterhead	126.2x35x20	5	2	**125660**
Tooling set with spacers, without arbor	126.2,d20,2-part	3/5	2	**426207**
Tool set mounted on arbor	D0=96;D=126,2; 2-part	3/5	2	**426208**

RPM: n_{max} = 13600 min^{-1}

Unless stated otherwise, tools are right hand rotation.
Cutter arbor see section Clamping Systems.

Spare knives:

Part-no.	BEZ	ABM mm	Tool no.	R mm	FAW °	QAL	VE PCS	ID
1	ProfilCut Q knife	30.2x14.1x2	3		45°	MC		**619334**
1	ProfilCut Q knife	30.2x14.2x2	3	1,5		MC		**619335**
1	ProfilCut Q knife	30.2x14.21x2	3	2		MC		**619336**
1	ProfilCut Q knife	30.2x14.22x2	3	3		MC		**619337**
1	ProfilCut Q knife	30.2x15.3x2	3	4		MC		**619338**
1	ProfilCut Q knife	30.2x15.31x2	3	5		MC		**619339**
1	ProfilCut Q knife, flute	30.2x14.1x2	3	3		MC		**619340**
1	ProfilCut Q knife	20.1x12.61x2	5	2		MC		**413046**
2	Turnblade knife Marathon	30x8x1,5	5			MC	10	**601634** ●
3	Edging knife	KM 11/0	5		45°	HW-F		**008268** ●
4	Turnblade grooving knife NA4	35.2x15x4	5			HW-F		**008317** ●

Spare parts:

Part-no.	BEZ	ABM mm	Tool no.	ID
5	Clamping wedge ProfilCut Q	27x20x8.27	3	**630017**
5	Clamping wedge profiled	17x24,7x8,27	5	**630261**
6	Clamping screw w. disc, Torx® 20	M5x18.5		**007446** ●
7	Torx® key	Torx® 20		**117503** ●
8	Countersink screw, Torx® 20	M6x0.5x4.9		**006243** ●
9	Clamping wedge	28x18.75x8.27	5	**630206** ●
	Magnetic setting gauge	0.3/0.8		**005376** ●

● available ex stock
□ available at short notice
Instruction manual visit www.leitz.org

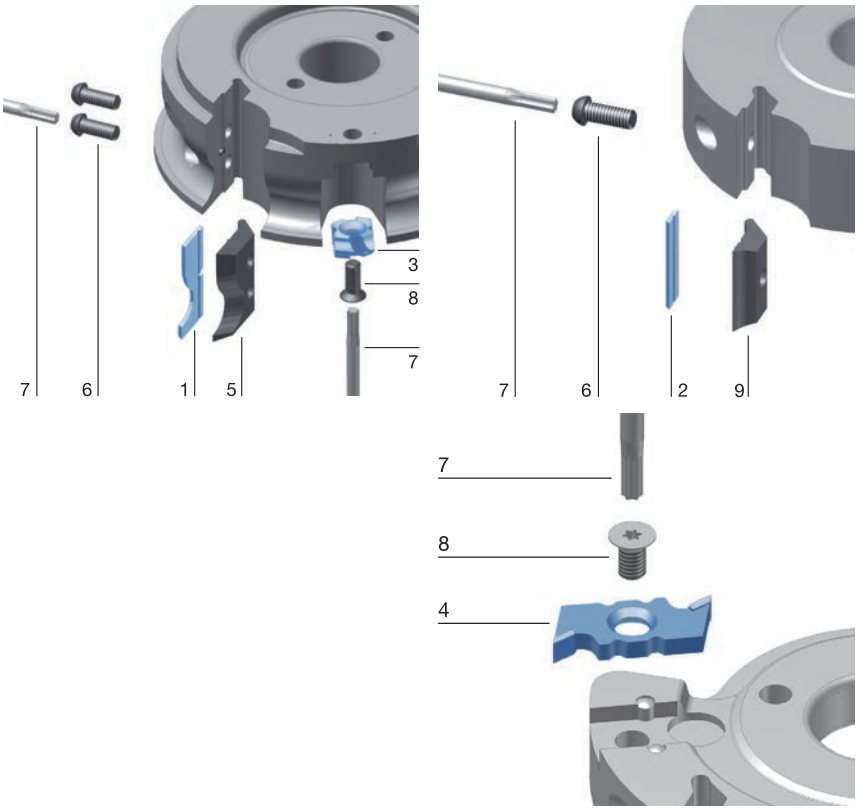
7
6
1
5
3
8
7
7
6
2
9
7
8
4

Working step/Application	Panel raising profiles.
Workpiece material	Softwood, hardwood and composite materials (HDF coated or veneered).
Machine	Stationary routers and machining centres.

Panel raising profile cutterset Z 2/2

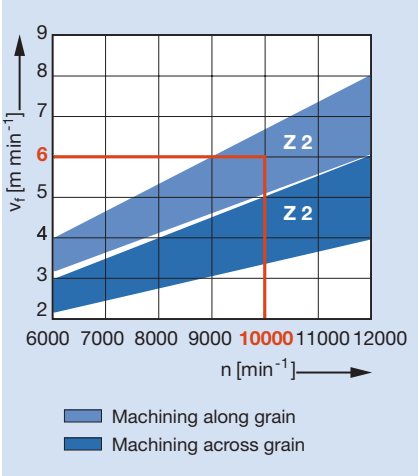



Diagram to determine feed speed v_f depending on RPM and direction of cut when machining solid wood panels (panel raising).

Profile examples

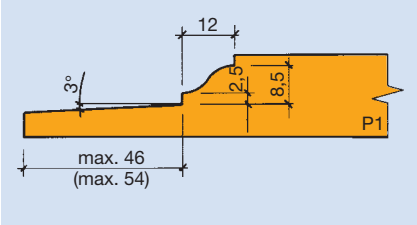

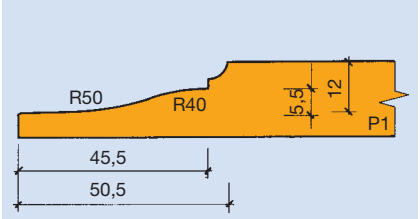



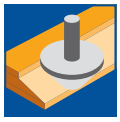

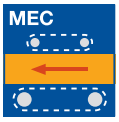







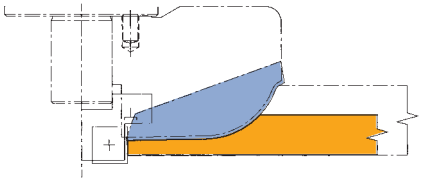

Example

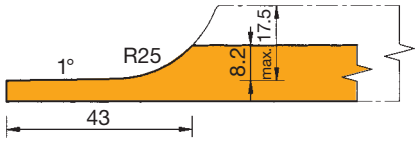

Profile cutterhead set ProfilCut Q - Panel raising

Application:
For panel raising profiles for framed doors, ceilings, wall coverings etc.

Machine:
Stationary routers with/without CNC control, milling machines with spindles to mount shank tools.

Workpiece material:
Softwood and hardwood.

Technical information:
Panel edge jointing by mounting an additional jointing cutterhead ID **041221**. Cutterhead with changeable knives and shear angle.

Panel raising depth max. 49 mm
SG 599 2 53, TR 811 0, WE 550 2 53

Tool Type	ABM mm	Z	n_{max} min^{-1}	ID
Cutterhead	132x43x20	2	13000	**125661**
Cover plate	46x9.5x20			**007925**
Cutterhead mounted on arbor	1-part			**426209**

Unless stated otherwise, tools are right hand rotation.
Cutter arbor see section Clamping Systems.

Spare knives:

Part-no.	BEZ	ABM mm	QAL	VE PCS	ID
	Turnblade knife	12x12x1.5	HW-05F	10	**005081** ●
1	ProfilCut Q knife	60x21,5x2	MC		**619343**

Spare parts:

Part-no.	BEZ	ABM mm	ID
2	Clamping wedge profiled	57x32x7,25	**630192**
3	Clamping screw w. disc, Torx® 20	M5x18.5	**007446** ●
4	Torx® key	Torx® 20	**117503** ●
	Oval head screw Torx® 15	M4x6	**006225** ●
	Torx® key	Torx® 15	**117507** ●

Jointing
WW 200 2 NN

Tool Type	ABM mm	QAL	Z	ID
Jointing cutterhead	30/46x12/22.5x20	HW	2	**041221**

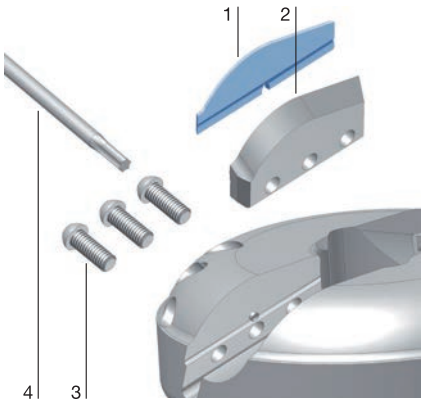



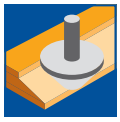

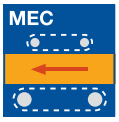







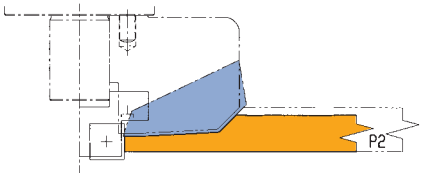

Example

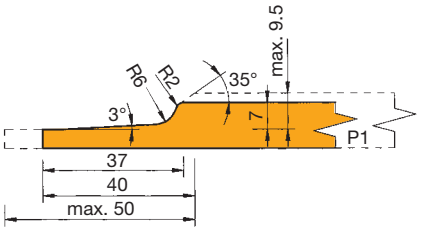

P1

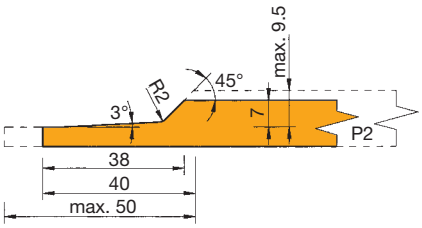

P2

Profile cutterhead set ProfilCut Q - Panel raising

Application:
For panel raising profiles for framed doors, ceilings, wall coverings etc.

Machine:
Stationary routers with/without CNC control, milling machines with spindles to mount shank tools.

Workpiece material:
Softwood and hardwood.

Technical information:
Panel edge jointing by mounting an additional jointing cutterhead ID **041221**.
Cutterhead with changeable knives and shear angle. Profile can be changed by replacing the knives.

Panel raising depth max. 40 / 50 mm with/without jointing
SG 599 2 53, WE 550 2 53

Tool Type	P	ABM mm	QAL	Z	n_{max} min^{-1}	ID
Cutterhead	1	110x40/40x20	MC	2	15600	**125662** ●
Cutterhead mounted on arbor		1-part	MC		15600	**426210** □

Unless stated otherwise, tools are right hand rotation.
Cutter arbor see section Clamping Systems.

Spare knives:

Part-no.	BEZ	P	ABM mm	QAL	VE PCS	ID
	Turnblade knife		12x12x1.5	HW-05F	10	**005081** ●
1	ProfilCut Q knife	1	50x15,5x2	MC		**619344**
1	ProfilCut Q knife	2	50x15,56x2	MC		**619345**

Spare parts:

Part-no.	BEZ	ABM mm	ID
2	Clamping wedge profiled	47x26x8,27	**630167**
3	Clamping screw w. disc, Torx® 20	M5x18.5	**007446** ●
4	Torx® key	Torx® 20	**117503** ●
	Oval head screw Torx® 15	M4x6	**006225** ●
	Torx® key	Torx® 15	**117507** ●

Jointing
WW 200 2 NN

Tool Type	ABM mm	QAL	Z	ID
Jointing cutterhead	30/46x12/22.5x20	HW	2	**041221**

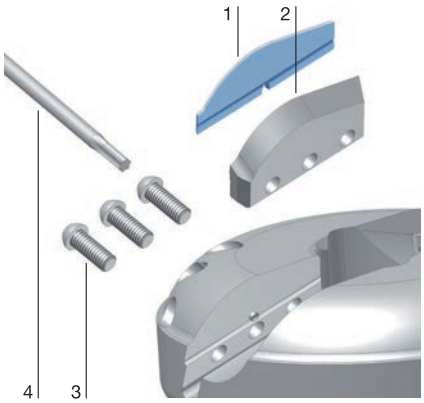

● available ex stock
□ available at short notice
Instruction manual visit www.leitz.org



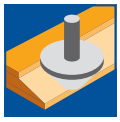

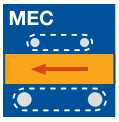







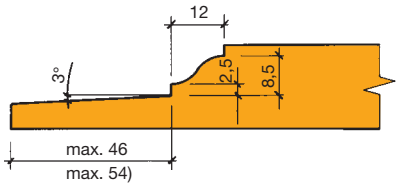

P1



P2



P3



P4



P5

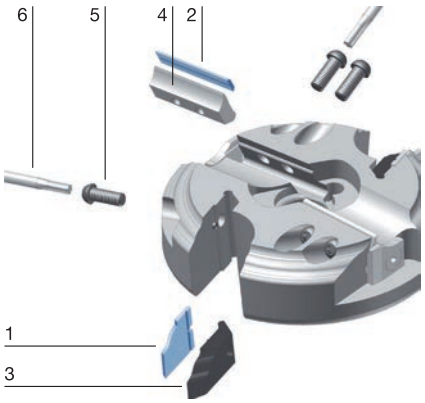

Profile cutterhead set ProfilCut Q - Panel raising

Application:
For panel raising profiles for framed doors, ceilings, wall coverings etc.

Machine:
Stationary routers with/without CNC control, milling machines with spindles to mount shank tools.

Workpiece material:
Softwood and hardwood.

Technical information:
Panel edge jointing by mounting an additional jointing cutterhead ID **041221**.
Cutterhead with changeable knives and shear angle. Profile can be changed by replacing the knives.

Panel raising depth max. 54 mm
SG 599 2 53, WE 550 2 53

Tool Type	P	ABM mm	QAL	Z	n_{max} min^{-1}	ID
Cutterhead	1	124x20/36x20	MC	2/2	13800	**125663**
Cutterhead mounted on arbor	1	1-part	MC	2/2	13800	**426211**

Unless stated otherwise, tools are right hand rotation with profile P1.
Cutter arbor see section Clamping Systems.

Spare knives:

Part-no.	BEZ	P	ABM mm	QAL	VE PCS	ID
	Turnblade knife		12x12x1.5	HW-05F	10	**005081** ●
1	ProfilCut Q knife	1	20x27x2	MC		**619346**
1	ProfilCut Q knife	2	20x27x2	MC		**619347**
1	ProfilCut Q knife	3	20x27x2	MC		**619348**
1	ProfilCut Q knife	4	20x27x2	MC		**619349**
1	ProfilCut Q knife	5	20x27x2	MC		**619350**
2	Turnblade knife Marathon		40x8x1,5	MC	10	**601608** ●

Spare parts:

Part-no.	BEZ	P	ABM mm	ID
3	Clamping wedge profiled	1-5	17x35x8.27	**630194**
4	Clamping wedge		38x18,75x8,27	**630209** ●
5	Clamping screw w. disc, Torx® 20		M5x18.5	**007446** ●
6	Torx® key		Torx® 20	**117503** ●
	Oval head screw Torx® 15		M4x6	**006225** ●
	Torx® key		Torx® 15	**117507** ●
	Cover plate		46x9.5x20	**007925**

Jointing
WW 200 2 NN

Tool Type	ABM mm	QAL	Z	ID
Jointing cutterhead	30/46x12/22.5x20	HW	2	**041221**



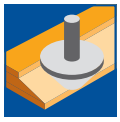

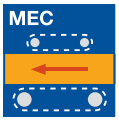







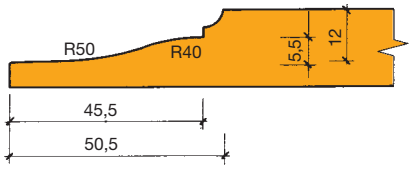

P1



P2



P3



P4



P5

Profile examples

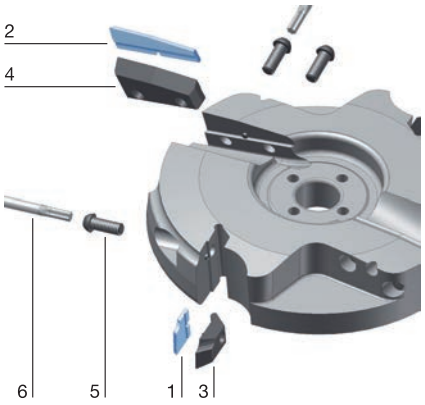

Profile cutterhead set ProfilCut Q - Panel raising

Application:
For panel raising profiles for framed doors, ceilings, wall coverings etc.

Machine:
Stationary routers with/without CNC control, milling machines with spindles to mount shank tools.

Workpiece material:
Softwood and hardwood.

Technical information:
Panel edge jointing by mounting an additional jointing cutterhead ID **041221**.
Cutterhead with changeable knives and shear angle. Profile can be changed by replacing the knives.

Panel raising depth max. 50 mm
SG 599 2 53, WE 550 2 53

Tool Type	P	ABM mm	QAL	Z	n_{max} min^{-1}	ID
Cutterhead	1	131x20/36x20	MC	2/2	13100	**125664**
Cutterhead mounted on arbor	1	1-part	MC	2/2	13100	**426212**

Unless stated otherwise, tools are right hand rotation with profile P1.
Cutter arbor see section Clamping Systems.

Spare knives:

Part-no.	BEZ	P	ABM mm	QAL	VE PCS	ID
	Turnblade knife		12x12x1.5	HW-05F	10	**005081** ●
1	ProfilCut Q knife	1	20x16x2	MC		**619351**
1	ProfilCut Q knife	2	20x16x2	MC		**619352**
1	ProfilCut Q knife	3	20x16x2	MC		**619353**
1	ProfilCut Q knife	4	20x16x2	MC		**619354**
1	ProfilCut Q knife	5	20x16x2	MC		**619355**
2	ProfilCut Q knife (pan.rais.)		50x11.68x2	MC		**619356**

Spare parts:

Part-no.	BEZ	P	ABM mm	ID
3	Clamping wedge profiled	1-5	17x25x8,27	**630168**
4	Clamping wedge profiled		47x23,2x7,25	**630169**
5	Clamping screw w. disc, Torx® 20		M5x18.5	**007446** ●
6	Torx® key		Torx® 20	**117503** ●
	Oval head screw Torx® 15		M4x6	**006225** ●
	Cover plate		46x9.5x20	**007925**

Jointing
WW 200 2 NN

Tool Type	ABM mm	QAL	Z	ID
Jointing cutterhead	30/46x12/22.5x20	HW	2	**041221**

● available ex stock
□ available at short notice
Instruction manual visit www.leitz.org



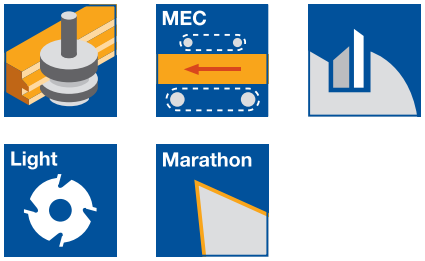

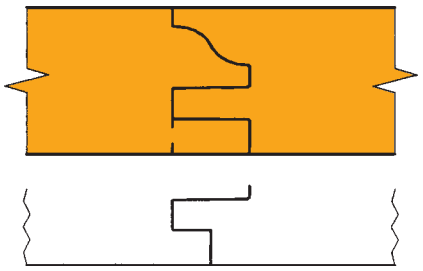

P1

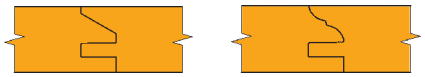

P2 P3

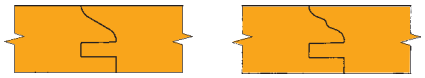

P4 P5

Profile examples

Profile cutterhead set ProfilCut Q - Door frame

Application:
For profiles and counter profiles in solid wood frame furniture doors.

Machine:
Stationary routers with/without CNC control, milling machines with spindles to mount shank tools.

Workpiece material:
Softwood and hardwood.

Technical information:
3 tools with 5 profiles for single side profiled frames and inserted or beaded panels. Additional profiles by remounting the single tools.

Frame profile one side, 12 mm tongue
AG 341 2 53, SE 640 2 53

Tool Type	Tool no.	Z	n_{max} min^{-1}	ID
Profile set	1	2	15700	**426213**
Counter profile set	2/3	2/2	15700	**426214**
Tool set profile and counter profile mounted on arbor				**426215**

Frame profile one side, 12 mm rebate
AG 341 2 53, SE 640 2 53

Tool Type	Tool no.	Z	n_{max} min^{-1}	ID
Profile set	1/3	2/2	15700	**426216**
Counter profile set	2/4	2/2	15700	**426217**
Tool set profile and counter profile mounted on arbor				**426218**

Frame profile one side, 6 mm tongue
AG 341 2 53, SE 640 2 53

Tool Type	Tool no.	Z	n_{max} min^{-1}	ID
Profile set	1/5	2/2	15700	**426219**
Counter profile set	2/5	2/2	15700	**426220**
Tool set profile and counter profile mounted on arbor				**426221**

Single tools
WE 500 2 53, WW 210 2, WW 410 2

Tool Type	ABM mm	Tool no.	Z	V	ID
Profile cutterhead	109,1x30x20	1	2		**125698**
Profile cutterhead	109,0x20x20	2	2		**125699**
Rebating cutterhead	109,0x15x20	3	2	2	**125700** ●
Jointing cutterhead	85x15x20	4	2		**125701** ●
Rebating cutterhead	97x15x20	5	2	2	**125702** ●

Cutter arbor see section Clamping Systems.
Tools supplied with profile 1 unless ordered otherwise.

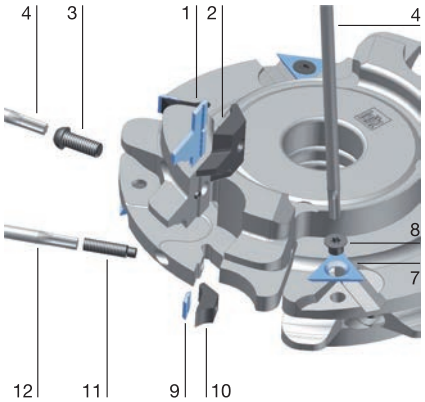

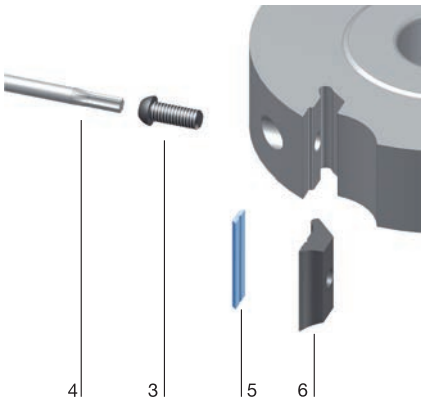

Spare knives:

Part-no.	BEZ	ABM mm	P	Tool no.	QAL	VE PCS	ID
1	ProfilCut Q knife	30x23,2x2	1	1	MC		**619357**
1	ProfilCut Q knife	30x23,2x2	2	1	MC		**619358**
1	ProfilCut Q knife	30x23,2x2	3	1	MC		**619359**
1	ProfilCut Q knife	30x23,2x2	4	1	MC		**619360**
1	ProfilCut Q knife	30x23,2x2	5	1	MC		**619361**
1	ProfilCut Q knife	20x23x2	1	2	MC		**619362**
1	ProfilCut Q knife	20x23x2	2	2	MC		**619363**
1	ProfilCut Q knife	20x23x2	3	2	MC		**619364**
1	ProfilCut Q knife	20x23x2	4	2	MC		**619365**
1	ProfilCut Q knife	20x23x2	5	2	MC		**619366**
7	Turnblade spur VS2	19x19x2		3/5	HW-F	10	**005115** ●
5	Turnblade knife Marathon	14,7x8x1,5		3-5	MC	10	**601603** ●

Spare parts:

Part-no.	BEZ	ABM mm	P	Tool no.	ID
2	Clamping wedge profiled	27x29x8,27	1-5	1	**630170**
2	Clamping wedge profiled	17x29x8,27	1-5	2	**630171**
3	Clamping screw w. disc, Torx® 20	M5x18.5			**007446** ●
4	Torx® key	Torx® 20			**117503** ●
8	Countersink screw, Torx® 20	M5x8.5			**007808** ●
6	Clamping wedge	13x18,75x8,27		3-5	**630203** ●
	Magnetic setting gauge	0.3/0.8			**005376** ●

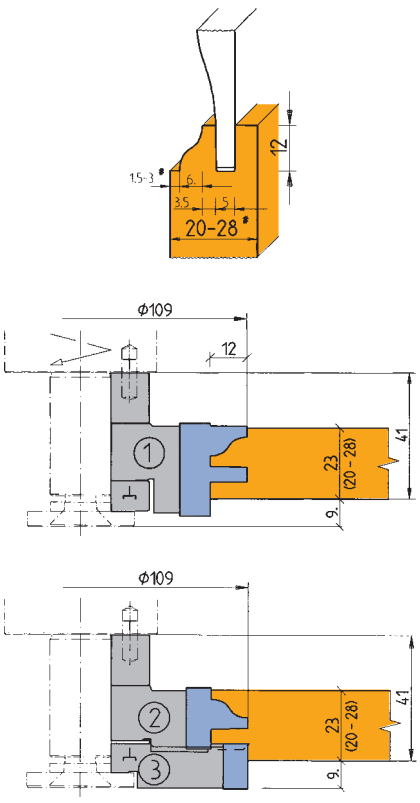

Tongue 12 mm, inserted panel

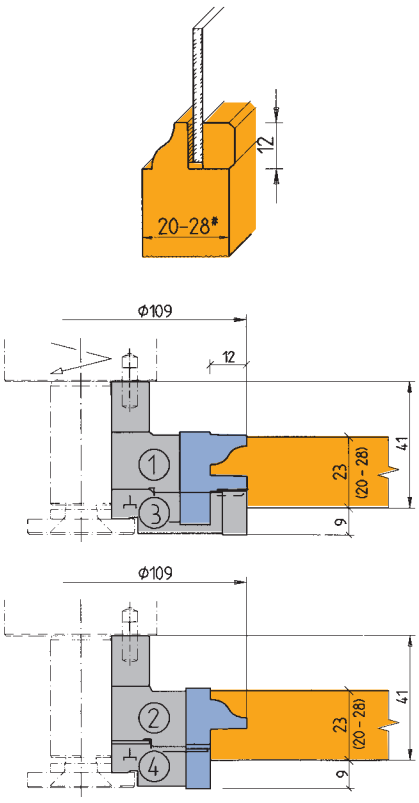

Rebate 12 mm, beaded panels

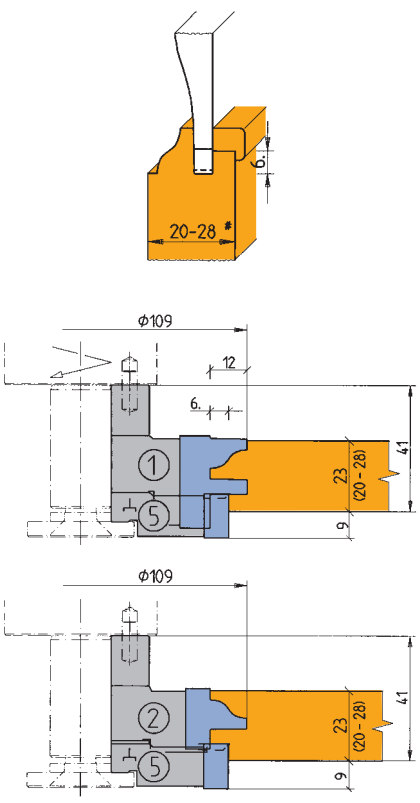

Tongue 6 mm, inserted and beaded panels

● available ex stock
□ available at short notice
Instruction manual visit www.leitz.org




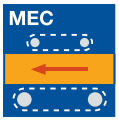







P1


P2


P3


P4


P5

Profiles

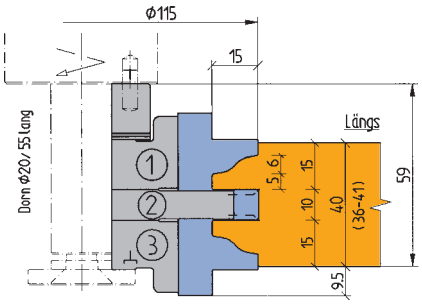

Frame profiled on two sides - longitudinal profile

Profile cutterhead set ProfilCut Q - Door frame

Application:
For profiles and counter profiles in solid wood frame furniture doors.

Machine:
Stationary routers with/without CNC control, milling machines with spindles to mount shank tools.

Workpiece material:
Softwood and hardwood.

Technical information:
Tools with 5 profiles for double sided profiled frames and inserted or beaded panels. Additional tools available for changing from frames with profiles on both sides to frames with profiles on one side.

Frame profile two sides, 15 mm tongue
AG 341 2 53, SE 640 2 53

Tool Type	Tool no.	Z	V	n_{max} min^{-1}	ID
Profile set	1/2/3	2	2	14900	**426222**
Counter profile set	1/3	2		14900	**426223**
Tool set profile and counter profile mounted on arbor					**426224**

Frame profile one side, 15 mm rebate
AG 341 2 53, SE 640 2 53

Tool Type	Tool no.	Z	V	n_{max} min^{-1}	ID
Profile set	3/5	2	2	14900	**426225**
Counter profile set	1/4	2		14900	**426226**
Tool set profile and counter profile mounted on arbor					**426227**

Frame profile two sides, 15 mm tongue, profile and counter profile
SE 640 2 53, SG 699 2 53

Tool Type	Tool no.	Z	V	n_{max} min^{-1}	ID
Profile and counter profile set	3/1/2/3	2	2	14900	**426228**
Tool set profile and counter profile mounted on arbor				14900	**426229**

Additional tool (conversion from tongue 15 mm to rebate 15 mm)
WW 211 2, WW 410 2

Tool Type	Tool no.	Z	V	n_{max} min^{-1}	ID
Profile	5	2	2	14900	**125728**
Counter profile	4	2		14900	**125703** ●

Cutter arbor see section Clamping Systems.

Wood thickness:
Frame profile two sides HD 36 - 41 mm
Frame profile one side HD 20 - 49 mm

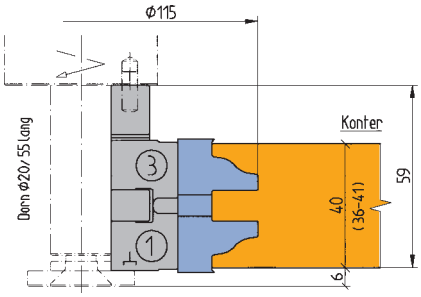

Frame profiled on two sides - counter profile

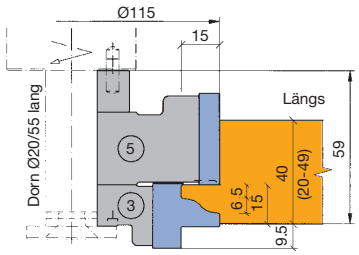

Frame profiled on one side - longitudinal profile

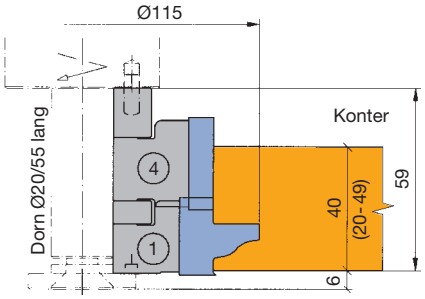

Frame profiled on one side - counter profile

Spare knives:

Part-no.	BEZ	ABM mm	P	Tool no.	QAL	VE PCS	ID
1	ProfilCut Q knife	25x27x2	1	3	MC		**619291**
1	ProfilCut Q knife	25x27x2	2	3	MC		**619292**
1	ProfilCut Q knife	25x27x2	3	3	MC		**619293**
1	ProfilCut Q knife	25x27x2	4	3	MC		**619294**
1	ProfilCut Q knife	25x27x2	5	3	MC		**619295**
1	ProfilCut Q knife	25x27x2	1	1	MC		**619296**
1	ProfilCut Q knife	25x27x2	2	1	MC		**619297**
1	ProfilCut Q knife	25x27x2	3	1	MC		**619298**
1	ProfilCut Q knife	25x27x2	4	1	MC		**619299**
1	ProfilCut Q knife	25x27x2	5	1	MC		**619300**
7	Turnblade spur VS2	19x19x2		2	HW-F	10	**005115** ●
9	Turnblade knife Marathon	9,7x8x1,5		2	HW-30F MC	10	**601601** ●
5	Turnblade knife Marathon	35x8x1,5		5	HW-30F MC	10	**601607** ●
5	Turnblade knife Marathon	30x8x1,5		4	MC	10	**601606** ●

Spare parts:

Part-no.	BEZ	ABM mm	Tool no.	ID
2	Clamping wedge profiled	22x30x8,27	3	**630172**
2	Clamping wedge profiled	22x30x8,27	1	**630173**
3	Clamping screw w. disc, Torx® 20	M5x18.5		**007446** ●
4	Torx® key	Torx® 20		**117503** ●
8	Countersink screw, Torx® 20	M6x0.5x4.9		**006243** ●
10	Clamping wedge	9x18,75x8,27	2	**009764** ●
6	Clamping wedge	28x18.75x8.27	4	**630206** ●
6	Clamping wedge	33x18,75x8,27	5	**630208** ●
11	Allen screw with shank, Torx® 15	M5x20		**007380** ●
12	Torx® key	Torx® 15		**117507** ●
	Magnetic setting gauge	0.3/0.8		**005376** ●

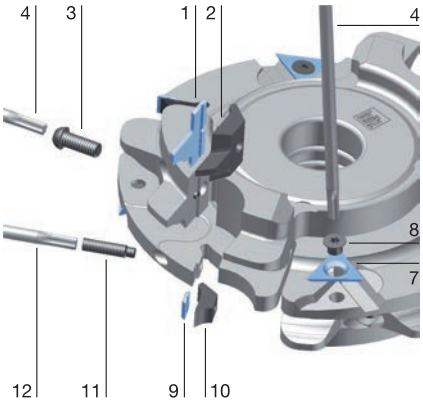

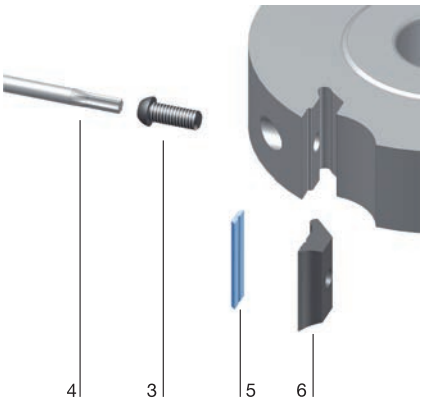

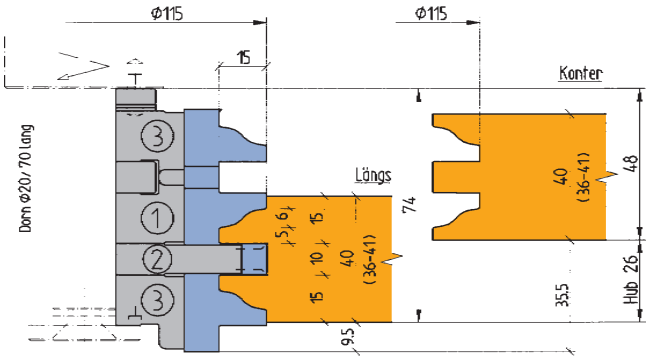

Frame profiled on two sides
Tool sets for profile and counter profile mounted on arbor

● available ex stock
□ available at short notice
Instruction manual visit www.leitz.org



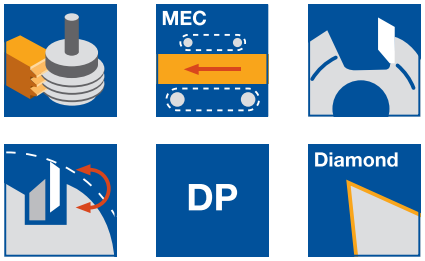

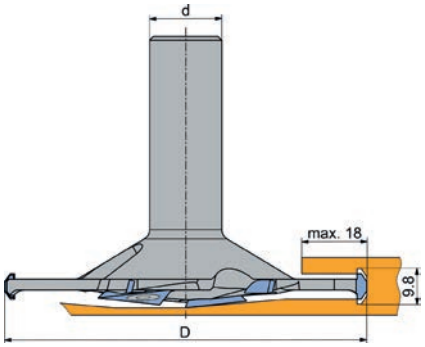

Profile cutter for Clamex® P-System® connector

Profile cutter Lamello® Clamex® P-System®

Application:
Router for milling the profile groove for Lamello® Clamex® P-System® connectors on nesting machines made by Holz-Her.

Machine:
Routing machines with CNC control, machining centres.

Workpiece material:
Chipboard and fibre materials (chipboard, MDF, HDF etc.), raw, plastic-coated, veneered etc., glued wood and laminated wood (plywood, Multiplex etc.).

Technical information:
Profile and basic cutting edges in PCD, boring edges in reversible knife design with diamond coating. For use exclusively on Holz-Her machines with existing software module (subject to licence). Not resharpenable.

Z 2+2 / 1+1
WO 532 2

D mm	GL mm	NL mm	S mm	DRI	ID
100,4	75	7	20x53	RH	**191127** ●

RPM: n_{max} = 18000 min^{-1}

Drill for access hole D = 6 mm: ID 034116.

Spare knives:

BEZ	ABM mm	QAL		ID
Turnblade spur	19x19x2	DP	*	**006607** ●

DP* = Diamond coating

Spare parts:

BEZ	ABM mm	ID
Countersink screw Torx® 20	M5x6	**114050** ●
Torx® key	Torx® 20	**117520** ●

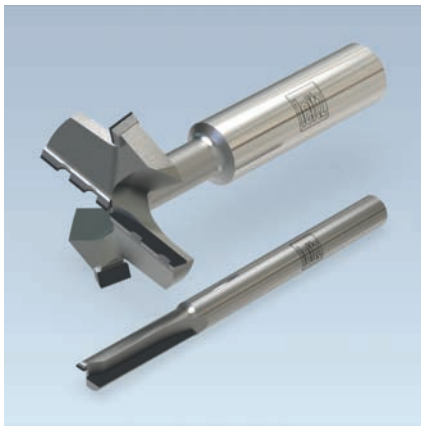



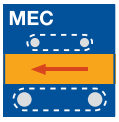



DP

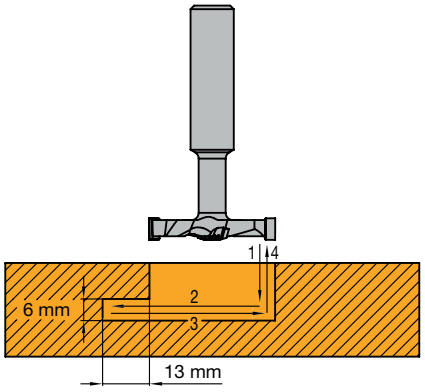

Horizontal grooves (T-slots)

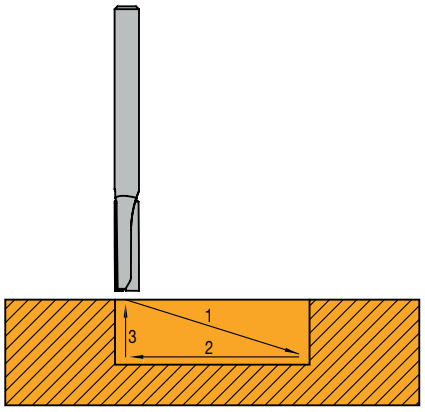

Vertical grooves

Diamaster tools for FixChip® connector system

Application:
Router cutters for milling horizontal and vertical grooves for FixChip® connectors on nesting machines.

Machine:
Routing machines with CNC control, machining centres.

Workpiece material:
Chipboard and fibre materials (chipboard, MDF, HDF etc.), raw, plastic-coated, veneered etc., glued wood and laminated wood (plywood, Multiplex etc.).

Technical information:
Profile, plunge and basic cutting edges in PCD. Cannot be resharpened due to accuracy of fit.

Horizontal grooves (T-slots) - Diamaster T-groove router
WO 120 2 50

D	GL	NL	S	Z	DRI	ID
mm	mm	mm	mm			
35	65	6	12x40	2+2	RH	**191130** ●

RPM: 18000 min^{-1}
Feed rate plunging: 1.5 - 2 m/min
Feed rate milling: 3 - 4 m/min

Technical information:
Counter-rotating PCD cutting edges for high processing quality in various materials. Can be resharpened up to 3 times.

Vertical grooves - Diamaster router
WO 120 2 50

D	GL	NL	S	Z	DRI	ID
mm	mm	mm	mm			
6	60	22	6x30	2	RH	**191131** ●

RPM: 18000^{-1}
Feed rate milling: 3 - 6 m/min

Note:
Drills for screw connection D = 3 mm:
Through-hole drill ID **035492** and **035493**
Dowel hole drill ID **033788** and **033789**

● available ex stock
□ available at short notice
Instruction manual visit www.leitz.org

Working step/Application

Profiling (jointing, bevelling, rounding, panel raising and decorative grooves).

Workpiece material [recommended cutting material]

Softwood and hardwood [HS, HW].
Chipboard and fibre materials (MDF, HDF etc.), uncoated, plastic coated, veneered etc. [HW].
Plywood [HW].
Duromers [HW].
Plastomers [HS, HW].
Solid surface material (Corian, Varicor etc.) [HW].
Decorative laminates (HPL-compact laminate, Trespa etc.) [HW].
Non-ferrous metal (Aluminium, copper etc.) [HS, HW].

Machine

Stationary routers with/without CNC control, CNC machining centres.
Milling machines with spindles to mount shank tools.

Operation

For conventional and climb cut operations.

Recommendation

Solid wood along grain: climb cut.
Solid wood across grain: conventional cut.

Technical features

Cutterhead with replaceable and shapeable knives or ProfilCut Q system cutterheads for machining panels and decorative grooves.

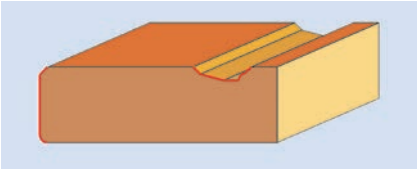

Example

Application parameters

RPM/feeds
Recommended cutting speeds v_C and chip load f_z for multi-purpose cutterheads.

	Cutterhead HS v_c [m/s]	**Cutterhead HW v_c [m/s]**
Softwood	50 – 80	60 – 90
Hardwood	40 – 60	50 – 80
Chipboard/MDF	–	60 – 80
Plywood	–	60 – 80
Plastic coated board	–	40 – 60

	Cutterhead HS/HW f_z [mm]
Solid wood along grain	0.3 – 0.5
Solid wood across grain	0.25 – 0.35
Chipboard/MDF	0.3 – 0.5
Plywood	0.25 – 0.35

Calculation formula: $v_f = f_z \cdot n \cdot Z / 1000$

Workpiece clamping

Sufficient workpiece clamping is very important on stationary machines.

Insufficient clamping can reduce both the cut quality and tool life considerably. Panels can be held in place with vacuum clamping, but sometimes additional mechanical clamping is required.

Small and arched workpieces in particular require special jigs or clamping devices which must be made by the customer or sourced from specialist suppliers.





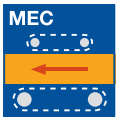







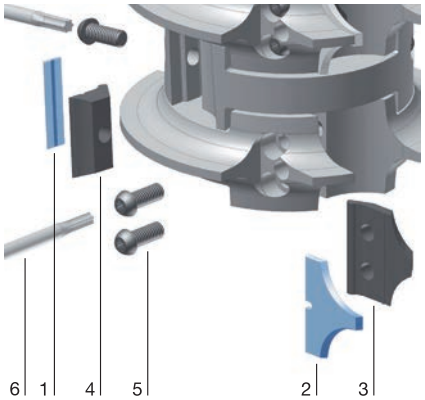

Profile cutterhead set ProfilCut Q

Application:
Multi-purpose tool set for bevelling and rounding, optional jointing of the workpiece edge.

Machine:
Stationary routers with/without CNC control, milling machines with spindles to mount shank tools.

Workpiece material:
Softwood and hardwood.

Technical information:
By combining jointing and bevelling or rounding cutterheads several different profiles and wood thicknesses can be covered. Different radii or bevel profile knives can be mounted in one cutterhead.

Jointing, rounding or bevelling tool
SG 599 2 53

Tool Type	R mm	BEM	n_{max} min^{-1}	ID
Rounding		No. of tools 1	15400	**426230** □
Jointing rounding		No. of tools 2	15400	**426231** □
Rounding jointing rounding	3-8	No. of tools 3	15400	**426232** □
Rounding jointing rounding	3-8 10-15	No. of tools 3	14900	**426233** □
Rounding rounding	3-8 10-15	No. of tools 2	15400	**426234** □

Spare knives:

Part-no.	BEZ	ABM mm	Tool no.	R mm	FAW °	QAL	VE PCS	ID
1	Turnblade knife Marathon	14,7x8x1,5	6			MC	10	**601603** ●
1	Turnblade knife Marathon	19,7x8x1,5	3			MC	10	**601604** ●
1	Turnblade knife Marathon	30x8x1,5	4			MC	10	**601606** ●
1	Turnblade knife Marathon	40x8x1,5	5			MC	10	**601608** ●
1	Turnblade knife Marathon	50x8x1,5	7			MC	10	**601610** ●
2	ProfilCut Q knife	20x18x2	1	3		MC		**619246**
2	ProfilCut Q knife	20x18x2	1	4		MC		**619247**
2	ProfilCut Q knife	20x18x2	1	5		MC		**619248**
2	ProfilCut Q knife	20x18x2	1	6		MC		**619249**
2	ProfilCut Q knife	20x18x2	1	7		MC		**619250**
2	ProfilCut Q knife	20x18x2	1	8		MC		**619251**
2	ProfilCut Q knife	20x18x2	1	5	45°	MC		**619253**
2	ProfilCut Q knife	35x25,2x2	2	10		MC		**619384**
2	ProfilCut Q knife	35x25,2x2	2	11		MC		**619385**
2	ProfilCut Q knife	35x25,2x2	2	12		MC		**619386**
2	ProfilCut Q knife	35x25,2x2	2	13		MC		**619387**
2	ProfilCut Q knife	35x25,2x2	2	14		MC		**619388**
2	ProfilCut Q knife	35x25,2x2	2	15		MC		**619389**
2	ProfilCut Q knife	35x25,2x2	2	9	45°	MC		**619390**

Spare parts:

Part-no.	BEZ	ABM mm	Tool no.	ID
3	Clamping wedge	17x23x8,27	1	**630140**
3	Clamping wedge	32x29,8x8,27	2	**630166**
4	Clamping wedge	18x18,75x8,27	3	**630204** ●
4	Clamping wedge	28x18.75x8.27	4	**630206** ●
4	Clamping wedge	38x18,75x8,27	5	**630209** ●
4	Clamping wedge	13x18,75x8,27	6	**630203** ●
4	Clamping wedge	48x18,75x8,27	7	**630211** ●
5	Clamping screw w. disc, Torx® 20	M5x18.5		**007446** ●
6	Torx® key	Torx® 20		**117503** ●
	Allen key	SW 4		**005445** ●

Part nos. 1 and 2 - ProfilCut Q and turnblade knives - see detailed information on the following pages.

● available ex stock
□ available at short notice
Instruction manual visit www.leitz.org

ID. 426230

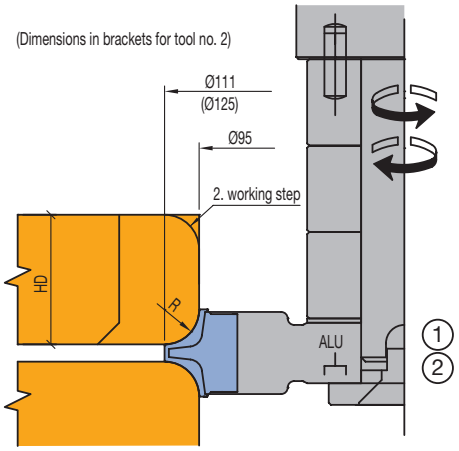

Order example:
-Combination ID 426230
-Profile description top down RL
RL R5
-Cutter arbor from Lexicon / Larbor length 70mm / Larbor Ø 20mm

Spacers / tool weight

Tool No.	1	2
Spacer "X"	3x20.0 1x1.0	2x20.0 1x5.0 1x1.0
Weight (without cutter arbor)	0.8 kg	1.0 kg

ID. 426231

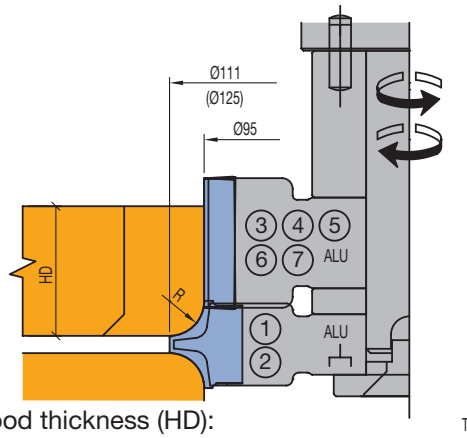

Order example:
-Combination ID 426231
-Profile description top down RL
jointingSB20/R5
-Cutter arbor from Lexicon / Larbor length 70mm / Larbor Ø 20mm

Wood thickness (HD):

Table value for bevel knives: R = 5 (9) x 45°

Tool-combination	1 3	1 4	1 5	1 6	1 7	2 3	2 4	2 5	2 6	2 7
max. wood thickness	19 + R	29 + R	39 + R	14 + R	49 + R	19 + R	29 + R	39 + R	14 + R	49 + R
min. wood thickness	-	-	-	-	-	-	-	-	-	-
Spacer set "X"	50.0	40.0	30.0	55.0	20.0	35.0	25.0	15.0	40.0	5.0
Weight (without cutter arbor)	0.9 kg	1.0 kg	1.0 kg	1.1 kg	1.1 kg	1.1 kg	1.1 kg	1.2 kg	1.2 kg	1.2 kg

ID. 426232

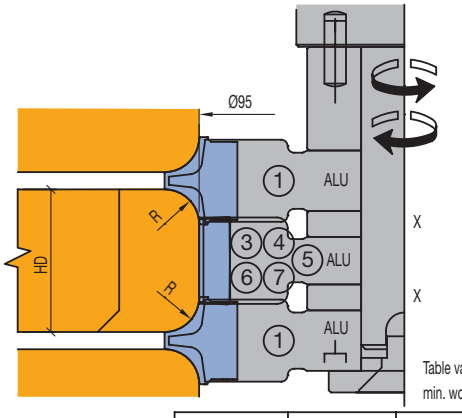

At clamping height 75 mm no combination of tool no. 2 is possible.

Order example:
-Combination ID 426232
-Profile description top down RL
R5/jointingSB20/R5
-Cutter arbor from Lexicon / Larbor length 70mm / Larbor Ø 20mm

Table value for bevel knives:
min. wood thickness are with bevel 5 (9) x45° calculated

Tool-combination	1 3 1	1 4 1	1 5 1	1 6 1	1 7 1
max. wood thickness	17 + R + R	27 + R + R	37 + R + R	13 + R + R	47 + R + R (but max. 57)
min. wood thickness	21	31	41	16	51
Spacer set "X"	2x18.0	2x13.0	2x8.0	2x20.5	2x3.0
Weight (without cutter arbor)	1.0 kg	1.0 kg	1.1 kg	1.1 kg	1.1 kg

ID. 426233

Order example:
-Combination ID 426233
-Profile description top down RL
R12/jointingSB20/R5
-Cutter arbor from Lexicon / Larbor length 70mm / Larbor Ø 20mm

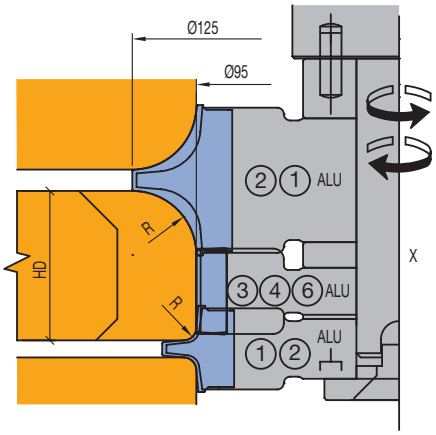

At clamping height 75 mm no combination of tool no. 2 and 2 or 5 and 7 is possible.
For combination no. 1 and 1 see ID 426232

Tool-combination	1 3 2	1 4 2	1 6 2
max. wood thickness	17 + R + R	27 + R + R	13 + R + R
min. wood thickness	28	38	23
Spacer set "X"	2x10.5	2x5.5	2x13.0
Weight (without cutter arbor)	1.2 kg	1.3 kg	1.3 kg

Table value for bevel knives: R = 5 (9) x 45°
min. wood thickness are with bevel 5 (9) x45° calculated

ID. 426234

(Dimensions in brackets for tool no. 2)

Order example:
-Combination ID 426234
-Profile description top down RL
R5/R5
-Cutter arbor from Lexicon / Larbor length 70mm / Larbor Ø 20mm

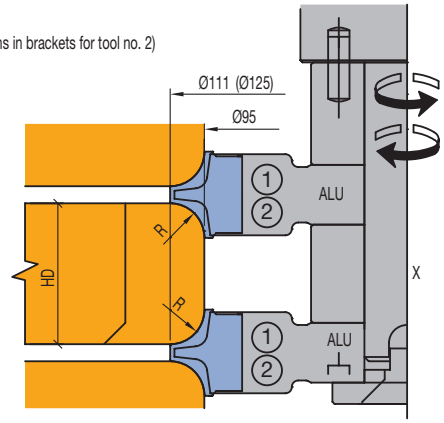

Tool-combination	1 1	2 2	1 2
max. wood thickness	57	41	49
min. wood thickness	R + R but min. 10	R + R but min. 24	R + R but min. 17
Spacer set "X"	47	17	32
Weight (without cutter arbor)	0.9 kg	1.3 kg	1.1 kg

Table value for bevel knives: R = 5 (9) x 45°
min. wood thickness are with bevel 5 (9) x 45° calculated

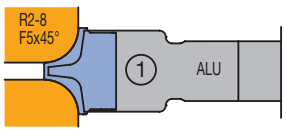

Spare part:
Clamping wedge 630140

WZ 125665 ME 619245	R2	WZ 125669 ME 619249	R6
WZ 125666 ME 619246	R3	WZ 125670 ME 619250	R7
WZ 125667 ME 619247	R4	WZ 125671 ME 619251	R8
WZ 125668 ME 619248	R5	WZ 125672 ME 619253	F5x45°

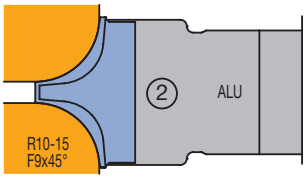

Spare part:
Clamping wedge 630166

WZ 125673 ME 619384	R10	WZ 125677 ME 619388	R14
WZ 125674 ME 619385	R11	WZ 125678 ME 619389	R15
WZ 125675 ME 619386	R12	WZ 125679 ME 619390	F9x45°
WZ 125676 ME 619387	R13		

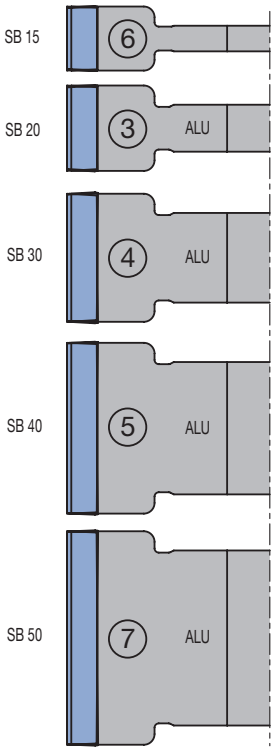

WZ 125695 ME 601603 (VE 10 pcs.)	Wedge 630203
WZ 125692 ME 601604 (VE 10 pcs.)	Wedge 630204
WZ 125693 ME 601606 (VE 10 pcs.)	Wedge 630206
WZ 125694 ME 601608 (VE 10 pcs.)	Wedge 630209
WZ 125696 ME 601610 (VE 10 pcs.)	Wedge 630211

● available ex stock
□ available at short notice
Instruction manual visit www.leitz.org

ID. **426230**

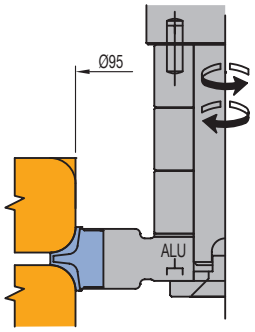

ID. **426231**

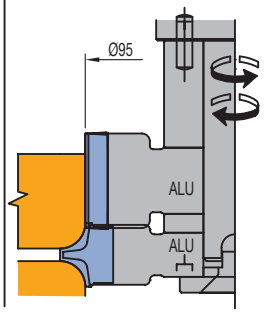

ID. **426232**

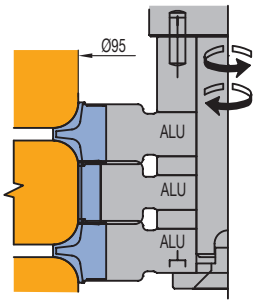

ID. **426233**

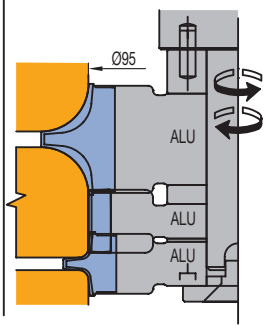

ID. **426234**

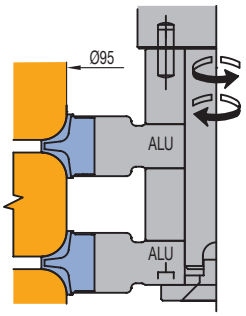





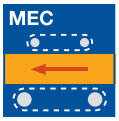



HW

Profile cutterhead - radii / bevel profile

Application:
For rounding workpieces with different radii or 45° bevelling.

Machine:
Stationary routers with/without CNC control, milling machines with spindles to mount shank tools.

Workpiece material:
Softwood and hardwood, chipboard and fibre materials (MDF, HDF etc.), uncoated, plastic coated, veneered etc., laminated veneer lumber (plywood, multiplex plywood etc.), duromers, plastomers, solid surface material (Corian, Varicor etc.).

Technical information:
Multi-purpose use on top or bottom of workpiece up to HD approx. 35 mm. Suitable for cutting narrow internal radii on workpieces. One tool body can be used for radii from 2 to 5 mm and 45° bevels.

Cutterhead with set of radius profile knives
AG 740 2

Tool Type	D mm	S mm	Z	DRI	ID
1 tool body + 2 pcs. R2, R3, R4, R5 knives each in wooden box	40	16x60	2	RH	**043105** ●

Spare knives:

BEZ	ABM mm	QAL	R mm	FAW °	ID
Exchange knife	16x17,5x2	HW	2,0		**005132** ●
Exchange knife	16x17,5x2	HW	3,0		**005133** ●
Exchange knife	16x17,5x2	HW	4,0		**005134** ●
Exchange knife	16x17,5x2	HW	5,0		**005135** ●
Exchange knife	16x17,5x2	HW		45	**009525** ●

Spare parts:

BEZ	ABM mm	ID
Oval head screw Torx® 15	M4x6	**006225** ●
Torx® key	Torx® 15	**005457** ●

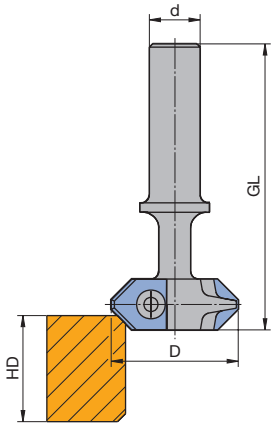

Machining chamfers on the top side of the workpiece

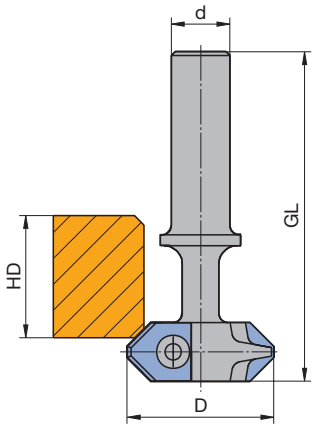

Machining chamfers on the bottom side of the workpiece

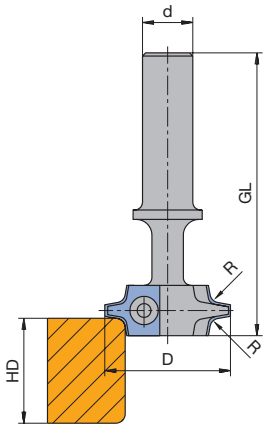

Machining radius on the top side of the workpiece

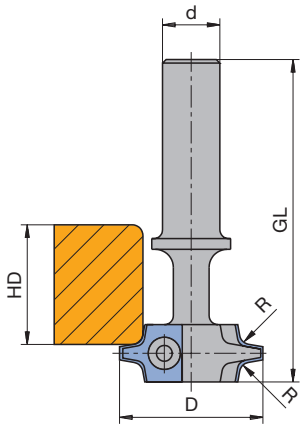

Machining radius on the bottom side of the workpiece

● available ex stock
□ available at short notice
Instruction manual visit www.leitz.org





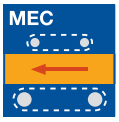



HW



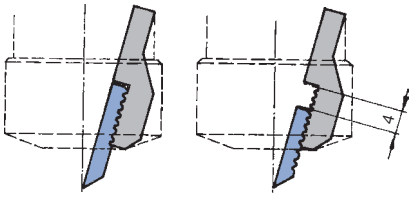

1 2

1 = Knife as new
2 = Maximum adjustment of resharpened knife

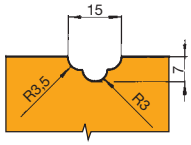

P1

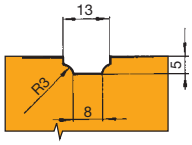

P2

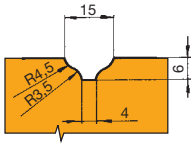

P3

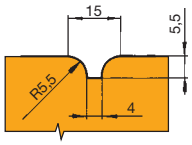

P4

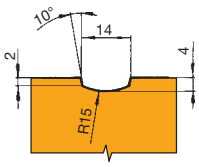

P5

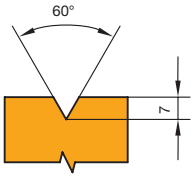

P6

Profile examples

Multi-purpose profile cutterhead, Z 1

Application:
For cutting decorative grooves and internal profiles.

Machine:
Stationary routers with/without CNC-control, milling machines with spindles to mount shank tools.

Workpiece material:
Softwood and hardwood, chipboard and fibre materials (MDF, HDF etc.), uncoated, plastic coated, veneered etc., laminated veneer lumber (plywood, multiplex plywood etc.).

Technical information:
Cutterhead with resharpenable profile knife. Form fit, play-free knife mounting by precise serration. Different profiles in one tool body. Special profiles can be ground into the blank knife on request and available with DP tipping for long performance time in wood derived materials.

For profiles, Z 1, cutting in end grain
WP 500 1

D mm	GL mm	SB mm	S mm	Z	DRI	ID
15	88,5	7	16x50	1	RH	**042930** ●

Sales unit consisting of cutterhead with clamping wedge and nut without HW knife blank.

Spare knives:

Part-no.	BEZ	P	ABM mm	QAL	ID
1	Profile knife	1	20,7x9x3	HW	**006945** ●
1	Profile knife	2	20,7x9x3	HW	**006946** ●
1	Profile knife	3	20,7x9x3	HW	**006947** ●
1	Profile knife	4	20,7x9x3	HW	**006948** ●
1	Profile knife	5	20,7x9x3	HW	**006949** ●
1	Profile knife V-groove	6 (60°)	20,7x9x3	HW	**006950** ●
1	Back serrated blank		9x21,7x3	HW	**007490** ●

Spare parts:

Part-no.	BEZ	ABM mm	ID
2	Clamping wedge with back serration	9x27,4x7	**009584** ●
3	Cylindrical screw with ISK	M4x16	**005847** ●
	Sickle spanner	34/36	**005498** ●
	Allen key	SW 3	**005433** ●

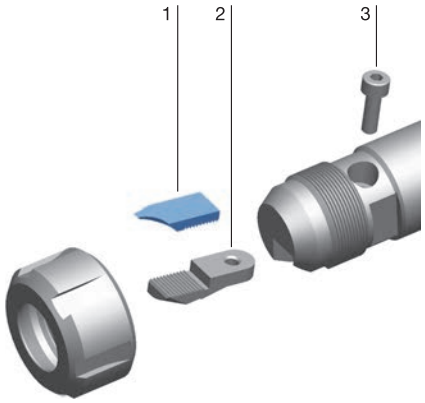





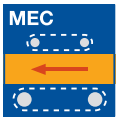



HW

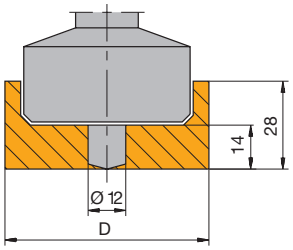

Profile area

Multi-purpose profile cutterhead, Z 2

Application:
For cutting decorative grooves, internal profiles and combined external and internal profiles.

Machine:
Stationary routers with/without CNC control, milling machines with spindles to mount shank tools.

Workpiece material:
Softwood and hardwood, chipboard and fibre materials (MDF, HDF etc.), uncoated, plastic coated, veneered etc., laminated veneer lumber (plywood, multiplex plywood etc.).

Technical information:
Cutterhead with profiled changeable knives. One knife with centre cutting design. Knives with shear angle. Different profiles possible in one tool body. Special profiles ground into blank knives and backing plates on request. Use cutterhead WP 500 1 for smaller decorative groove profiles (d < 15 mm).

For profiles, Z 2, cutting in end grain
WG 502 2 01

D mm	GL mm	SB mm	S mm	Z	DRI	ID
65	95	14 - 28	16x50	2	RH	**042872** ●
65	95	14 - 28	20x50	2	RH	**042873** ●
65	105	14 - 28	25x60	2	RH	**042870** ●

Sales unit consisting of cutterhead with clamping wedge but without profiled HW knives and backing plates. Tip with 1 replaceable profile knife and backing plate each, version A and 1 replaceable profile knife and backing plate each, version B.

Minimum order quantity:
Replaceable profile knife: 6 pcs. each A and B
Backing plates: 1 pc. each A and B
Profile examples see next page.

Spare parts:

Part-no.	BEZ	ABM mm	QAL	ID
1	Blank knife	35,5x30,5x2	HW	**007488** ●
1	Blank knife	35,5x30,5x2	HW	**007489** ●
2	Backing plate A	34x28x4		**007923** ●
2	Backing plate B	34x28x4		**007924** ●
3	Clamping wedge	25x15x8		**009969** ●
4	Allen screw	M8x16		**006042** ●
5	Allen screw	M8x14		**006073** ●
	Allen key	SW 4		**005445** ●

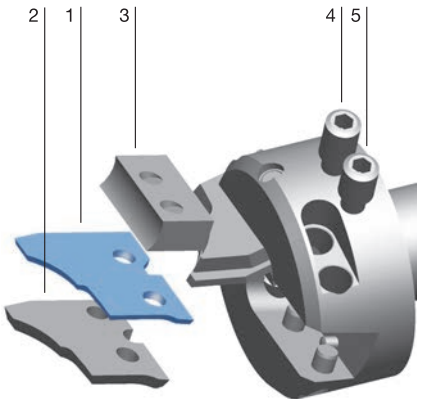

● available ex stock
□ available at short notice
Instruction manual visit www.leitz.org

Sets of profile knives and backing plates
AT 103 0, AT 199 0

P	ID Set of backing plates	ID Set of profile knives
1	**692200** □	**692000** □
2	**692201** □	**692001** □
3	**692202** □	**692002** □
4	**692203** □	**692003** □
5	**692204** □	**692004** □
6	**692205** □	**692005** □
7	**692206** □	**692006** □
8	**692207** □	**692007** □
9	**692208** □	**692008** □
10	**692209** □	**692009** □

Set of profile knives consisting of 1 profile knife design A and B each.
Set of backing plates consisting of 1 backing plate design A and B each.
Minimum order quantity: set of profile knives: 6 pcs., set of backing plates: 1 pc.

Profiles:

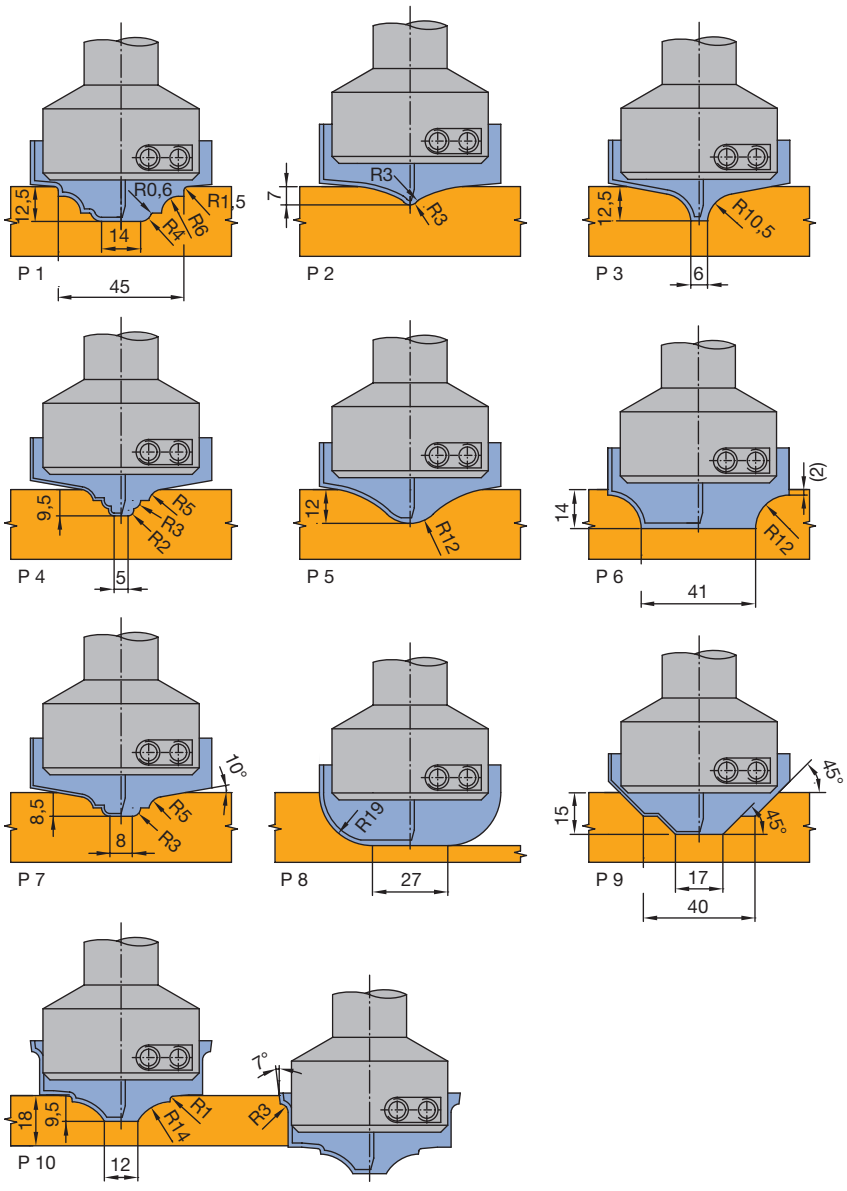





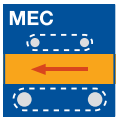



DP

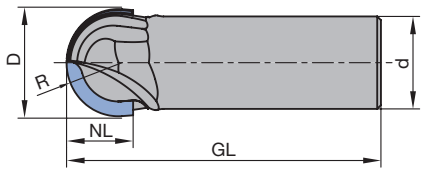

Router cutter - ProfilDiamaster ball nose

Application:
Routers to cut radius profiles in panels for furniture and interior construction.

Machine:
Stationary routers with/without CNC control, machining centres, milling machines with spindles to mount shank tools.

Workpiece material:
Chipboard and fibre materials (MDF, HDF etc.), uncoated, plastic coated, veneered etc.

Technical information:
DP profile edges with shear angle. Resharpenable 3 to 5 times with normal wear.

DP, Z 2
WO 531 2 51

D	GL	NL	S	R	DRI	ID
mm	mm	mm	mm	mm		
20	75	12	20x55	10	RH	**191035**
20	80	12	25x60	10	RH	**191036**
30	80	18	20x55	15	RH	**191037**
30	85	18	25x60	15	RH	**191038**
40	90	24	20x55	20	RH	**191039**
40	95	24	25x60	20	RH	**191040**

RPM: n = 18000 - 24000 min^{-1}

Other profiles on request.

Application example:
MDF wall covering or MDF furniture part



● available ex stock
□ available at short notice
Instruction manual visit www.leitz.org

Working step/Application	Profiling.
Workpiece material [recommended cutting material]	Softwood and hardwood [HS, HW]. Chipboard and fibre materials (MDF, HDF etc.), uncoated, plastic coated, veneered etc. [HW, DP]. Plywood [HW, DP]. Duromers [HW, DP]. Plastomers [HS, HW, DP]. Solid surface material (Corian, Varicor etc.) [HW, DP]. Decorative laminates (HPL-compact laminate, Trespa etc.) [HW, DP]. Non-ferrous metal (Aluminium, copper etc.) [HS, HW, DP].
Machine	Stationary routers with/without CNC control. Milling machines with spindles to mount shank tools.
Operation	For conventional and climb cut operations, limited chip removal.
Technical features	Profile shank cutters can be produced for the following profiles:

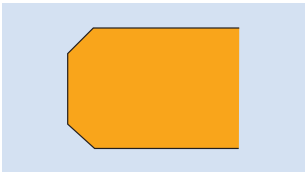

Bevelling

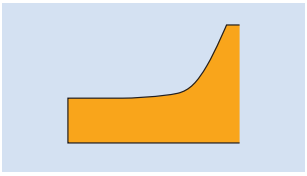

Panel raising

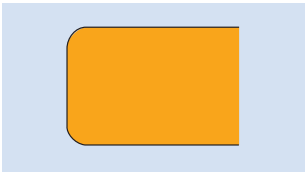

Edges with radii

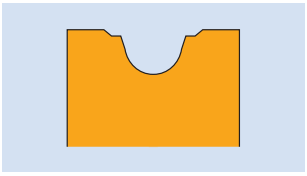

Decorative grooves

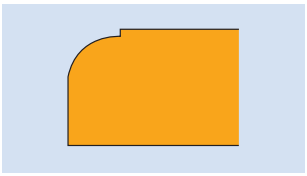

Quarter round

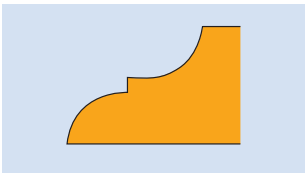

Other special profiles

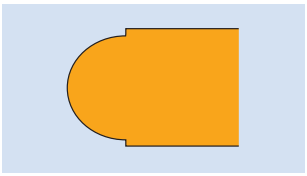

Half round

VariForm	Profile cutterhead with shank for blank knives on profiled tool body or blank knives with backing plates

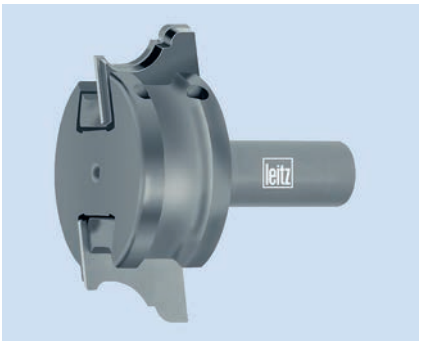

VariForm profile cutterhead with blank knives and backing plates



VariForm profile cutterhead with profiled tool body.

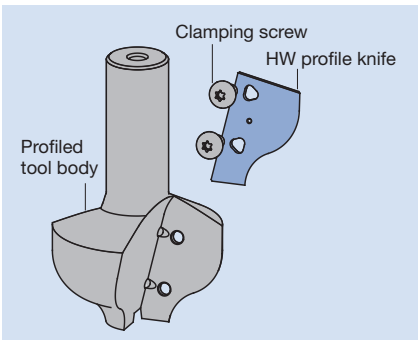

Profiling of the knives, backing plates and tool body by Leitz service.

Profile cutterhead with shank for serrated back blank knives

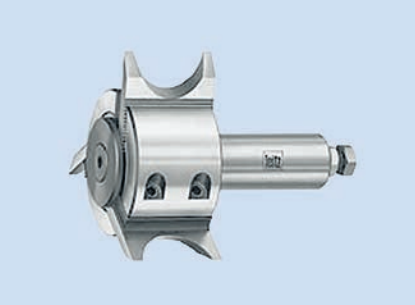

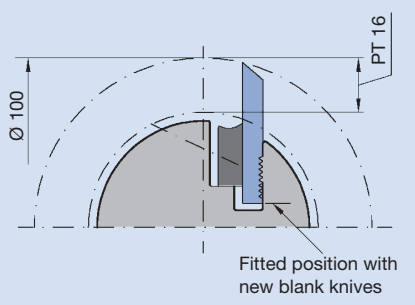

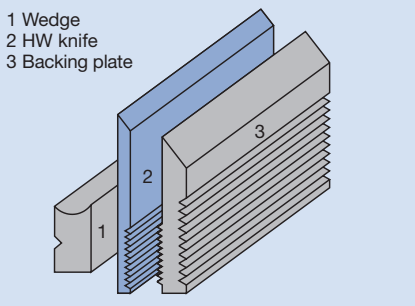

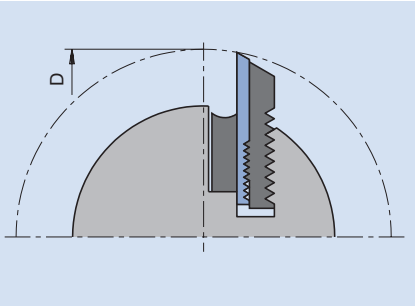

Existing profile cutterheads can use the Micro-system set.

Tipped profile shank cutter





Tipped profile shank cutters can be supplied in various designs.
Available with HS, HW and DP cutting materials and produced to customer requirements.
Designs with Z 1 - Z 5, with or without shear angle, Z 1/1 - Z 3/3 with alternate shear angles and with or without plunging tip.
Further information available from your nearest Leitz subsidiary or agency.





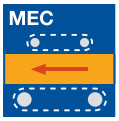







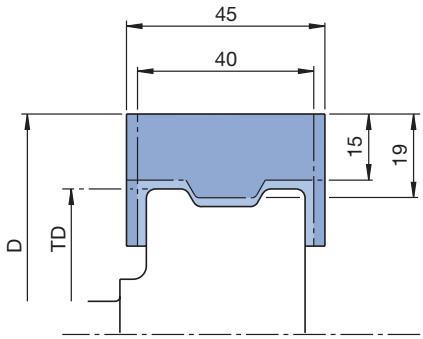

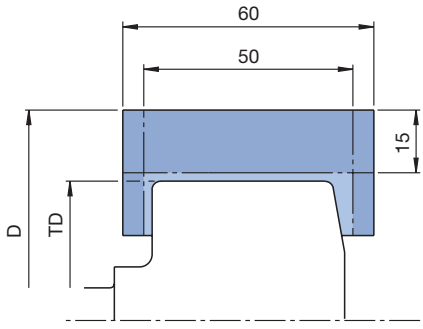

Profile area

Profile cutterhead VariForm with backing plates

Application:
For cutting different profiles. Profile can be changed by replacing profile knives and backing plates.

Machine:
Stationary routers with/without CNC control, milling machines with spindles to mount shank tools.

Workpiece material:
Softwood and hardwood (HW-30F), chipboard and fibre materials (MDF, HDF etc.), uncoated, plastic coated, veneered etc., laminated veneer lumber (plywood, multiplex plywood etc.) (HW-10F).

Technical information:
Three point knife clamping for high precision and safety. Economic, resharpenable 3 to 4 times. Modular system: use the same profile knives in different tool bodies on different machines.

Tool body, mech. feed, Z 2
TU 531 2

D mm	TD mm	SB mm	S mm	PT_{max} mm	DRI	ID
110	76	40/45	25x60	15	RH	**135400** ●
110	76	50/60	25x60	15	RH	**135401** ●

RPM: n_{max} = 12000 min^{-1}

Supplied with clamping wedges, but without backing plates and knives.

Spare knives:

BEZ	H mm	SB mm	PT_{max} mm	ID HW-10F	ID HW-30F
Blank knife VariForm	40	40	15	**636227** ●	**636240** ●
Blank knife VariForm	40	45	15	**636231** ●	**636244** ●
Blank knife VariForm	40	50	15	**636284** ●	**636272** ●
Blank knife VariForm	40	60	15	**636288** ●	**636276** ●

Spare parts:

Tool Type	ABM mm	H mm	for SB mm	PT_{max} mm	ID
Backing plate	for knives 40x40x2.1	40	40	15	**645000** ●
Backing plate	for knives 45x40x2.1	40	45	15	**645001** ●
Backing plate	for knives 50x40x2.1	40	50	15	**645002** ●
Backing plate	for knives 60x40x2.1	40	60	15	**645003** ●
Clamping wedge	36x13.5x26		40/45		**009761** ●
Clamping wedge	44x13.5x26		50/60		**009762** ●
Allen screw	M10x12				**006044** ●
Key	SW 5, L100				**117506** ●





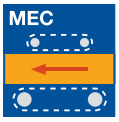



DP

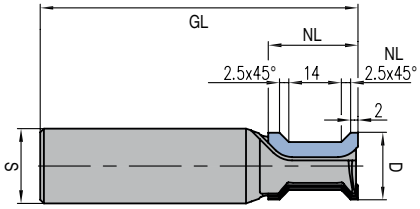

Profile router cutter Diamaster PRO

Application:
For bevelling 45° top and bottom up to a material thickness of 13 mm.

Machine:
Stationary routers with/without CNC control, machining centres, milling machines with spindles to mount shank tools.

Workpiece material:
Laminated materials (HPL-compact laminate, Trespa, multiplex plywood).

Technical information:
Resharpenable up to 3 times with normal wear.

DP, Z 2, 45° bevels at top and bottom
WO 532 2 51

D mm	GL mm	NL mm	S mm	Z	FAW °	DRI	ID
18	85	24	20x55	2	45	RH	**245500** ●

RPM: n = 24000 min^{-1} v_f = 2-5 m/min

● available ex stock
□ available at short notice
Instruction manual visit www.leitz.org





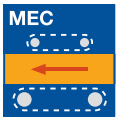



DP

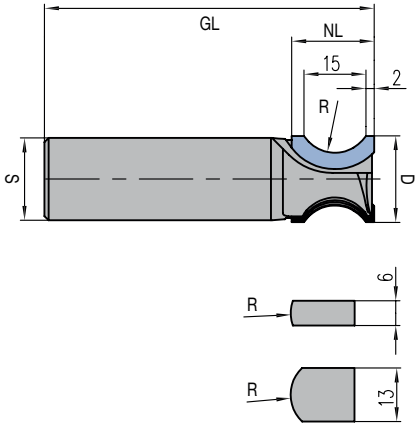

Profile router cutter Diamaster PRO

Application:
For convex profiles for edge formation. Can be used for all standard panel thicknesses.

Machine:
Stationary routers with/without CNC control, machining centres, milling machines with spindles to mount shank tools.

Workpiece material:
Laminated materials (HPL-compact laminate, Trespa, multiplex plywood).

Technical information:
Resharpenable up to 3 times with normal wear.

DP, Z 2, convex profile
WO 532 2 51

D mm	GL mm	NL mm	S mm	Z	R mm	DRI	ID
21,05	80	20	20	2	9	RH	**245501** ●
16,7	80	20	20	2	16	RH	**245502** ●

RPM: n = 24000 min^{-1} v_f = 2-5 m/min





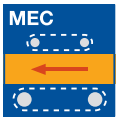



HW

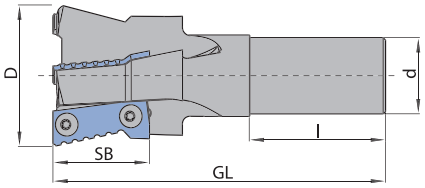

Cylindrical shank design

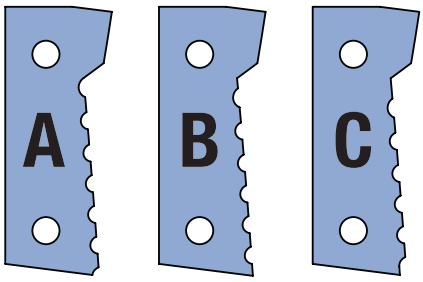

Spare knives Marathon type A, B, C

Dovetail router cutter with exchangeable knives

Application:
For producing dovetail joints especially in the wood and frame construction.

Machine:
Stationary routers with/without CNC control, machining centres, joinery machines, special cutting machines to process frame parts.

Workpiece material:
Softwood and hardwood, glulam and laminted wood.

Technical information:
HW changing knives Z3 with Marathon coating for extremely high performance times. Chipbreakers in roughing/finishing design for small cutting forces and nearly even areas. One knife each of knife type „A“, „B“ and „C“ has to be mounted in the cutter.

With cylindrical shank, incl. knives SB = 38 mm
WG 502 2

D mm	GL mm	SB mm	S mm	DRI	Z	ID without adaptor
60	131	38/51	30x53,5	LH	3	**250000** ●
60	131	38/51	30x53,5	RH	3	**250001** ●

RPM: n = 6000 - 18000 min^{-1}

Spare knives:

Part-no.	BEZ	SB mm	Type	ID LH	ID RH
1	Marathon profile knife	38	A	**602517** ●	**602509** ●
1	Marathon profile knife	38	B	**602518** ●	**602510** ●
1	Marathon profile knife	38	C	**602519** ●	**602511** ●
1	Marathon profile knife	51	A	**602520** ●	**602512** ●
1	Marathon profile knife	51	B	**602521** ●	**602513** ●
1	Marathon profile knife	51	C	**602522** ●	**602514** ●

Spare parts:

Part-no.	BEZ	ABM mm	ID
2	Oval head screw Torx® 15	M4x6	**006225** ●
3	Torx® key	Torx® 15	**005457** ●

● available ex stock
□ available at short notice
Instruction manual visit www.leitz.org

Working step/Application	Sizing, jointing, grooving and profiling.
Workpiece material [recommended cutting material]	Softwood and hardwood [HS, HW]. Chipboard and fibre materials (MDF, HDF etc.), uncoated, plastic coated, veneered etc. [HW]. Plywood [HW]. Duromers [HW, DP]. Plastomers [HS, HW]. Solid surface material (Corian, Varicor etc.) [HW]. Composite panels (Alucobond®, Dibond® etc.) [HW].
Machine	Portable routers
Operation	Conventional cut, limited chip removal.
Technical features	Tools for portable routers are: Straight routers: HS solid HW tipped HW solid HW turnblade DP tipped (Only for special applications with known workpieces). Profile routers: HW tipped DP tipped (Only for special applications with known workpieces).
Application parameters	**RPM** Recommended RPM for routing and boring tools on portable router machines:

	Recommended RPM n [min^{-1}]
Dowel drill	3000 – 9000
Hinge drill	3000 – 9000
Router cutter with cylindrical shank	18000 – 30000
Router cutter with internally thread shank	16000 – 24000
Turnblade router cutter WL 101 1	16000 – 18000
Profile cutters HW tipped	18000 – 27000

The RPM speeds marked on the shank are mandatory.

Feed	The manual feed speed of portable routers depends on the required cut quality and machine load. To ensure proper intended use of portable router bits it is only allowed to machine in conventional cut. Climb cut is not permissible.
Machining method	Portable routers are usually used either with guide bearings or templates when producing components in batches. Router cutters with guide bearings are suitable for additional machining operations on part finished components. Tools without guide bearings are generally used with either a side stop or a guide rail system.





Grooving cutters, shank 8 mm

Application:
Router cutter for sizing and grooving.

Machine:
Portable routers.

Workpiece material:
Softwood and hardwood, chipboard and fibre materials (MDF, HDF etc.), uncoated, plastic coated, veneered etc., laminated veneer lumber (plywood, multiplex plywood etc.).

Technical information:
Straight cut, ground on end or with tungsten carbide plunging tip.

HW solid, Z 2
WO 120 1 16

D	GL	NL	S	QAL	DRI	ID
mm	mm	mm	mm			
3	45	6	8x30	HW solid	RH	**072612** ●
4	45	10	8x30	HW solid	RH	**072608** ●
5	45	12	8x30	HW solid	RH	**072613** ●
6	55	14	8x40	HW solid	RH	**041984** ●
7	55	17	8x30	HW solid	RH	**041958** ●
8	55	20	8x30	HW solid	RH	**041985** ●
8	60	30	8x30	HW solid	RH	**072650** □

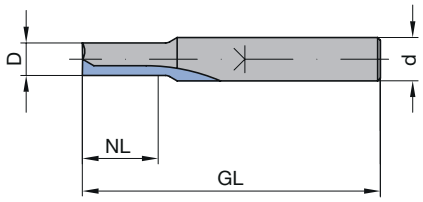

ID **041984**

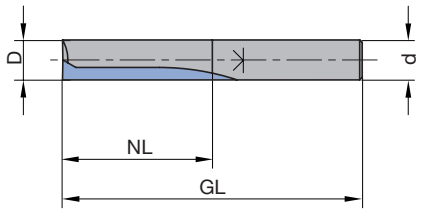

ID **072650**

HW, Z 2, short version
WO 120 1 09, WO 120 1 10

D	GL	NL	S	QAL	DRI	ID
mm	mm	mm	mm			
9	55	25	8x30	HW	RH	**040304** ●
10	60	20	8x40	HW	RH	**040440** ●
10	60	25	8x30	HW	RH	**072614** □
11	60	20	8x40	HW	RH	**040441** ●
12	60	20	8x40	HW	RH	**072368** ●
13	60	20	8x40	HW	RH	**072369** ●
14	60	20	8x40	HW	RH	**072370** ●
15	60	20	8x40	HW	RH	**072371** ●
16	70	20	8x50	HW	RH	**072372** ●
18	60	20	8x40	HW	RH	**072374** □
19	60	20	8x40	HW	RH	**072376** □
20	60	20	8x50	HW	RH	**072377** ●
22	60	20	8x50	HW	RH	**072379** ●
24	60	20	8x40	HW	RH	**072380** ●
25	60	20	8x40	HW	RH	**072381** ●
30	60	20	8x40	HW	RH	**072382** ●

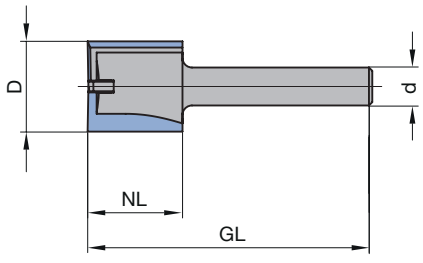

ID **072377**

HW, Z 2, long version
WO 120 1 10

D	GL	NL	S	QAL	DRI	ID
mm	mm	mm	mm			
10	60	30	8x30	HW	RH	**072651** ●
12	60	30	8x30	HW	RH	**072652** ●
16	65	30	8x35	HW	RH	**072373** ●
18	60	30	8x30	HW	RH	**072375** ●
20	60	30	8x30	HW	RH	**072378** ●

RPM: n = 18000 - 30000 min^{-1}

● available ex stock
□ available at short notice
Instruction manual visit www.leitz.org









HW

Grooving cutter, shank 12 mm

Application:
Router cutter for sizing and grooving. Grooving operation for automatic door seals.

Machine:
Portable routers.

Workpiece material:
Softwood and hardwood, chipboard and fibre materials (MDF, HDF etc.), uncoated, plastic coated, veneered etc., laminated veneer lumber (plywood, multiplex plywood etc.).

Technical information:
Straight cut, tungsten carbide plunging tip (only WO 120 1 10). Long version for increased cutting depth (recommended in several steps).

HW, Z 2
WO 120 1 01, WO 120 1 10

D mm	GL mm	NL mm	S mm	DRI	ID
10	90	35	12x40	RH	**072495** ●
12	90	40	12x40	RH	**072496** ●
13,2	85	35	12x40	RH	**072741** ●
14	85	40	12x40	RH	**072104** ●
14	100	50	12x40	RH	**072233** ●
15	85	35	12x40	RH	**072742** ●
16	90	45	12x40	RH	**072105** ●
16	100	60	12x40	RH	**072234** ●
18	90	45	12x40	RH	**072106** ●
20	90	45	12x40	RH	**072107** ●
22	90	45	12x40	RH	**072108** ●
24	90	45	12x40	RH	**072109** ●
30	90	35	12x40	RH	**072498** ●

RPM: n = 18000 - 30000 min^{-1}

Table for selection of grooving cutter depending on door seal:

Door seal	Width mm	Depth mm	ID
Doppeldicht	12	40	**072496**
Kältefeind	12	40	**072496**
Planet HS	13,1	30	**072741**
Schall-Ex L	14,8	32	**072742**
Schall-Ex RD	14,8	28	**072742**
Schall-Ex Ultra	19,7	30	**072107**









HW

Grooving cutter with internal threaded shank

Application:
Router cutter for sizing and grooving.

Machine:
Portable routers. M10: Scheer, M12: DeWalt (former ELU).

Workpiece material:
Softwood and hardwood, chipboard and fibre materials (MDF, HDF etc.), uncoated, plastic coated, veneered etc., laminated veneer lumber (plywood, multiplex plywood etc.).

Technical information:
Straight cut, ground on end or tungsten carbide plunging tip.

HW, Z 2
WO 120 1 06, WO 120 1 11, WO 120 1 12

D	GL	NL	S	QAL	DRI	ID
mm	mm	mm	mm			
10	67	35	M10	HW	RH	**042050** ●
12	70	40	M12	HW	RH	**040082** ●
16	75	45	M12	HW	RH	**040084** ●
20	60	25	M12	HW	RH	**039942** ●

RPM: n = 16000 - 24000 min^{-1}

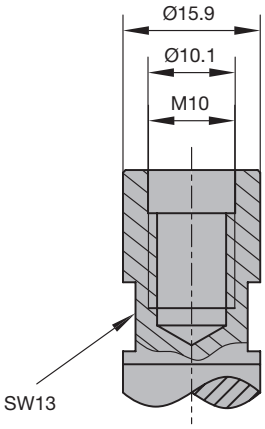

Threaded shank M10

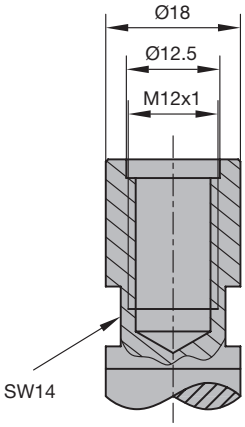

Threaded shank M12x1

● available ex stock
□ available at short notice
Instruction manual visit www.leitz.org








HS

Spiral grooving cutter HS

Application:
Router cutter for sizing and grooving.

Machine:
Portable routers.

Workpiece material:
Softwood and hardwood. Thermoplastics.

Technical information:
HS solid, spiral edges, ground plunging edge.

HS, Z 2
WO 160 1

D mm	GL mm	NL mm	S mm	Z	Twist	DRI	ID
6	50	21	8x25	2	RD	RH	**072766** ●
8	50	19	8x30	2	RD	RH	**072391** ●
10	60	30	8x30	2	RD	RH	**072393** ●
12	52	20	8x30	2	RD	RH	**072185** ●
14	52	20	8x30	2	RD	RH	**072186** ●
16	52	20	8x30	2	RD	RH	**072187** ●
18	57	25	8x30	2	RD	RH	**072188** ●
20	57	25	8x30	2	RD	RH	**072189** ●

RPM: n = 18000 - 30000 min^{-1}








HW

Spiral grooving cutter HW

Application:
Router cutter for sizing and grooving.

Machine:
Portable routers.

Workpiece material:
Softwood and hardwood, chipboard and fibre materials (MDF, HDF etc.), uncoated, plastic coated, veneered etc., laminated veneer lumber (plywood, multiplex plywood etc.). Thermoplastics. Solid surface material (Corian, Varicor etc.).

Technical information:
Solid tungsten carbide, spiral edges, ground plunging edge.

HW, Z 2
WO 160 1

D mm	GL mm	NL mm	S mm	QAL	Z	Twist	DRI	ID
4	45	10	8x25	HW solid	2	RD	RH	**072615** ●
6	50	21	8x30	HW solid	2	RD	RH	**072759** ●
8	55	25	8x30	HW solid	2	RD	RH	**072397** ●
10	60	30	8x30	HW solid	2	RD	RH	**072399** ●

RPM: n = 18000 - 30000 min^{-1}









HW

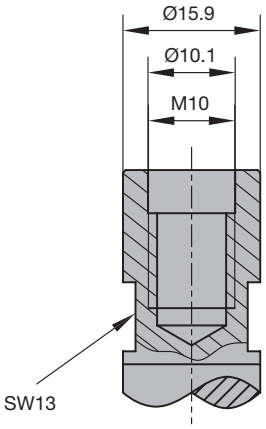

Threaded shank M10

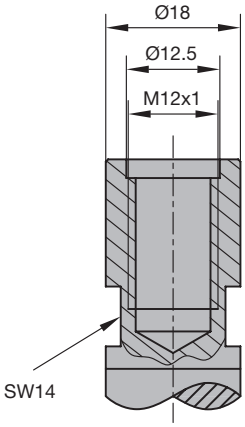

Threaded shank M12x1

Turnblade router cutter

Application:
Router cutter for sizing and grooving to finish quality.

Machine:
Portable routers. M10: Scheer, M12: DeWalt (former ELU).

Workpiece material:
Softwood and hardwood, chipboard and fibre materials (MDF, HDF etc.), uncoated, plastic coated, veneered etc., laminated veneer lumber (plywood, multiplex plywood etc.), duromers, plastomers, solid surface material (Corian, Varicor etc.).

Technical information:
Straight cut with tungsten carbide plunging tip. For grooving with constant tool diameter. Knife tip designed for seamless. Teflon coated tool body to reduce resin and glue build up.

HW, Z 1+1, with plunging tip
WL 101 1

D mm	GL mm	NL mm	S mm	DRI	ID
16	70	30	8x30	RH	**071050** ●
18	70	30	8x30	RH	**071051** ●
20	54	12	8x25	RH	**040824** ●
16	64	30	M10	RH	**040911** ●
20	64	30	M10	RH	**040915** ●
16	64	30	M12x1	RH	**040917** ●
18	64	30	M12x1	RH	**040919** ●
20	64	30	M12x1	RH	**040921** ●

RPM: n = 16000 - 18000 min^{-1}

Spare knives:

BEZ	Knife	ABM mm	for D mm	QAL	VE PCS	ID
Turnblade knife	Plunging tip	7,6x12x1,5	16 - 18	HW-05F	10	**005080** ●
Turnblade knife	Plunging tip	9x12x1,5	20	HW-05F	10	**005158** ●
Turnblade knife	Peripheral tip	12x12x1.5		HW-05F	10	**005081** ●
Turnblade knife	Peripheral tip	30x12x1,5		HW-05F	10	**005161** ●

Spare parts:

BEZ	Knife	ABM mm	for D mm	ID
Screw	Plunging tip	M3.5x4 (head D7)	16 - 20	**006068** ●
Screw	Peripheral tip	M3.5x4 (head D9)	16 - 20	**006226** ●
Torx® key		Torx® 15		**005457** ●

● available ex stock
□ available at short notice
Instruction manual visit www.leitz.org









HW

Turnblade router cutter

Application:
Router cutter for sizing and grooving to finish quality.

Machine:
Portable routers, limited suitable: stationary routers with/without CNC control, machining centres.

Workpiece material:
Softwood, chipboard and fibre materials (MDF, HDF etc.), uncoated, plastic coated, veneered etc.

Technical information:
Tungsten carbide turnblade knife clamped by wedge. Design without plunging tip only suitable for ramp plunging. Design with plunging tip limited suitable for axial plunging.

HW, Z 1, with plunging tip
WL 100 1

D mm	GL mm	NL mm	S mm	DRI	ID
14	107	45	12x40	RH	**041722** ●

HW, Z 1, without plunging tip
WL 100 1

D mm	GL mm	NL mm	S mm	DRI	ID
8	55	20	8x30	RH	**041622** ●
10	60	25	8x30	RH	**041641** ●
12	66	30	8x30	RH	**041665** ●
14	66	30	8x30	RH	**041670** ●

RPM: n = 16000 - 24000 min^{-1}

Spare knives:

BEZ	ABM mm	for D mm	NL mm	QAL	VE PCS	ID
Turnblade knife	20x4,1x1,1	8 - 9	20	HW-05	10	**005186** ●
Turnblade knife	25x5,5x1,1	10	25	HW-05	10	**005188** ●
Turnblade knife	30x5,5x1,1	11 - 24	30	HW-05	10	**005189** ●
Turnblade knife	50x5,5x1,1	14	50	HW-05	10	**005191** ●

Spare parts:

BEZ	ABM mm	for D mm	NL mm	ID
Clamping wedge	17,5x5,15x2,8	8 - 9	20	**009258** ●
Clamping wedge	22,5x6,54x4	10	25	**009260** ●
Clamping wedge	27,5x7,35x3,7	12 - 14	30	**009263** ●
Clamping wedge with plunging tip	45x3,7x7,35	14	45	**009749** ●
Countersink screw, Torx® 8	M2.5x5.7	8 - 11		**006231** ●
Countersink screw, Torx® 8	M3x7.6	12 - 14		**006233** ●
Countersink screw, Torx® 15	M4x11.5	16 - 20		**006234** ●
Torx® key	Torx® 8			**006092** ●
Torx® key	Torx® 15			**005457** ●









HW

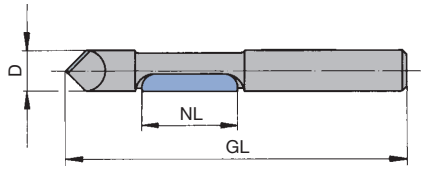

Panel pilot router cutter Z 1 with V-point plunging tip

Panel pilot router cutter

Application:
Router cutter for edge trimming of protruding veneer or laminates and for plunging and cutting apertures into veneered or laminated panels.

Machine:
Portable routers.

Workpiece material:
Chipboard and fibre materials (MDF, HDF etc.), uncoated, plastic coated, veneered etc., glulam (HPL, CPL etc.).

Technical information:
Straight cut with V-point plunging tip.

HW, Z 1, with guide pin
WO 250 0 01

D mm	GL mm	NL mm	S mm	DRI	ID
6	65	19	6x27	RH	**039610** ●
8	65	19	8x30	RH	**041586** ●

RPM: n = 18000 - 30000 min^{-1}

● available ex stock
□ available at short notice
Instruction manual visit www.leitz.org









HW

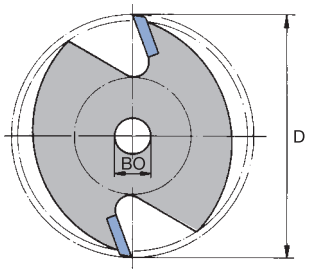

WK 200 3 01 grooving cutter Z 2

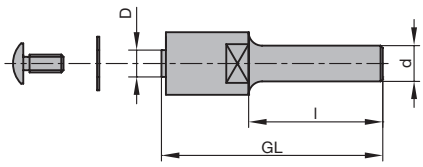

PM 100 0 Arbor

Grooving cutters

Application:
Router cutter for grooving panel edges.

Machine:
Portable routers.

Workpiece material:
Softwood and hardwood, chipboard and fibre materials (MDF, HDF etc.), uncoated, plastic coated, veneered etc., laminated veneer lumber (plywood, multiplex plywood etc.).

HW, Z 2, flat tooth, without arbor
WK 200 3 01

D mm	BO mm	SB mm	ID
40	6	1,5	**039644** ●
40	6	2	**039652** ●
40	6	2,5	**039660** ●
40	6	3	**039668** ●
40	6	3,5	**039672** ●
40	6	4	**039676** ●
40	6	5	**070653** ●

RPM: n = 12000 - 14000 min^{-1}

Application:
For fixing of grooving cutter WK 200 3 01 without ball bearing guide.

Arbor without ball bearing guide ring
PM 100 0

D mm	GL mm	S mm	DRI	ID
6	49	8x30	RH	**072772** □

Spare parts:

BEZ	ABM mm	ID
Washer	6x12x0.5	**116009** ●
Clamping screw, Torx® 15	M4x9	**007887** ●
Torx® key	Torx® 15	**005457** ●



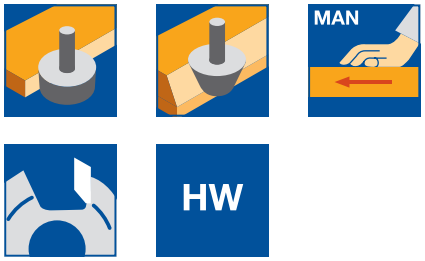

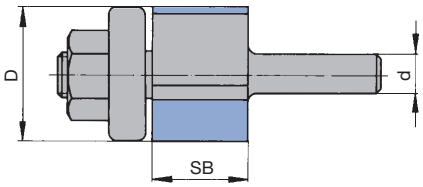

Edge trimming cutter with guide ring on bottom

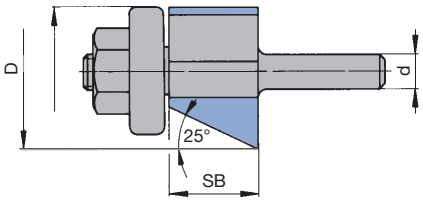

Square bevel trimming cutter with guide ring on bottom

Edge trimming cutter

Application:
Router for edge trimming or chamfering of protruding veneer, laminates or edgeband materials. Tool guided on the workpiece by ball bearing guide ring.

Machine:
Portable routers.

Workpiece material:
Softwood and hardwood, chipboard and fibre materials (MDF, HDF etc.), uncoated, plastic coated, veneered etc., laminated veneer lumber (plywood, multiplex plywood etc.).

Technical information:
Ball bearing guide ring for use with templates or guided by the workpiece edge.

Edge trimming cutter, HW, Z 2 with guide ring
WO 203 1, WO 203 1 01

D mm	SB mm	S mm	BEM	DRI	ID
21	15	6x30	Guide ring on bottom	RH	**039440** ●
12,7	25	8x30	Guide ring on bottom	RH	**072509** ●
19	25	8x30	Guide ring on shank side	RH	**072572** ●

RPM: n = 18000 - 27000 min^{-1}

Spare parts:

BEZ	BEM	ABM mm	ID
Ball bearing	to ID 072509	12.7x4.97x4.76	**008088** ●
Ball bearing	to ID 072572	19,05x12,7x4,97	**008105** ●
Ball bearing guide	to ID 039440	21x7,2x15,88	**072157** ●

Square bevel trimming cutter, HW, Z 1+1 / bevel 45°
WO 314 1 01

D mm	D1 mm	SB mm	S mm	FAW °	DRI	ID
24	18	11	8x30	45°	RH	**070477** ●

RPM: n = 18000 - 27000 min^{-1}

Spare parts:

BEZ	BEM	ABM mm	ID
Ball bearing guide	to ID 070477	18x8x15,88	**070828** ●

● available ex stock
□ available at short notice
Instruction manual visit www.leitz.org













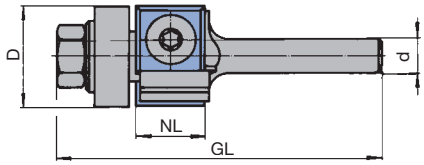

WL 220 1; 0°-jointing cutter with guide ring

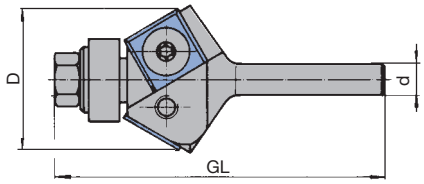

WL 320 1; 30°-bevel cutter with guide ring

Turnblade jointing / bevel cutter

Application:
Router cutter for edge trimming or bevelling on machines with copy shaping guide ring, side stop or guide rail systems.

Machine:
Portable routers.

Workpiece material:
Softwood and hardwood, chipboard and fibre materials (MDF, HDF etc.), uncoated, plastic coated, veneered etc., laminated veneer lumber (plywood, multiplex plywood etc.).

Technical information:
Tools with ball bearing guide ring for use with templates or guided by the workpiece edge. Replaceable tungsten carbide turnblade knives.

HW, Z 2, with ball bearing guide ring
WL 220 1, WL 320 1

Class.	D mm	GL mm	NL mm	S mm	FAW °	DRI	ID
WL 220 1	19	52,7	12	8x30	0°	RH	**072776** ●
WL 220 1	19	64,5	20	8x30	0°	RH	**040765** ●
WL 220 1	19	74,5	30	8x30	0°	RH	**040774** ●
WL 320 1	27	60		8x30	45°	RH	**072767** ●

RPM: n = 18000 - 30000 min^{-1}

Spare knives:

BEZ	Knife	for mm	ABM mm	QAL	VE PCS	ID
Turnblade knife	Peripheral tip	45°	12x12x1.5	HW-05F	10	**005081** ●
Turnblade knife	Peripheral tip		20x12x1,5	HW-05F	10	**005083** ●
Turnblade knife	Peripheral tip		30x12x1,5	HW-05F	10	**005084** ●

Spare parts:

BEZ	for mm	ABM mm	ID
Ball bearing	D19	19x6x6	**008082** ●
Ball bearing	D27/45°	12.7x4.97x4.76	**008088** ●
Nut	NL30	M6	**005651** ●
Oval head screw Torx® 15	NL12	M4x5	**007038** ●
Clamping screw, Torx® 15	NL12/45°	M4x9	**007887** ●
Oval head screw Torx® 15	NL20/30	M4x6	**006225** ●
Torx® key		Torx® 15	**005457** ●









HW

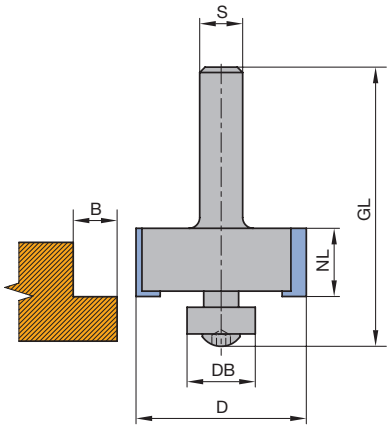

Note:
Variable rebating widths by changing the guide rings.

DB	9,53	12,7	16	19	22
B	11	9,5	7,9	6,35	4,9

Rebating cutter

Application:
Router for cutting rebates.

Machine:
Portable routers.

Workpiece material:
Softwood and hardwood, chipboard and fibre materials (MDF, HDF etc.), uncoated, plastic coated, veneered etc., laminated veneer lumber (plywood, multiplex plywood etc.).

Technical information:
Straight cut, ball bearing guide ring. Variable rebating width by changing the guide rings.

HW, Z 2
WO 434 1

D mm	DB mm	GL mm	NL mm	S mm	QAL	DRI	ID
31,7	12,7	54	12,7	8x30	HW	RH	**072479** ●

RPM: n = 16000 - 22000 min^{-1}

Spare parts:

BEZ	ABM mm	B mm	ID
Ball bearing	9.53x3.17x4.76	11	**008087** ●
Ball bearing	12.7x4.97x4.76	9,5	**008088** ●
Ball bearing guide	16x8x4,76	7,9	**072629** ●
Ball bearing guide	19x8x4,76	6,35	**072630** ●
Ball bearing guide	22x8x4,76	4,9	**072631** ●
Oval head screw Torx® 15	M4x8		**007407** ●
Torx® key	Torx® 15		**005457** ●

● available ex stock
□ available at short notice
Instruction manual visit www.leitz.org









HW

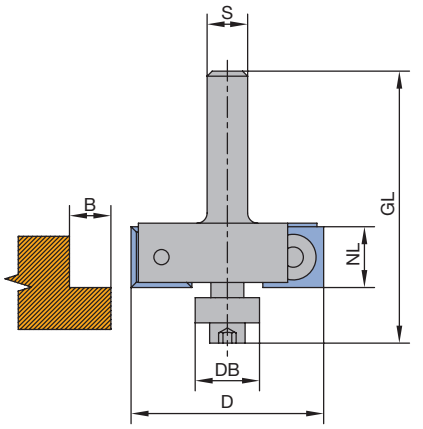

DB	9,53	12,7	16	19	22
B	14,2	12,6	11	9,5	8

Note:
Set of ball bearing guide rings consists of DB = 9.53 / 12.7 / 16 / 19 and 22 mm

Turnblade rebating cutter

Application:
Router for cutting rebates.

Machine:
Portable routers.

Workpiece material:
Softwood and hardwood, chipboard and fibre materials (MDF, HDF etc.), uncoated, plastic coated, veneered etc., laminated veneer lumber (plywood, multiplex plywood etc.).

Technical information:
Straight cut, ball bearing guide ring. Variable rebating width by changing the guide rings.

HW, Z 2, with set of ball bearing guide rings
AL 630 1

D mm	DB mm	GL mm	NL mm	S mm	QAL	DRI	ID
38	12,7	54	12,7	8x30	HW	RH	**072521** ●

RPM: n = 18000 - 27000 min^{-1}

Spare knives:

BEZ	ABM mm	QAL	ID
Turnblade knife	12x12x1.5	HW-05F	**005081** ●

Spare parts:

BEZ	ABM mm	B mm	ID
Ball bearing	9.53x3.17x4.76	11	**008087** ●
Ball bearing	12.7x4.97x4.76	9,5	**008088** ●
Ball bearing guide	16x8x4,76	7,9	**072629** ●
Ball bearing guide	19x8x4,76	6,35	**072630** ●
Ball bearing guide	22x8x4,76	4,9	**072631** ●
Oval head screw Torx® 15	M4x8		**007407** ●
Oval head screw Torx® 15	M4x6		**006225** ●
Torx® key	Torx® 15		**005457** ●









HW

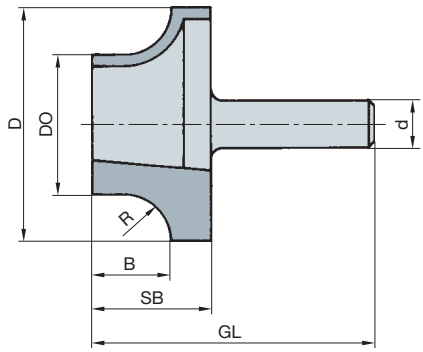

Quarter round cutter Z 2

Quarter round cutter

Application:
Router cutter for rounding with template, guide ring, side stop or guide rail system.

Machine:
Portable routers.

Workpiece material:
Softwood and hardwood, chipboard and fibre materials (MDF, HDF etc.), uncoated, plastic coated, veneered etc., laminated veneer lumber (plywood, multiplex plywood etc.).

Technical information:
Edges with shear angle, without plunging tip.

Quarter round cutter, HW, Z 2
WO 531 1 01

D mm	D_0 mm	SB mm	GL mm	S mm	R mm	DRI	ID
17	11	10	41	8x30	3	RH	**072429** ●
19	11	11	42	8x30	4	RH	**072431** ●
21	11	12	43	8x30	5	RH	**072433** ●
23	11	13	44	8x30	6	RH	**072435** ●
27	11	15	45	8x30	8	RH	**072437** ●

RPM: n = 18000 - 27000 min^{-1}

● available ex stock
□ available at short notice
Instruction manual visit www.leitz.org








HW

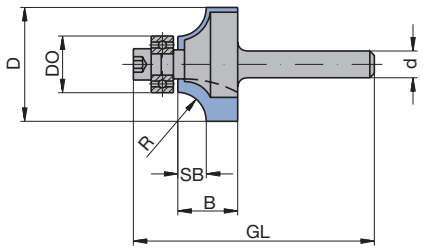

Radius cutter

Radius cutter

Application:
Router cutter for rounding over workpiece edges. Tool guided along workpiece by ball bearing guide.

Machine:
Portable routers.

Workpiece material:
Softwood and hardwood, chipboard and fibre materials (MDF, HDF etc.), uncoated, plastic coated, veneered etc., laminated veneer lumber (plywood, multiplex plywood etc.).

Technical information:
Ball bearing guide ring on bottom for use with templates or guided by the workpiece edge.

Radius cutter, HW, Z 2, shank 6 / 8 mm
WO 551 1

D mm	D_0 mm	GL mm	SB mm	B mm	S mm	R mm	DRI	ID
16,7	12,7	49	2	12	6x30	2	RH	**072456** ●
18,7	12,7	50	3	7	6x30	3	RH	**072458** ●
25,5	12,7	54	6	12	6x30	6,35	RH	**072462** ●
17,1	12,7	49	2	12	8x30	2,2	RH	**072636** ●
19,1	12,7	50	3	7	8x30	3	RH	**072635** ●
22,7	12,7	52	5	9	8x30	5	RH	**072634** ●
28,7	12,7	55	8	12	8x30	8	RH	**072632** ●
31,7	12,7	56	9,5	16,5	8x30	9,5	RH	**072637** ●
42,7	12,7	62	15	22	8x30	15	RH	**072639** ●

RPM: n = 18000 - 27000 min^{-1}

Radius cutter, HW, Z 2, shank 12 mm
WO 551 1

D mm	D_0 mm	GL mm	SB mm	B mm	S mm	R mm	DRI	ID
63	12,7	80	26	32	12x40	25	RH	**072501** ●

RPM: n = 16000 - 22000 min^{-1}

Spare parts:

BEZ	ABM mm	ID
Ball bearing	12.7x4.97x4.76	**008088** ●
Cap screw	M4x10	**005846** ●









HW

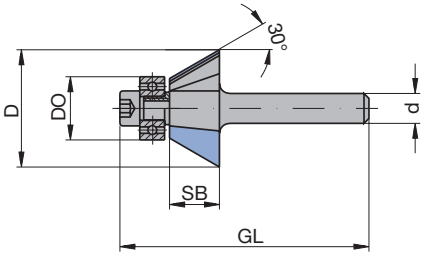

WO 314 1 02 bevel cutter 30°

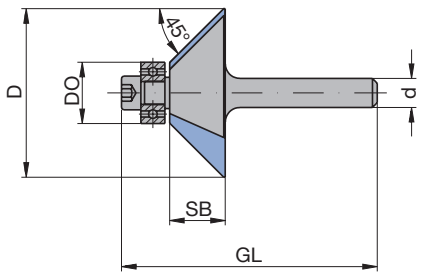

WO 314 1 03 bevel cutter 45°

Bevel cutter

Application:
Router cutter for bevelling workpiece edges. Tool guided along workpiece by ball bearing guide.

Machine:
Portable routers.

Workpiece material:
Softwood and hardwood, chipboard and fibre materials (MDF, HDF etc.), uncoated, plastic coated, veneered etc., laminated veneer lumber (plywood, multiplex plywood etc.).

Technical information:
Ball bearing guide ring on bottom for use with templates or guided by the workpiece edge.

Bevel cutter, HW, Z 2, shank 8 mm
WO 314 1, WO 315 1

D mm	D_0 mm	GL mm	SB mm	FAW °	S mm	DRI	ID
25,7	12,7	70	25,1	15°	8x30	RH	**072522** ●
25	12,7	50,3	12	30°	8x30	RH	**072774** ●
38,5	12,7	64,5	23	30°	8x30	RH	**072523** ●
26	12,7	47,8	7	45°	8x30	RH	**072775** ●

Spare parts:

BEZ	ABM mm	for D_0 mm	ID
Ball bearing	12.7x4.97x4.76	12,7	**008088** ●
Ball bearing	15.88x5x6.35	15,88	**008081** ●
Cap screw	M4x10		**005846** ●

Bevel cutter, HW, Z 2, shank 12 mm
WO 315 1

D mm	D_0 mm	GL mm	SB mm	FAW °	S mm	DRI	ID
55	12,7	76	20	45°	12x40	RH	**072517** ●

RPM: n = 18000 - 27000 min^{-1}

Spare parts:

BEZ	ABM mm	for D_0 mm	ID
Ball bearing	12.7x4.97x4.76	12,7	**008088** ●
Cap screw	M4x10		**005846** ●

● available ex stock
□ available at short notice
Instruction manual visit www.leitz.org








HW

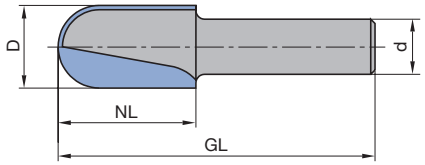

Guttering mould cutter without guide ring

Guttering mould cutter

Application:
Router cutter for cutting draining grooves and for copy shaping.

Machine:
Portable routers.

Workpiece material:
Softwood and hardwood, chipboard and fibre materials (MDF, HDF etc.), uncoated, plastic coated, veneered etc., laminated veneer lumber (plywood, multiplex plywood etc.).

Technical information:
For use with separate guide rings and templates, side stop or guide rail system.

Guttering mould cutter, HW, Z 2, shank 8 mm
WO 531 1, WO 531 1 06

D	GL	NL	S	R	DRI	ID
mm	mm	mm	mm	mm		
8	38	8	8x30	4	RH	**041153** ●
16	65	25	8x30	5	RH	**072616** ●
12,7	40	10	8x30	6,35	RH	**072403** ●
16	41	11	8x30	8	RH	**072405** ●
19,4	41	11	8x30	9,7	RH	**072057** ●
25,4	44	14	8x30	12,7	RH	**072058** ●

Guttering mould cutter, HW, Z 2, shank 12 mm
WO 531 1

D	GL	NL	S	R	DRI	ID
mm	mm	mm	mm	mm		
30	60	20	12x40	15	RH	**072222** ●
40	65	25	12x40	20	RH	**072239** ●

RPM: n = 18000 - 27000 min^{-1}









HW

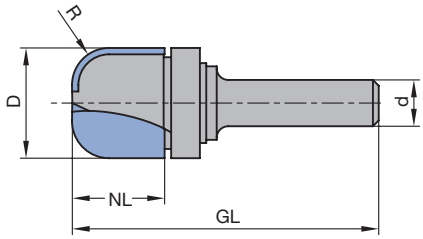

Guttering mould cutter with guide ring

Guttering mould cutter with guide ring

Application:
Router cutter for cutting draining grooves and for copy shaping.

Machine:
Portable routers.

Workpiece material:
Softwood and hardwood, chipboard and fibre materials (MDF, HDF etc.), uncoated, plastic coated, veneered etc., laminated veneer lumber (plywood, multiplex plywood etc.).

Technical information:
Ball bearing guide ring on top, for use with templates or guide rail system.

Guttering mould cutter, HW, Z 2, with guide ring
WO 551 1

D mm	GL mm	NL mm	S mm	R mm	DRI	ID
19	53	16	8x30	6,4	RH	**072617** ●

RPM: n = 18000 - 27000 min^{-1}

Spare parts:

BEZ	ABM mm	ID
Ball bearing	19,05x12,7x4,97	**008105** ●
Safety washer	12x1 DIN 471	**008419** ●

● available ex stock
□ available at short notice
Instruction manual visit www.leitz.org









HW

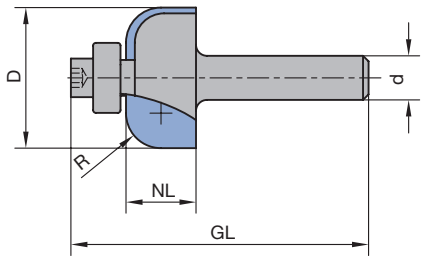

Guttering mould cutter with guide ring

Guttering mould cutter with guide ring

Application:
Router for cutting cove moulds.

Machine:
Portable routers.

Workpiece material:
Softwood and hardwood, chipboard and fibre materials (MDF, HDF etc.), uncoated, plastic coated, veneered etc., laminated veneer lumber (plywood, multiplex plywood etc.).

Technical information:
Cutting edges with shear angle, ball bearing guide ring on bottom for use with templates or guide rail system.

HW, Z 2
WO 551 1, WO 551 1 02

D	GL	NL	S	R	DRI	ID
mm	mm	mm	mm	mm		
25,5	54	12,7	8x30	6,35	RH	**072471** ●
28,8	56	14	8x30	8	RH	**072473** ●
31,7	56	14,3	8x30	9,5	RH	**072475** ●
38,1	57	16	8x30	12,7	RH	**072477** ●

RPM: n = 18000 - 27000 min^{-1}

Spare parts:

BEZ	ABM	ID
	mm	
Ball bearing	12.7x4.97x4.76	**008088** ●
Cap screw	M4x10	**005846** ●









HS

HW

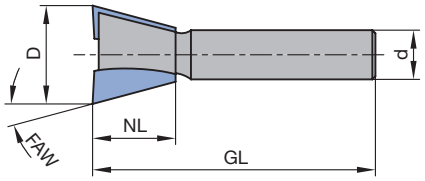

Dovetail cutter without spurs

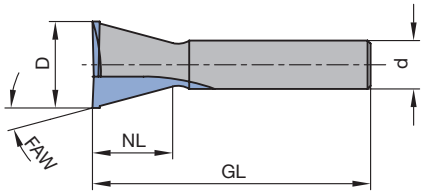

Dovetail cutter with spurs

Dovetail cutter

Application:
Routers for dovetail joints.

Machine:
Portable routers.

Workpiece material:
Softwood and hardwood, laminated veneer lumber (plywood, multiplex plywood etc.).

Technical information:
Cutting edges with shear angle. Design with spurs for increased cutting quality.

HS / HW, Z 2, shank 8 mm, without spurs
WO 610 1, WO 612 1

D mm	GL mm	NL mm	S mm	FAW °	QAL	DRI	ID
13,8	46	13,5	8x30	15°	HS	RH	**072757** ●
20	49	17	8x30	15°	HS	RH	**072411** ●
13,8	46	13,5	8x30	15°	HW	RH	**072758** ●
16	46	13,5	8x30	15°	HW	RH	**072045** ●
20	49	17	8x30	15°	HW	RH	**072417** ●
14,3	50	16	8x30	10°	HW	RH	**072585** ●
20	58	26	8x30	10°	HW	RH	**072583** ●

HW, Z 2, shank 8 mm, with spurs
WO 612 1

D mm	GL mm	NL mm	S mm	FAW °	QAL	DRI	ID
14,3	46	13,5	8x30	15°	HW	RH	**070361** □

RPM: n = 18000 - 27000 min^{-1}

● available ex stock
□ available at short notice
Instruction manual visit www.leitz.org









HS

HW

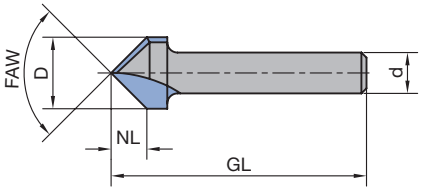

V- groove / engraving cutter

V-groove / engraving cutter

Application:
Routers for cutting V-grooves and engraving.

Machine:
Portable routers.

Workpiece material:
Softwood and hardwood, chipboard and fibre materials (MDF, HDF etc.), uncoated, plastic coated, veneered etc., laminated veneer lumber (plywood, multiplex plywood etc.).

Technical information:
Cutting edges with shear angle. Z 1 suitable for fine engraving operations.

HS / HW, Z 1
WO 531 1

D mm	GL mm	NL mm	S mm	FAW °	QAL	DRI	ID
11	50	9,5	8x30	60°	HW	RH	**070562** ●
11	55	9,5	8x30	60°	HS	RH	**070262** ●

HS / HW, Z 2
WO 531 1

D mm	GL mm	NL mm	S mm	FAW °	QAL	DRI	ID
11	50	9,5	8x30	60°	HS	RH	**072421** ●
14	50	7	8x30	90°	HS	RH	**072423** ●
14	50	7	8x30	90°	HW	RH	**072425** ●

RPM: n = 18000 - 27000 min^{-1}









HW

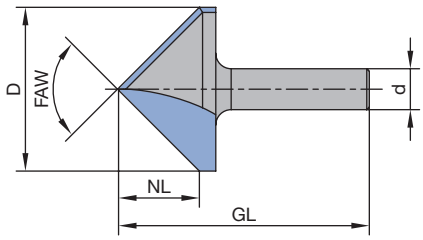

V-groove cutter for plasterboard

V-groove cutter for plasterboard

Application:
Router for cutting V-grooves in plasterboard for folding.

Machine:
Portable routers.

Workpiece material:
Plasterboard and gypsum fibre, softwood and hardwood, chipboard and fibre materials (MDF, HDF etc.), uncoated, plastic coated, veneered etc., laminated veneer lumber (plywood, multiplex plywood etc.).

Technical information:
Cutting edges with shear angle, flat point designed for folding.

HW, Z 1 / Z 2
WO 531 1

D mm	GL mm	NL mm	S mm	FAW °	QAL	Z	DRI	ID
12,5	55	14	8x30	45°	HW	1	RH	**072618** ●
32	49	16	8x30	90°	HW	2	RH	**070673** ●

RPM: n = 18000 - 27000 min^{-1}

● available ex stock
□ available at short notice
Instruction manual visit www.leitz.org








HW

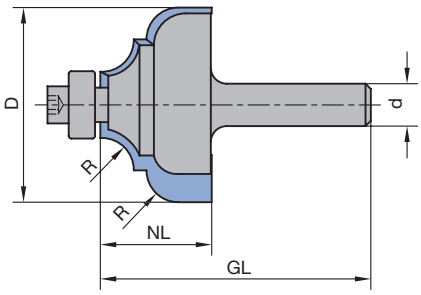

Profile cutter with guide ring WO 551 1

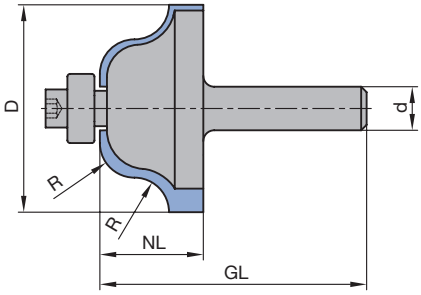

Double radius cutter with guide ring WO 531 1

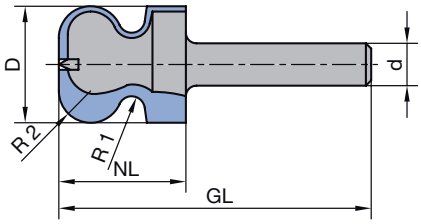

Finger pull cutter WO 532 1

Profile cutter

Application:
Router cutter for profiling.

Machine:
Portable routers.

Workpiece material:
Softwood and hardwood, chipboard and fibre materials (MDF, HDF etc.), uncoated, plastic coated, veneered etc., laminated veneer lumber (plywood, multiplex plywood etc.).

Technical information:
Cutting edges with shear angle. With guide ring for guiding along the workpiece edges. Finger pull cutter for cutting a covered grip rail on furniture fronts.

HW, Z 2, profile cutter, with guide ring
WO 551 1

D mm	GL mm	NL mm	S mm	R mm	DRI	ID
36,7	61	21	8x30	6	RH	**072511** ●

Spare parts:

BEZ	ABM mm	ID
Ball bearing	12.7x4.97x4.76	**008088** ●
Cap screw	M4x10	**005846** ●

HW, Z 2, double radius cutter, with guide ring
WO 551 1

D mm	GL mm	NL mm	S mm	R mm	DRI	ID
31,7	53	13	8x30	4	RH	**072481** ●
38,1	59	19	8x30	6,35	RH	**072483** ●

Spare parts:

BEZ	ABM mm	ID
Ball bearing	12.7x4.97x4.76	**008088** ●
Cap screw	M4x10	**005846** ●

HW, Z 2, finger pull cutter
WO 532 1

D mm	GL mm	NL mm	S mm	R1 mm	R2 mm	DRI	ID
22	59	16	8x30	2,5	6	RH	**072624** ●

RPM: n = 18000 - 27000 min^{-1}









HW

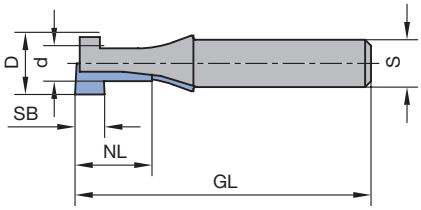

T-groove cutter

T-groove cutter

Application:
Router for cutting T-grooves and keyholes.

Machine:
Portable routers.

Workpiece material:
Softwood and hardwood, chipboard and fibre materials (MDF, HDF etc.), uncoated, plastic coated, veneered etc., laminated veneer lumber (plywood, multiplex plywood etc.).

Technical information:
Straight cut.

HW, Z 1
WO 120 1

D mm	d mm	SB mm	GL mm	NL mm	S mm	QAL	DRI	ID
10,5	6,5	5	50	13	8x30	HW	RH	**072526** ●

RPM: n = 18000 - 27000 min^{-1}

● available ex stock
□ available at short notice
Instruction manual visit www.leitz.org









HW

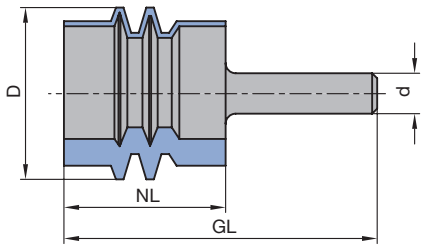

Glue joint cutter

Glue joint cutter

Application:
Routers for cutting glue joint profiles.

Machine:
Portable routers.

Workpiece material:
Softwood and hardwood, laminated veneer lumber (plywood, multiplex plywood etc.).

Technical information:
Straight cut. Guide by side stop or guide rail system.

HW, Z 2
WO 631 1

D mm	GL mm	NL mm	HD mm	S mm	QAL	DRI	ID
34	62	32	30	8x30	HW	RH	**072197** ●

RPM: n = 18000 - 27000 min^{-1}








HW

Spiral grooving cutter

Application:
Router for sizing and grooving.

Machine:
Portable routers.

Workpiece material:
Solid surface material (Corian, Varicor etc.).

Technical information:
Solid tungsten carbide design, spiral-shaped edges, ground plunging edge.

HW, Z 2, spiral roughing/finishing cutter
WO 160 2 04

D mm	GL mm	NL mm	S mm	Twist	DRI	ID
12	87	42	12x40	LD	RH	**072707** ●

HW, Z 2, spiral finishing cutter
WO 160 2 05

D mm	GL mm	NL mm	S mm	Twist	DRI	ID
10	70	25	10x40	RD	RH	**042458** ●
12	70	25	12x40	RD	RH	**042758** ●
12	87	42	12x40	RD	RH	**072705** ●

RPM: n = 18000 - 27000 min^{-1}




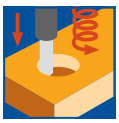




HW

Turnblade grooving cutter

Application:
Router cutter for sizing and grooving.

Machine:
Portable routers.

Workpiece material:
Solid surface material (Corian, Varicor etc.).

Technical information:
Straight cut. Design with plunging tip limited suitable for axial plunging.

HW, Z 1, with plunging tip
WL 100 1

D mm	GL mm	NL mm	S mm	DRI	ID
14	107	45	12x40	RH	**041722** ●

RPM: n = 16000 - 24000 min^{-1}

Spare knives:

BEZ	ABM mm	NL mm	QAL	VE PCS	ID
Turnblade knife	50x5,5x1,1	50	HW-05	10	**005191** ●

Spare parts:

BEZ	ABM mm	ID
Clamping wedge with plunging tip	45x3,7x7,35	**009749** ●
Countersink screw, Torx® 8	M3x7.6	**006233** ●

● available ex stock
□ available at short notice
Instruction manual visit www.leitz.org








HW

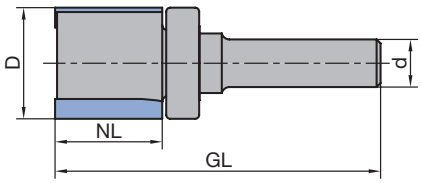

Edge trimming cutter with guide ring on top

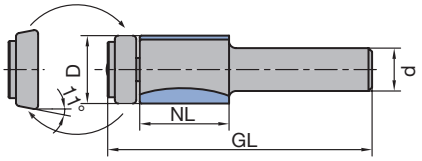

Edge trimming cutter with guide ring on bottom



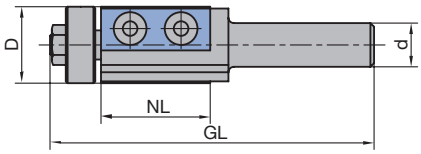

Turnblade edge trimming cutter with guide ring on bottom

Edge trimming cutter with guide ring

Application:
Router for trimming protrusions of glued solid surface material construction parts.

Machine:
Portable routers.

Workpiece material:
Solid surface material (Corian, Varicor etc.).

Technical information:
Straight cut. Plastic covered ball bearing guide ring for protection against marks on the workpiece.

HW, Z 2, with guide ring on top
WO 203 1

D mm	GL mm	NL mm	S mm	DRI	ID
28	80	25	12x40	RH	**072697** ●

Spare parts:

BEZ	ABM mm	ID
Ball bearing guide	28x8,3x15	**072712** ●

HW, Z 2, with guide on bottom
AO 640 1

D mm	GL mm	NL mm	S mm	DRI	ID
19	74	25	12x40	RH	**072709** ●

Spare parts:

BEZ	ABM mm	ID
Ball bearing guide	19x8x4,76	**072630** ●
Ball bearing guide	22x8x4.76/11°	**072711** ●
Oval head screw Torx® 15	M4x8	**007407** ●

HW turnblade, Z 2, with guide ring on bottom
WL 220 1

D mm	GL mm	NL mm	S mm	DRI	ID
21	89	30	12x40	RH	**072220** ●

RPM: n = 18000 - 27000 min^{-1}

Spare knives:

BEZ	ABM mm	VE PCS	ID
Turnblade knife	30x12x1,5	10	**005161** ●

Spare parts:

BEZ	ABM mm	ID
Ball bearing guide	15,88x21x8,1	**072255** ●
Nut	M6	**005651** ●
Oval head screw Torx® 15	M4x6	**006225** ●
Torx® key	Torx® 15	**005457** ●

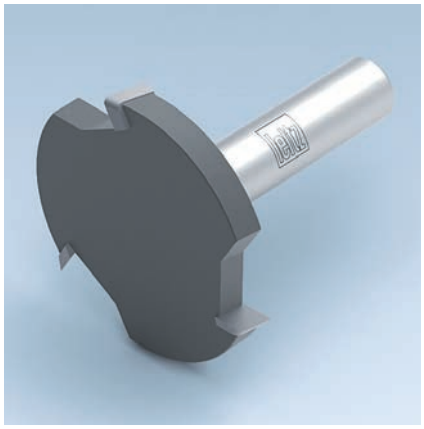







HW

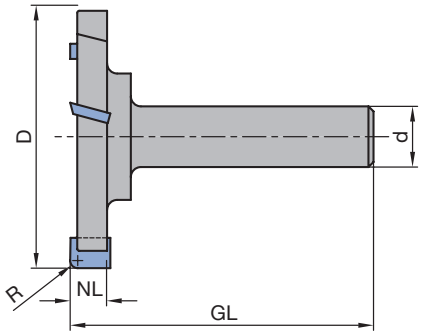

Planing cutter Z 3

Planing cutter

Application:
Router for cutting panel raising profiles.

Machine:
Portable routers.

Workpiece material:
Solid surface material (Corian, Varicor etc.).

Technical information:
Optimised cutting geometry for clean planed surface. Also suitable for edge trimming of installed sinks of solid surface material.

HW, Z 3
WO 110 1

D mm	GL mm	NL mm	S mm	n_{max} min^{-1}	DRI	ID
52	60	7,3	12x40	27000	RH	**072693** ●

● available ex stock
□ available at short notice
Instruction manual visit www.leitz.org









HW

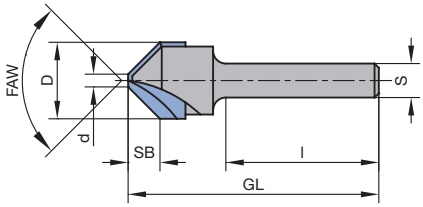

V-groove cutter for composite panels

V-groove cutter for composite panels

Application:
Routers for cutting V-grooves in composite panels for folding operations.

Machine:
Portable routers.

Workpiece material:
Composite panels based on thermoplastic cores with aluminium coverage on both sides (e.g. Alucobond®, Dibond® etc.).

Technical information:
Stable edges, flat point for folding operations.

HW, Z 2
WO 531 2

D	d	GL	NL	S	FAW	QAL	Z	DRI	ID
mm	mm	mm	mm	mm	°				
18	3	59	8	8x39	90°	HW	2	RH	**070564** ●
18	2	59	3,3	8x39	135°	HW	2	RH	**070565** ●

RPM: n = 18000 - 27000 min^{-1}

Application example:

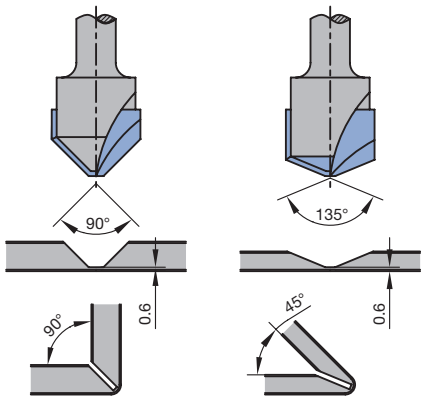

Production of folding corners on composite panels









HW

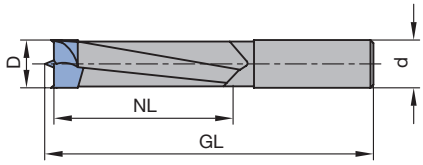

Dowel drill Z 2 / V 2

Dowel drill, HW, Z 2 / V 2

Application:
For drilling blind holes, particularly dowel holes in furniture construction.

Machine:
Portable routers.

Workpiece material:
Softwood and hardwood, chipboard and fibre materials (MDF, HDF etc.), uncoated, plastic coated, veneered etc., laminated veneer lumber (plywood, multiplex plywood etc.).

Technical information:
Spurs geometry with shear cut. Tool body with reduced diameter for minimum friction and feed force. Cylindrical shank without clamping flat.

Dowel drill, HW, Z 2 / V 2
WB 101 0, WB 120 0

D	GL	NL	S	DRI	ID
mm	mm	mm	mm		
3	55	16	8x30	RH	**072597** ●
5	60,5	30	8x27	RH	**072752** ●
6	60,5	30	8x27	RH	**072753** ●
8	60,5	30	8x27	RH	**072754** ●
10	60,5	30	8x27	RH	**072755** ●

RPM: n = 3000 - 9000 min^{-1}

● available ex stock
□ available at short notice
Instruction manual visit www.leitz.org









HW

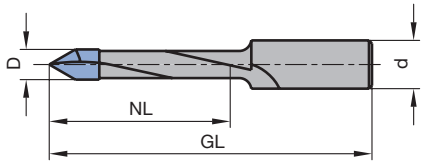

Through hole drill Z 2

Through-hole drill, HW, Z 2

Application:
For drilling through-holes in furniture construction.

Machine:
Portable routers.

Workpiece material:
Softwood and hardwood, chipboard and fibre materials (MDF, HDF etc.), uncoated, plastic coated, veneered etc., laminated veneer lumber (plywood, multiplex plywood etc.).

Technical information:
Conical tip design for tear-free through-holes. Tool body with reduced diameter for minimum friction and feed force. Cylindrical shank without clamping flat.

Through-hole drill, HW, Z 2
WB 101 0

D mm	GL mm	NL mm	S mm	DRI	ID
5	60,5	30	8x27	RH	**072756** ●

RPM: n = 3000 - 9000 min^{-1}









HW

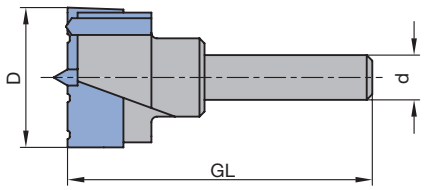

Hinge boring bit Z 2 / V 2

Hinge boring bit

Application:
For drilling hinge holes in furniture construction.

Machine:
Portable routers.

Workpiece material:
Softwood and hardwood, chipboard and fibre materials (MDF, HDF etc.), uncoated, plastic coated, veneered etc., laminated veneer lumber (plywood, multiplex plywood etc.).

Technical information:
Good centering in solid wood by centre point. Minimised friction by relief ground spurs and raker edge with chip breakers. Cylindrical shank without clamping flat.

HW, Z 2 / V 2
WB 310 0

D	GL	S	DRI	ID
mm	mm	mm		
15	54,5	8x30	RH	**034660** ●
18	54,5	8x30	RH	**072596**
20	54,5	8x30	RH	**072012**
22	54,5	8x30	RH	**072740** ●
25	54,5	8x30	RH	**034656** ●
26	54,5	8x30	RH	**034658** ●
30	54,5	8x30	RH	**034657** ●
34	54,5	8x30	RH	**072196** ●
35	54,5	8x30	RH	**034659** ●

RPM: n = 3000 - 9000 min^{-1}

● available ex stock
□ available at short notice
Instruction manual visit www.leitz.org

Problem	Possible cause	Action
Chatter marks Loud cutting noise	– Wrong removal rate	Adjust feed speed and RPM for cutting depth to the chart on the product page. If necessary, machine the cutting depth in 2 steps or precut with roughing router cutter.
	– Incorrectly adjusted tool dimensions	Use a more solid tool with largest possible shank and tool diameters and short working length. Select tool with staggered or spiral cutting edges.
	– Vibrations of the tool spindle system	Note minimum shank clamping length. $l_{e\ min}$ = 2 x shank diameter. Do not machine with long or secondary chucks. Use short chunks (PM 320 0 53) or shrink clamping devices. Check and, if necessary, repair machine guides and motor bearings.
	– Insufficient clamping of workpiece	Increase vacuum clamping. Clamp waste. Improve workpiece clamping by mechanical clamping, friction or fastening with screws.
Marks on the workpiece from tools with staggered cutting edges **Note:** Tools with staggered cutting edges cannot produce surfaces free of marks due to minor tolerances in concentricity. In MDF and solid wood, concentricity inaccuracies of 0.03 mm are visible.	– Errors in concentric running of clamping chuck, motor spindle or tool	To identify cause, turn tool 90° in the chuck and cut again: A change in the marks on the workpiece point to chuck error. Most accurate concentricity is achieved using hydro chucks or shrink chucks. Constant cutter marks point to a defective tool which should be repaired or exchanged.
	– Unstable spindle bearing	Select short chucks. Do not use extension pieces.
Tool breakage of shank cutters	– Cutting depth or feed speed too high	Adjust application data to chart on the product page.
	– Wrong tool clamping	Note minimum shank clamping length. $l_{e\ min}$ = 2 x shank diameter. Do not machine with long or extension chunks. Use short chucks (PM 320 0 53) or shrink-clamping chucks.
	– Incorrectly adjusted tool dimensions	Use a more solid tool with the largest possible shank and tool diameters and shortest working length. Select tool with staggered or spiral cutting edges.
	– Inadequate tool clamping (critical with solid HW tools)	Check chuck clamping area for burrs or dirt.
	– Damage from loose waste pieces	Clamp waste pieces. Hog small pieces when shaping.
	– Machine vibrations	Check machine guide and motor bearings. Check balance of clamping chuck.
Cutting edge breakages on DP (DIA) router bits	– Vibrations of tool spindle	Check balance, contamination and concentricity of the clamping chuck.
	– Vibrations at the workpiece due to insufficient support	Clamp tool as close as possible to the profile. Make vacuum clamping areas as large as possible. Clamp waste pieces.

Continuous wear of cutting edges
Mechanical abrasion causes continuous wear of the cutting edge when machining largely uniform materials.

The degree of permissible wear is determined by the required machined quality. As a standard the width of wear VB of 0.2 up to maximum 0.3 mm should not be exceeded.

Tipped tools must be resharpened in good time to ensure the economic efficiency of the tool.

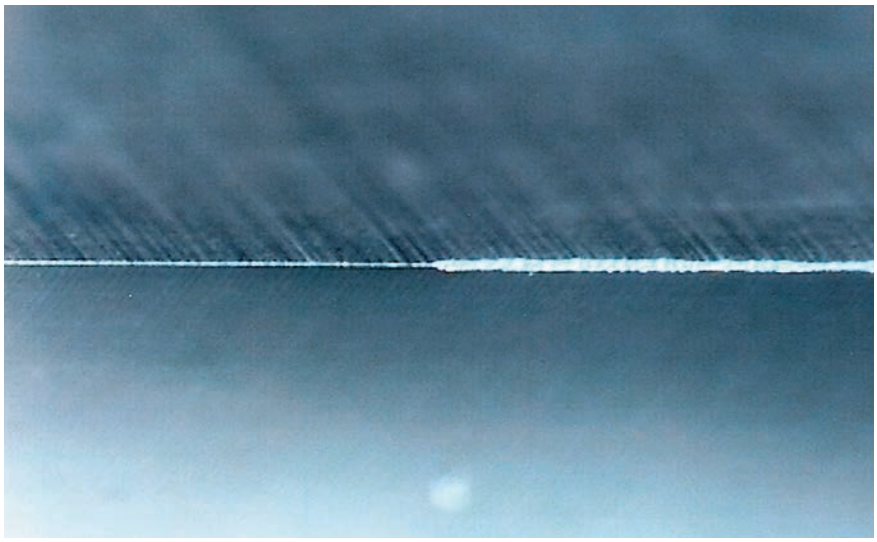

Normal cutting edge wear after machining of spruce.

Local cutting edge wear
Irregular cutting edge wear is caused when machining non-uniform panel materials (e.g. coated chipboard or laminate floors).

The highest abrasion occurs in the area of more densely pressed surface layers with higher sand content. This local abrasion defines the quality of the machined edge and determines the end of the tool life.

If the machining situation allows axial adjustment tool, a sharp section of cutting edge can be used to machine the edge, increasing the tool performance time.

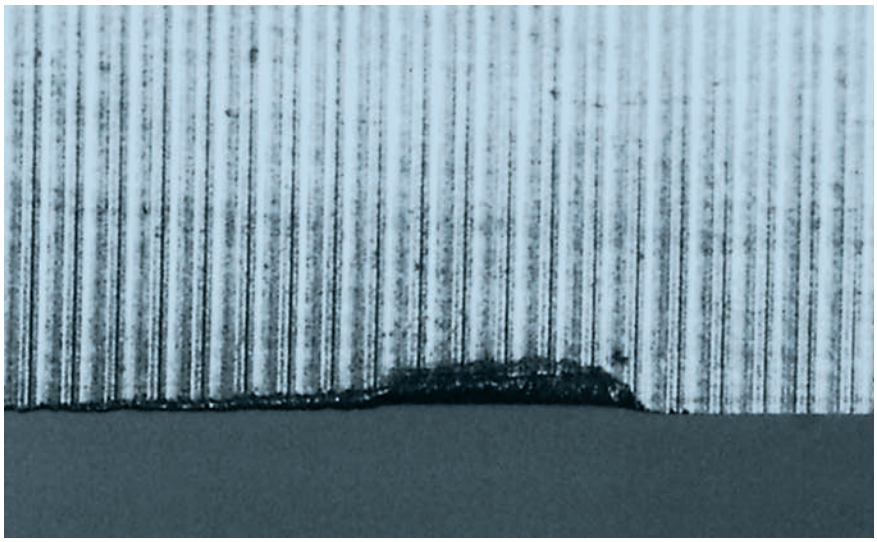

Cutting edge wear after machining chipboard.

Chemical abrasion
When machining materials with a high tannic acid content (e.g. oak) the cutting edge is subject to chemical abrasion in addition to mechanical abrasion.

The cobalt binder material in the tungsten carbide is etched away through chemical abrasion, damaging the cutting material.

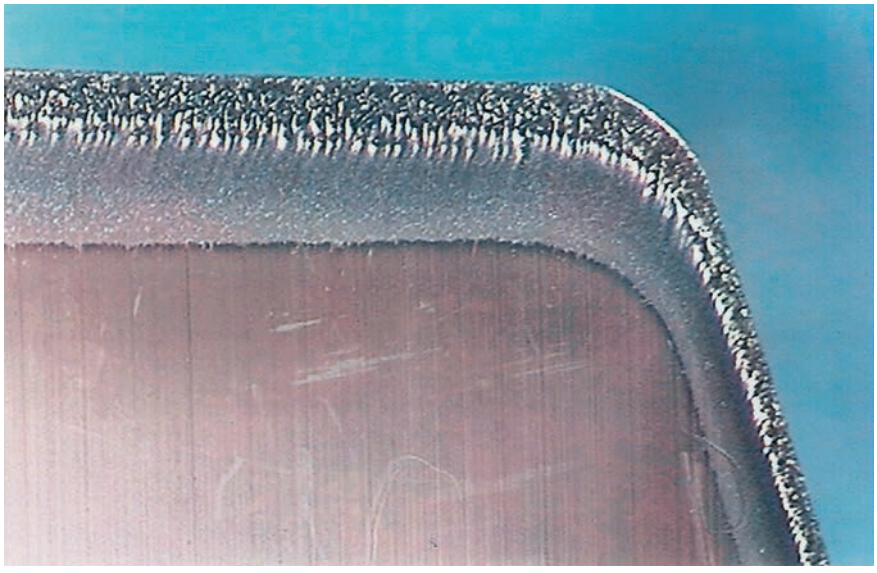

Chemical influence – cutting edge wear – after machining of oak.

Cutting edge wear
Mechanical abrasion causes continuous wear of the cutting edge when machining largely uniform materials.

The degree of the permissible wear is determined by the required machined quality. As a standard the width of wear VB of 0.2 up to maximum 0.3 mm should not be exceeded.

Because of the long performance time, resin can build up on cutting edges.

Performance time can be increased by regular cleaning.

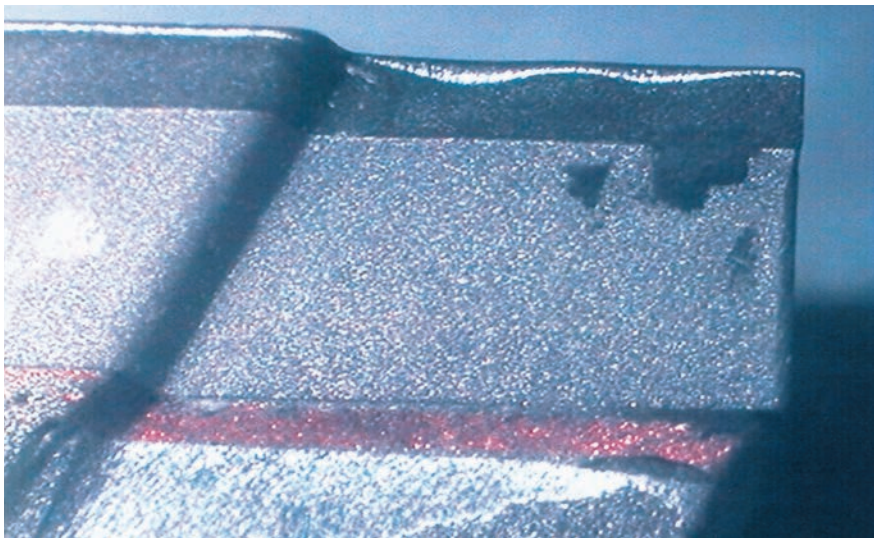

Cutting edge wear after machining GFK.

Cutting edge wear and small fractures
When machining some wood derived and composite materials the cutting edge is damaged by small fractures as well as the usual wear.

This is usually caused by hard mineral particles in the workpiece material.

Fractures at the cutting edge can also be caused by high frequency machine vibrations. Imbalanced tools and chucks, worn spindles or machining close to a resonant RPM may cause such vibrations.

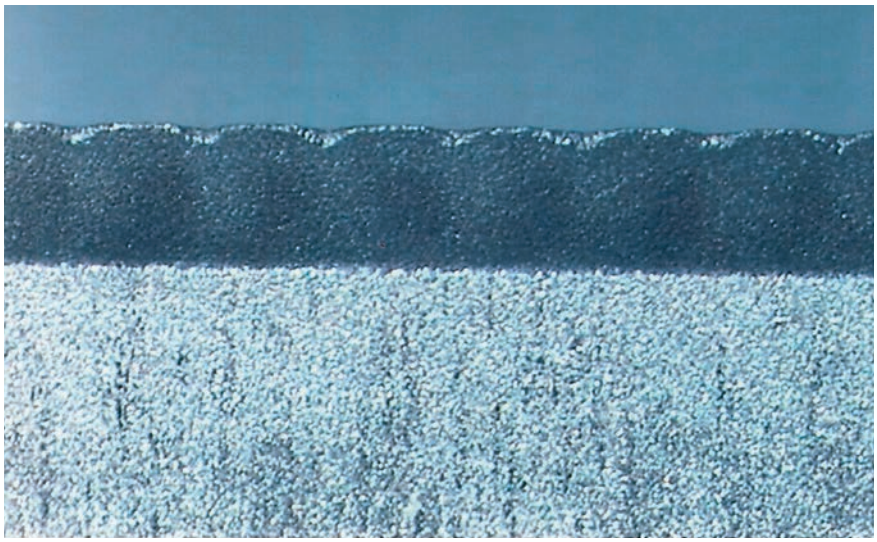

Cutting edge wear and fractures after machining HPL/CPL.

Cutting edge destruction
The cutting edge can be destroyed when machining non-uniform materials containing mineral or metallic particles.

These particles cannot be detected prior to machining and limit the use of DP tools for machining such materials.

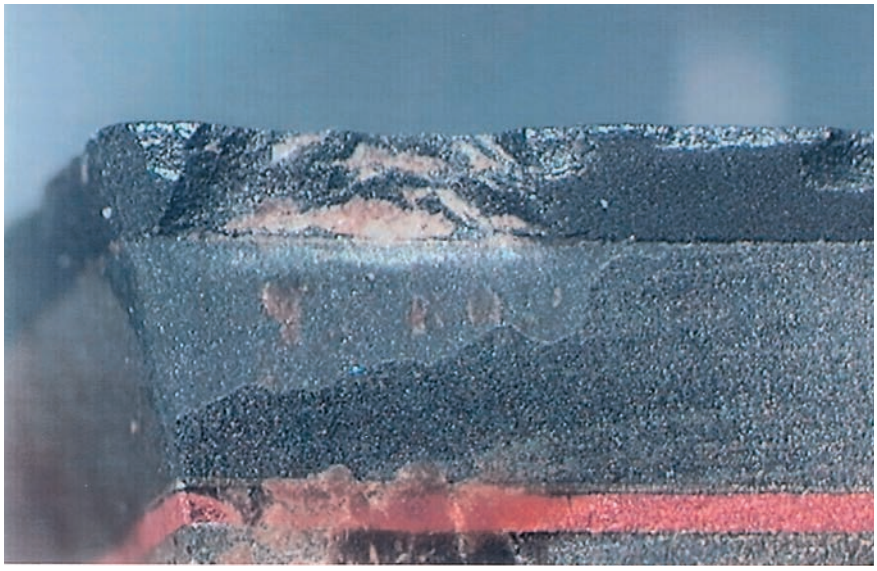

Cutting edge destruction by metallic particles embedded in the workpiece.

Enquiry/order form special tools – routing

Customer details: Customer number: (if known) | ☐ Enquiry ☐ Order | Delivery date: (not binding) CW

Company:

Street:

Post code/place:

Country:

Phone/fax:

Contact person:

Signature:

Date:

Enquiry/order no.:

Tool ID: (if known)

Quantity:

Workpiece material:

Solid wood Type:
Wood-derived material Type:
Other Type:

Direction of machining for solid wood or veneered workpieces:
☐ along grain
☐ across grain

Type of coating:
Additional information:

Machine:

Manufacturer:

Range of RPM: min^{-1}
Adaptor (e.g. SK 30, HSK-F 63 etc.):

Tool:

Tool type (see selection pages):
Dimensions:
Diameter: mm
Cutting width: mm
Shank diameter: mm
No. of teeth:

Cutting material:
☐ HS
☐ HW
☐ ST
☐ DP

Direction of rotation:
☐ left hand
☐ right hand

Type of feed:
☐ Mech. feed
☐ Manual feed

State profile with sketch or drawing:
☐ Cutting on periphery only
☐ Cutting in end grain (ramp plunging possible)
☐ For plunging in z-axis

Arrangement of cutting edges:
☐ with shear angle on one side
☐ with alternate shear angle

☐ Please tick the appropriate box

Examples for profile groups 1 and 2:

WO 521 1
open profile

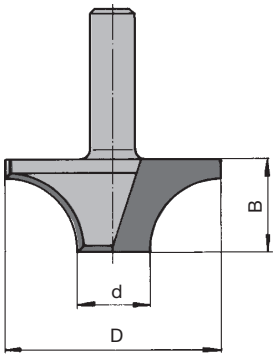

Profile group 1:
cutting on periphery
with bottom knife for
cutting in end grain

WO 522 1
closed profile

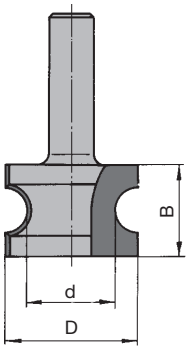

Profile group 1:
cutting on periphery

WO 521 2
open profile

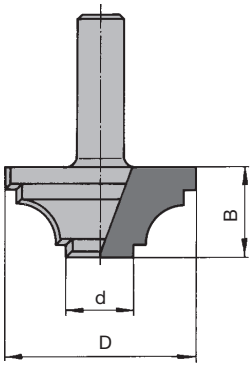

Profile group 2:
cutting on periphery
with bottom knife for
cutting in end grain

WO 522 2
closed profile

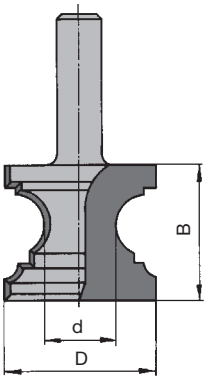

Profile group 2:
cutting on periphery
with bottom knife for
cutting in end grain

Sketch for application plan, profile drawing, special motor spindle etc.
Enter on sketch which side of workpiece to table i.e. face side on top/bottom

Key to pictograms


Drilling
blind holes


Slotting


Spiral drilling


Non-axial drilling


Carving


Grooving,
sizing


Finish sizing


Grooving,
horizontal
and vertical


Jointing


Rebating


Bevelling


Panel raising


Profiling


Profiling
joints


Jointing


Grooving


Slotting,
cut-off milling


Axial
drilling


Engraving


Bevelling


Pocket milling

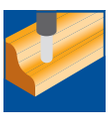
Contour
milling


Ramping



Corner
chamfer 30°



Corner
chamfer 45°


Compression milling,
delamination-free
machining


Machining direction
three-dimensional


Machining direction
three-dimensional



Corner radius


Free neck

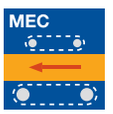

Mechanical
feed



Manual
feed


Solid metal
tool


Tipped tool



Special body
alloy



Light alloy
body


Interchangeable
knives


Mechanical
knife clamping,
reversible


Mechanical
knife clamping,
adjustable
- serrated


Resharpenable
cutting face

Resharpenable
clearance face

Low noise

Optimised
chip flow

Alloyed
tool steel

High-speed
steel

Tungsten
carbide

Polycrystalline
diamond (PCD)

Carbide
metal coating

www.leitz.org

SDZ/MA 05/2025 Subject to changes prior to technical developments. © Leitz GmbH & Co. KG

Drilling

Leitz Lexicon Edition 7 | Version 2 | 02/2025



Explanation of abbreviations

A	=	dimension A
a_e	=	cutting thickness (radial)
a_p	=	cutting depth (axial)
ABM	=	dimension
APL	=	panel raising length
APT	=	panel raising depth
AL	=	working length
AM	=	number of knives
AS	=	anti sound (low noise design)
b	=	overhang
B	=	width
BDD	=	thickness of shoulder
BEM	=	note
BEZ	=	description
BH	=	tipping height
BO	=	bore diameter
CNC	=	Computerized Numerical Control
d	=	diameter
D	=	cutting circle diameter
D0	=	zero diameter
DA	=	outside Diameter
DB	=	diameter of shoulder
DFC	=	Dust Flow Control (optimised chip clearance)
DGL	=	number of links
DIK	=	thickness
DKN	=	double keyway
DP	=	polycrystalline diamond
DRI	=	rotation
FAB	=	width of rebate
FAT	=	depth of rebate
FAW	=	bevel angle
FLD	=	flange diameter
f_z	=	tooth feed
$f_{z\ eff}$	=	effective tooth feed
GEW	=	thread
GL	=	total length
GS	=	Plunging edge
H	=	height
HC	=	tungsten carbide, coated
HD	=	wood thickness (thickness of workpiece)
HL	=	high-alloyed tool steel
HS	=	high-speed steel (HSS)
HW	=	tungsten carbide (TCT)
ID	=	ident number
IV	=	insulation glazing
KBZ	=	abbreviation
KLH	=	clamping height
KM	=	edge breaker
KN	=	single keyway
KNL	=	combination pinhole consists of 2/7/42 2/9/46,35 2/10/60
L	=	length
l	=	clamping length
LD	=	left hand twist
LEN	=	Leitz standard profiles
LH	=	left hand rotation
M	=	metric thread
MBM	=	minimum order quantity
MC	=	multi-purpose steel, coated
MD	=	thickness of knife
min^{-1}	=	revolutions per minute (RPM)
MK	=	morse taper
m min^{-1}	=	metres per minute
m s^{-1}	=	metres per second
n	=	RPM
$n_{max.}$	=	maximum permissible RPM
NAL	=	position of hub
ND	=	thickness of hub
NH	=	zero height
NL	=	cutting length
NLA	=	pinhole dimensions
NT	=	grooving depth
P	=	profile
POS	=	cutter position
PT	=	profile depth
PG	=	profile group
QAL	=	cutting material quality
R	=	radius
RD	=	right hand twist
RH	=	right hand rotation
RP	=	radius of cutter
S	=	shank dimension
SB	=	cutting width
SET	=	set
SLB	=	slotting width
SLL	=	slotting length
SLT	=	slotting depth
SP	=	tool steel
ST	=	Cobalt-basis cast alloys, e.g. Stellite™
STO	=	shank tolerance
SW	=	cutting angle
TD	=	diameter of tool body
TDI	=	thickness of tool
TG	=	pitch
TK	=	reference diameter
UT	=	cutting edges with irregular pitch
V	=	number of spurs
v_c	=	cutting speed
v_f	=	feed speed
VE	=	packing unit
VSB	=	adjustment range
WSS	=	workpiece material
Z	=	number of teeth
ZA	=	number of fingers
ZF	=	tooth shape (cutting edge shape)
ZL	=	finger length

Notes to the Lexicon concerning the diagrams and tables

The statements made in the diagrams and tables relate to specific conditions and represent parameters from tests subjected to defined conditions. Variations when using tools in individual case due to special application conditions may be possible. Our support team will provide you with detailed information.



6. Drilling



6.1 Dowel drilling 2
6.1.1 Dowel drills 4
6.1.2 Dowel drills - Premium 9
6.1.3 Dowel drills - Excellent 10
6.1.4 Boring pins, HW solid 11



6.2 Through hole drilling 12
6.2.1 Through hole drills 13
6.2.2 Through hole drills - Premium 15
6.2.3 Through hole drills - Excellent 16
6.2.4 Through hole drills, DP 17



6.3 Hinge drilling 18
6.3.1 Hinge drills 20
6.3.2 Hinge drills, HW solid 21
6.3.3 Hinge drills, turnblade design 26
6.3.4 Hinge drills, DP 27



6.4 Multi-purpose drilling 28
6.4.1 Twist drills 29
6.4.2 Levin type drills 41
6.4.3 Cylinder head drills 43

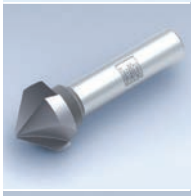

6.5 Countersink 45
6.5.1 Loose countersinks 46
6.5.2 One piece countersinks 49



6.6 Stepped drilling 50
6.6.1 Step drills 51

Troubleshooting 52

Signs of wear 53

Enquiry/order form special tools – drilling 54

Alphabetical product index 56

ID index 57

Application	To drill tear-free dowel holes and blind holes.
Workpiece material	Softwood and hardwood. Chipboard and fibre materials (MDF, HDF etc.), uncoated, plastic coated, veneered etc. Laminated veneer lumber (plywood, multiplex plywood, glued lumber etc.). Plastomers.
Machine	Through feed drilling machines, Point-to-point drilling machines, CNC Machining centres, Hinge boring machines, Special purpose drilling machines.
Design	Two dowel drill designs available:

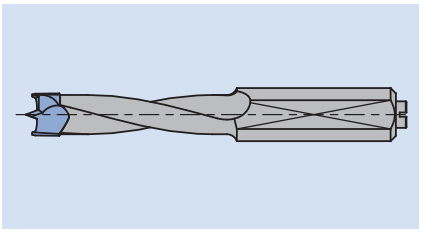

1. Design without heel
Optimised dowel drill for machining panels in the furniture industry.
Minimum friction and feed forces as the flute has a smaller diameter.
A loose countersink can be clamped on the shank.

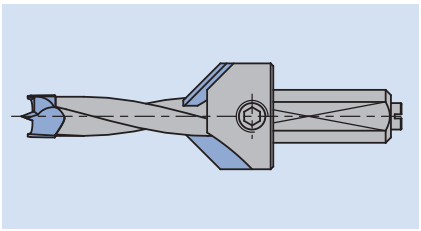

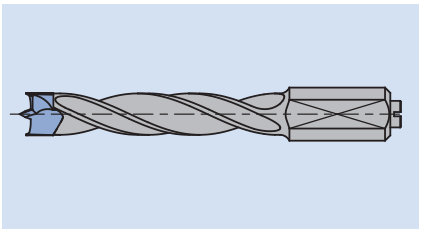

2. Design with heel
Dowel drills with heel are used to drill holes in solid wood and for machines with insufficient guidance during drilling and return stroke. The drill has better guidance during the return stroke to prevent tear-outs at the edge.
A loose countersink can be clamped on the heel and allows adjustment of the drilling and countersink depth.

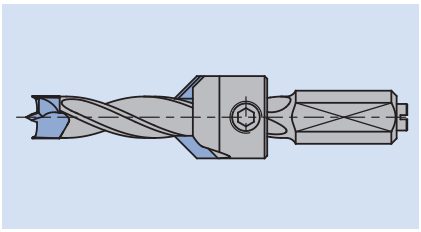

Shank	Dowel drills usually have a shank diameter d = 10 mm. Drilling machines with only a small pitch between the drilling spindles may use dowel drills with a shank diameter d = 8 mm. Additionally, it is possible to mount the dowel drills directly on the drilling spindles with a threaded adaptor. Adaptors are available with different combinations of threads and either cylindrical or tapered seatings. Special shank dimensions available on request.

Technical features

The dimensions listed in the tool tables refer to the following tool parameters:

D	Drill diameter
d	Shank diameter
l	Shank length
NL	Working length = possible drilling depth
GL	Total length of the drill including the projection of the centre point
L	Total length of the drill excluding the projection of the centre point

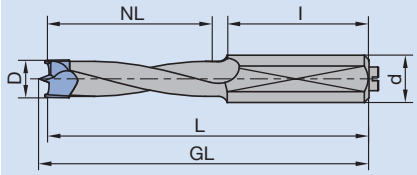

Application data

RPM/feed speeds
The optimum RPM and feed speeds are detailed in the diagrams attached to the tool tables. Identification of the rotation: RH - black; LH - red.

Information

The existing allen screws in the shanks must be replaced by the length setting screw ID **009157** when using dowel drills in Leitz quick-change drill adaptors.

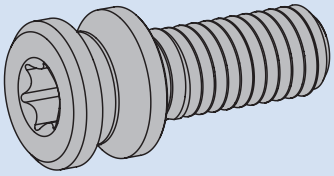

Length setting screw ID **009157** for quick-change clamping adaptor









HW

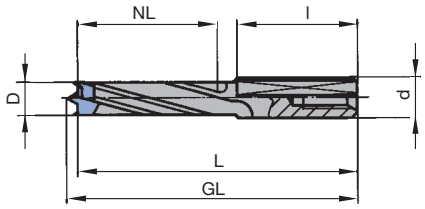

Design with heel

Feed speed v_f depending on the spindle RPM n

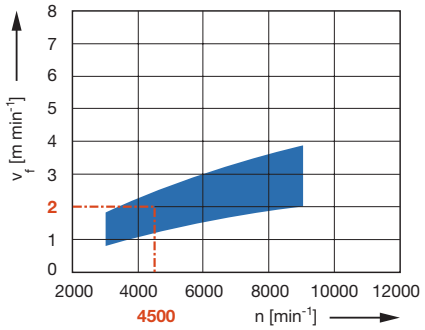

Workpiece material:
Chipboard plastic coated
Operation:
Drilling
Correction factor for v_f:
Veneered = 0.8
Paper coated = 0.8
MDF, solid wood = 0.7
Chipboard, uncoated = 1.3

Shank 8 mm

Application:
For drilling blind holes, particularly dowel holes in furniture construction. Recommended on drill spindles with limited rigidity.

Machine:
Point-to-point drilling machines, through feed drilling machines, CNC machining centres, hinge boring machines, multi spindle units.

Workpiece material:
Softwood and hardwood, chipboard and fibre materials (MDF, HDF etc.), uncoated, plastic coated, veneered etc., laminated veneer lumber (plywood, multiplex plywood etc.).

Technical information:
Spur geometry with shear cut. Drills can be combined with countersink WB 701 0 03. Countersink fixed on heel. Continuously adjustable boring and countersink depth. Good guidance on return stroke for tear-free holes.

GL 55.5 mm, with heel, Z 2 / V 2
WB 120 0 23

D mm	GL mm	L mm	NL mm	S mm	ID LH	ID RH
5	55,5	54	30	8x19	**042552** ●	**042553** ●
6	55,5	54	30	8x19		**042555** ●
8	55,5	53,5	30	8x19	**042558** ●	**042559** ●
10	55,5	53,5	30	8x21		**042563** ●

GL 67 mm, with heel, Z 2 / V 2
WB 120 0 24

D mm	GL mm	L mm	NL mm	S mm	ID LH	ID RH
5	67	65,5	40	8x19	**042568** ●	**042569** ●
6	67	65,5	40	8x19	**042570** ●	**042571** ●
7	67	65,5	40	8x19		**042573** ●
8	67	65	40	8x19	**042574** ●	**042575** ●
10	67	65	40	8x21		**042579** ●

RPM: n = 3000 - 9000 min^{-1}

Spare parts:

BEZ	ABM mm	BEM	ID
Allen screw	M5x10	Length adjustment	**005802** ●
Anti-twist allen screw	M5x10	Length adjustment	**007438** ●

● available ex stock
□ available at short notice
Instruction manual visit www.leitz.org









HW

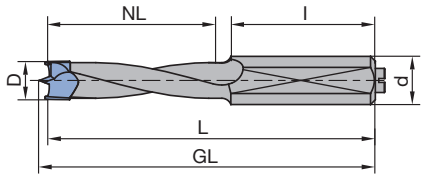

Design without heel

Feed speed v_f depending on the spindle RPM n

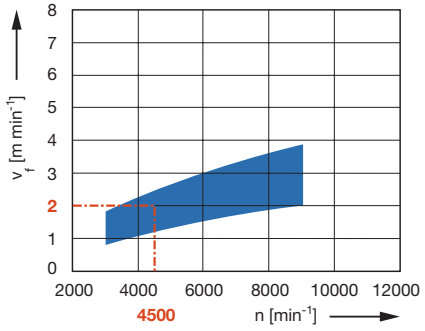

Workpiece material:
Chipboard plastic coated
Operation:
Drilling
Correction factor for v_f:
Veneered = 0.8
Paper coated = 0.8
MDF, solid wood = 0.7
Chipboard, uncoated = 1.3

Shank 10 mm

Application:
For drilling blind holes, particularly dowel holes in furniture construction.

Machine:
Point-to-point drilling machines, through feed drilling machines, CNC machining centres, hinge boring machines, multi spindle units.

Workpiece material:
Softwood and hardwood, chipboard and fibre materials (MDF, HDF etc.), uncoated, plastic coated, veneered etc., laminated veneer lumber (plywood, multiplex plywood etc.).

Technical information:
Spur geometry with shear cut. Recessed flute for minimised friction and feed force. Drills can be combined with countersink WB 701 0 02. Countersinks can be clamped on the shank.

GL 57.5 mm, without heel, Z 2 / V 2
WB 120 0 12, WB 120 0 32

D	GL	L	NL	S	ID	ID
mm	mm	mm	mm	mm	LH	RH
3	57,5	56	25	10x25	**033788** ●	**033789** ●
3,18	57,5	56	25	10x27		**033701** ●
4	57,5	56	25	10x27	**033670** ●	**033671** ●
4,5	57,5	56	25	10x27	**033710** ●	**033711** ●
5	57,5	56	25	10x27	**033672** ●	**033673** ●
5,1	57,5	56	25	10x27		**033675** ●
5,2	57,5	56	25	10x27		**033677** ●
6	57,5	56	25	10x27	**033678** ●	**033679** ●
7	57,5	56	25	10x27	**033680** ●	**033681** ●
8	57,5	55,5	25	10x27	**033682** ●	**033683** ●
8,2	57,5	55,5	25	10x27	**033686** ●	**033687** ●
9	57,5	55,5	25	10x27	**033688** ●	**033689** ●
10	57,5	55,5	25	10x27	**033690** ●	**033691** ●
12	57,5	55,5	30	10x22	**033692** ●	**033693** ●
15	57,5	55,5	30	10x22	**033696** ●	**033697** ●
16	57,5	55,5	30	10x22		**033699** ●

GL 70 mm, without heel, Z 2 / V 2
WB 120 0 10

D	GL	L	NL	S	ID	ID
mm	mm	mm	mm	mm	LH	RH
4	70	68,5	35	10x30	**033476** ●	**033477** ●
5	70	68,5	35	10x30	**033440** ●	**033441** ●
6	70	68,5	35	10x30	**033442** ●	**033443** ●
7	70	68,5	35	10x30	**033444** ●	**033445** ●
8	70	68	35	10x30	**033446** ●	**033447** ●
9	70	68	35	10x30	**033478** ●	**033479** ●
10	70	68	35	10x30	**033448** ●	**033449** ●
11	70	68	35	10x30	**033480** ●	**033481** ●
12	70	68	35	10x30	**033450** ●	**033451** ●
13	70	68	35	10x30	**033452** ●	**033453** ●
14	70	68	35	10x30	**033454** ●	**033455** ●
16	70	67,5	35	10x30	**033456** ●	**033457** ●

GL 77 - 78.5 mm, without heel, Z 2 / V 2
WB 120 0 07

D mm	GL mm	L mm	NL mm	S mm	ID LH	ID RH
5	78,5	77	45	10x30	**033370** ●	**033371** ●
6	78,5	77	45	10x30	**033372** ●	**033373** ●
7	78,5	77	45	10x30	**033374** ●	**033375** ●
8	77	75,5	45	10x30	**033376** ●	**033377** ●
10	77	75	45	10x30	**033378** ●	**033379** ●
12	77	75	45	10x30	**033380** ●	**033381** ●

RPM: n = 3000 - 9000 min^{-1}

Spare parts:

BEZ	ABM mm	BEM	ID
Allen screw	M5x10	Length adjustment	**005802** ●
Anti-twist allen screw	M5x10	Length adjustment	**007438** ●
Length adjustment screw Torx® 20	M5x17	for quick-change drill adaptors	**009157** ●

● available ex stock
□ available at short notice
Instruction manual visit www.leitz.org









HW

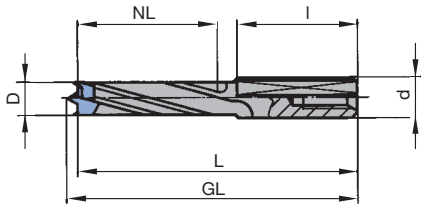

Design with heel

Feed speed v_f depending on the spindle RPM n

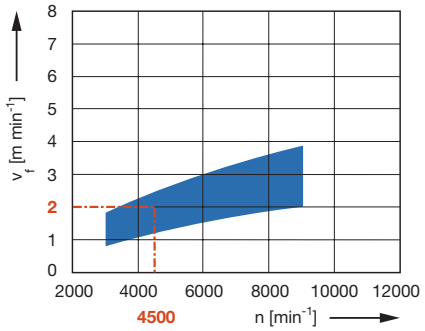

Workpiece material:
Chipboard plastic coated
Operation:
Drilling
Correction factor for v_f:
Veneered = 0.8
Paper coated = 0.8
MDF, solid wood = 0.7
Chipboard, uncoated = 1.3

Shank 10 mm

Application:
For drilling blind holes, particularly dowel holes in furniture construction. Recommended on drill spindles with limited rigidity.

Machine:
Point-to-point drilling machines, through feed drilling machines, CNC machining centres, hinge boring machines, multi spindle units.

Workpiece material:
Softwood and hardwood, chipboard and fibre materials (MDF, HDF etc.), uncoated, plastic coated, veneered etc., laminated veneer lumber (plywood, multiplex plywood etc.).

Technical information:
Spur geometry with shear cut. Drills can be combined with countersink WB 701 0 03. Countersink fixed on heel. Continuously adjustable boring and countersink depth. Good guidance on return stroke for tear-free holes.

GL 70 mm, with heel, Z 2 / V 2
WB 120 0 25, WB 120 0 26

D mm	GL mm	L mm	NL mm	S mm	ID LH	ID RH
5	70	68,5	43	10x19	**042586** ●	**042587** ●
6	70	68,5	43	10x19	**042588** ●	**042589** ●
8	70	68	43	10x19	**042590** ●	**042591** ●
10	70	68	43	10x19	**042592** ●	**042593** ●
12	70	68	43	10x19	**042594** ●	**042595** ●
25	70	68	40	10x25		**042610** ●

RPM: n = 3000 - 9000 min^{-1}

Note:
ID **042610** for holes in window manufacture.

Spare parts:

BEZ	ABM mm	BEM	ID
Allen screw	M5x10	Length adjustment	**005802** ●
Anti-twist allen screw	M5x10	Length adjustment	**007438** ●
Length adjustment screw Torx® 20	M5x17	for quick-change drill adaptors	**009157** ●









HW

Boring bit mounted in reducing chucks

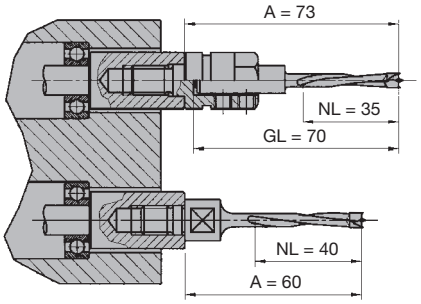

Boring bit with threaded shank mounted directly in the boring spindle
Length comparison: Dowel drills with threaded shank have a deeper boring depth than a comparable boring bit with cylindrical shank mounted in drill adaptors while having a lower overhang A with regard to the boring spindle.

Feed speed v_f depending on the spindle RPM n

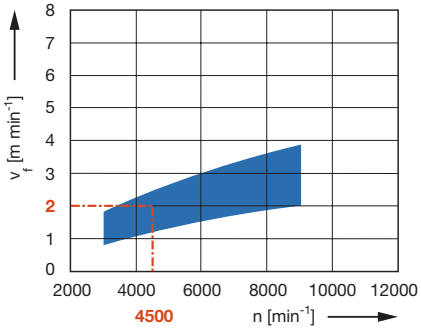

Threaded shank

Application:
For drilling blind holes, particularly dowel holes in furniture construction.

Machine:
Point-to-point drilling machines, through feed drilling machines, CNC machining centres, hinge boring machines, multi spindle units.

Workpiece material:
Softwood and hardwood, chipboard and fibre materials (MDF, HDF etc.), uncoated, plastic coated, veneered etc., laminated veneer lumber (plywood, multiplex plywood etc.).

Technical information:
Spur geometry with shear cut. Recessed flute for minimised friction and feed force. Threaded shank for direct mounting in the drilling spindle.

M10, threaded shank with seating 11 mm, without heel, Z 2 / V 2
WB 120 0 17

D	GL	NL	A	S	ID	ID
mm	mm	mm	mm	mm	LH	RH
5	75	40	60	M10	**035200** ●	**035201** ●
8	75	40	60	M10	**035204** ●	**035205** ●

M10, threaded shank, without heel, Z 2 / V 2
WB 120 0 18

D	GL	NL	A	S	ID	ID
mm	mm	mm	mm	mm	LH	RH
5	78	43	63	M10	**035260** ●	**035261** ●
8	78	43	63	M10	**035264** ●	**035265** ●

RPM: n = 3000 - 9000 min^{-1}

Workpiece material:
Chipboard plastic coated
Operation:
Drilling
Correction factor for v_f:
Veneered = 0.8
Paper coated = 0.8
MDF, solid wood = 0.7
Chipboard, uncoated = 1.3

● available ex stock
□ available at short notice
Instruction manual visit www.leitz.org








HW

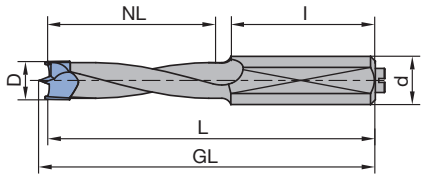

Design without heel

Feed speed v_f depending on the spindle RPM n

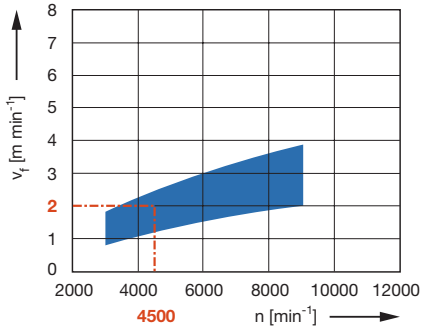

Workpiece material:
Chipboard plastic coated
Operation:
Drilling
Correction factor for v_f:
Veneered = 0.8
Paper coated = 0.8
MDF, solid wood = 0.7

Shank 10 mm, HW tipped

Application:
For drilling blind holes, particularly dowel holes in furniture construction. Suitable for drilling tear-free blind holes in visible areas and for machining panel materials which are covered with laminations difficult to machine (e.g. thin decorative paper).

Machine:
Point-to-point drilling machines, through feed drilling machines, CNC machining centres, hinge boring machines, multi spindle units.

Workpiece material:
Softwood and hardwood, chipboard and fibre materials (MDF, HDF etc.), uncoated, plastic coated, veneered etc., laminated veneer lumber (plywood, multiplex plywood etc.).

Technical information:
Spur geometry with high shear cut. High wear resistant tungsten carbide grade for maximum life time. Drills can be combined with countersink WB 701 0 02. Countersinks can be clamped on the shank. Recessed flute for minimised friction and feed forces.

GL 57.5 mm, Z 2 / V 2
WB 120 0 29

D mm	GL mm	L mm	NL mm	S mm	ID LH	ID RH
4	57,5	56	25	10x27		**033715** ●
5	57,5	56	25	10x27	**033716** ●	**033717** ●
6	57,5	56	25	10x27	**033718** ●	**033719** ●
8	57,5	55,5	25	10x27	**033720** ●	**033721** ●
10	57,5	55,5	25	10x27	**033722** ●	**033723** ●

GL 70 mm, Z 2 / V 2
WB 120 0 30

D mm	GL mm	L mm	NL mm	S mm	ID LH	ID RH
4	70	68,5	35	10x30	**033482** ●	**033483** ●
5	70	68,5	35	10x30	**033484** ●	**033485** ●
5,1	70	68,5	35	10x30	**033492** ●	**033493** ●
6	70	68,5	35	10x30	**033486** ●	**033487** ●
8	70	68,5	35	10x30	**033488** ●	**033489** ●
8,2	70	68,5	35	10x30	**033494** ●	**033495** ●
10	70	68,5	35	10x30	**033490** ●	**033491** ●

RPM: n = 3000 - 9000 min^{-1}

Spare parts:

BEZ	ABM mm	BEM	ID
Allen screw	M5x10	Length adjustment	**005802** ●
Anti-twist allen screw	M5x10	Length adjustment	**007438** ●
Length adjustment screw Torx® 20	M5x17	for quick-change drill adaptors	**009157** ●








HW

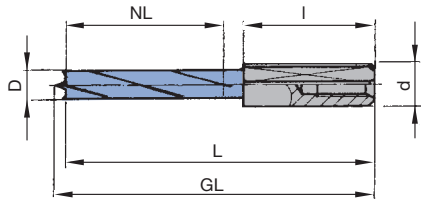

Design without heel

Feed speed v_f depending on the spindle RPM n

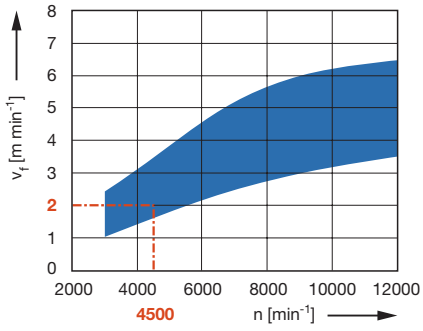

Workpiece material:
Chipboard plastic coated
Operation:
Drilling
Correction factor for v_f:
Veneered = 0.8
Paper coated = 0.8
MDF, solid wood = 0.7
Chipboard, uncoated = 1.3

Shank 10 mm, HW solid

Application:
For drilling blind holes, particularly dowel holes in furniture construction. Suitable for drilling tear-free blind holes in visible areas and for machining panel materials which are covered with laminations difficult to machine (e.g. thin decorative paper).

Machine:
Point-to-point drilling machines, through feed drilling machines, CNC machining centres, hinge boring machines, multi spindle units.

Workpiece material:
Softwood and hardwood, chipboard and fibre materials (MDF, HDF etc.), uncoated, plastic coated, veneered etc., laminated veneer lumber (plywood, multiplex plywood etc.).

Technical information:
Spur geometry with high shear cut. Solid tungsten carbide design with high wear resistant tungsten carbide grade. High stability and long performance time. Polished gullet for minimum friction and feed forces. Very large resharpening area.

GL 57.5 mm, Z 2 / V 2
WB 120 0 32

D mm	GL mm	L mm	NL mm	S mm	ID LH	ID RH
3	57,5	56	25	10x25	**033788** ●	**033789** ●
4	57,5	56	25	10x25	**033784** ●	**033785** ●
5	57,5	56	25	10x25	**033728** ●	**033729** ●
6	57,5	56	25	10x25	**033730** ●	**033731** ●
8	57,5	56	25	10x25	**033732** ●	**033733** ●
10	57,5	55,5	25	10x25	**033786** ●	**033787** ●

GL 70 mm, Z 2 / V 2
WB 120 0 33

D mm	GL mm	L mm	NL mm	S mm	ID LH	ID RH
3	70	68,5	25	10x25	**033550** ●	**033551** ●
4	70	68,5	35	10x25	**033542** ●	**033543** ●
5	70	68,5	35	10x25	**033496** ●	**033497** ●
6	70	68,5	35	10x25	**033498** ●	**033499** ●
7	70	68,5	35	10x25	**033548** ●	**033549** ●
8	70	68,5	35	10x25	**033500** ●	**033501** ●
10	70	68	35	10x25	**033540** ●	**033541** ●

RPM: n = 3000 - 12000 min^{-1}

Spare parts:

BEZ	for S mm	ABM mm	BEM	ID
Allen screw	10x27	M5x8	Length adjustment	**006378** ●
Allen screw	10x34/45	M5x10	Length adjustment	**005802** ●
Anti-twist allen screw		M5x10	Length adjustment	**007438** ●
Length adjustment screw Torx® 20		M5x17	for quick-change drill adaptors	**009157** ●

● available ex stock
□ available at short notice
Instruction manual visit www.leitz.org








HW

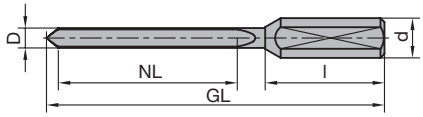

Boring pin WB 100 0 01

Feed speed v_f depending on the spindle RPM n

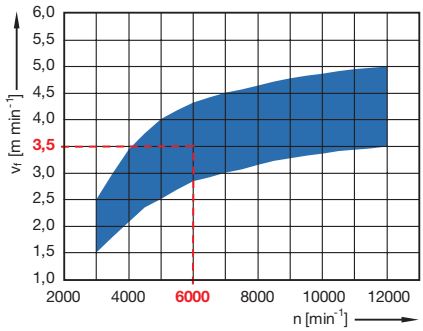

Workpiece material:
Chipboard / MDF
Operation:
Horizontal edge drilling

Shank 10 mm

Application:
For drilling blind holes, particularly dowel holes on the side of panel furniture parts.

Machine:
Point-to-point drilling machines, through feed drilling machines, CNC machining centres, hinge boring machines, multi spindle units.

Workpiece material:
Softwood and hardwood, chipboard and fibre materials (MDF, HDF etc.), uncoated, plastic coated, veneered etc., laminated veneer lumber (plywood, multiplex plywood etc.).

Technical information:
Solid tungsten carbide design for high performance time. Large resharpening area. Tool suitable for RH and LH rotation. Drill design D = 3 mm particularly suitable for pre-drilling screw holes in plastic coated and veneered furniture parts. Infeed depth in hardwood and glulam maximum 2 x D.

GL 57.5 / GL 70 mm, Z 1/1
WB 100 0 01

D mm	GL mm	NL mm	S mm	DRI	ID
3	57,5	25	10x27	LH, RH	**230200** ●
3	70	35	10x27	LH, RH	**230201** ●
5	70	35	10x27	LH, RH	**230208** ●
6	70	35	10x27	LH, RH	**230209** ●
8	70	35	10x27	LH, RH	**230210** ●
5	57,5	25	10x27	LH, RH	**230211** ●
6	57,5	25	10x27	LH, RH	**230212** ●
8	57,5	25	10x27	LH, RH	**230213** ●

GL 85 mm, Z 1/1
WB 100 0 01

D mm	GL mm	NL mm	S mm	DRI	ID
5	85	45	10x30	LH, RH	**230202** ●
8	85	45	10x30	LH, RH	**230204** ●

GL 105 mm, Z 1/1
WB 100 0 01

D mm	GL mm	NL mm	S mm	DRI	ID
5	105	65	10x30	LH, RH	**230205** ●
8	105	65	10x30	LH, RH	**230207** ●

RPM: n = 3000 - 9000 min^{-1}

Note:
When using the bore pins in hardwood and glulam, the potential bore depth is restricted. Interim chip removal (return stroke) then is obligatory.
Boring pins require more power compared to dowel drills. The maximum number of boring pins, used in one drilling unit, depends on the power of the machine.

Spare parts:

BEZ	for S mm	ABM mm	BEM	ID
Allen screw	10x27	M5x8	Length adjustment	**006378** ●
Allen screw	10x30	M5x10	Length adjustment	**005802** ●
Anti-twist allen screw		M5x10	Length adjustment	**007438** ●
Length adjustment screw Torx® 20		M5x17	for quick-change drill adaptors	**009157** ●

● available ex stock
□ available at short notice
Instruction manual visit www.leitz.org

6.2 Through hole drilling

Application

To drill tear-free through holes in panels.

Workpiece material

Softwood and hardwood.
Chipboard and fibre materials (MDF, HDF etc.), uncoated, plastic coated, veneered etc.
Laminated veneer lumber (plywood, multiplex plywood, glued lumber etc.).
Plastomers.

Machine

Through feed drilling machines,
Point-to-point drilling machines,
CNC machining centres,
Hinge boring machines,
Special purpose drilling machines.

Design

Two available through hole drill designs:

1. Design without heel
Optimised through hole drill for machining panels in the furniture industry. Minimum friction and feed forces as the flute has a smaller diameter. A loose countersink can be clamped on the shank.

2. Design with heel
Through hole drills with heel are used to drill holes in solid wood and for machines with insufficient guidance during drilling and return stroke. The drill has better guidance during the return stroke to prevent tear-outs at the edge. A loose countersink can be clamped on the heel and allows adjustment of the drilling and countersink depth.

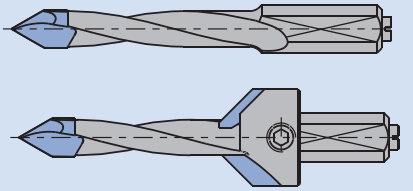
1

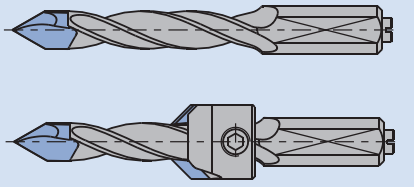
2

Shank

Through hole drills usually have a shank diameter d = 10 mm. Drilling machines with a small pitch between the drilling spindles may use drills with a shank diameter d = 8 mm.

Technical features

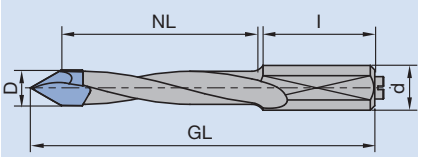

The dimensions listed in the tool tables refer to the following tool parameters:

D	Drill diameter
d	Shank diameter
l	Shank length
NL	Working length = possible drilling depth
GL	Total length of the drill

Application data

RPM/feed rates
The optimum RPM and feed speeds are detailed in the diagrams attached to the tool tables.
Identification of rotation: RH - black; LH - red.

Application recommendation

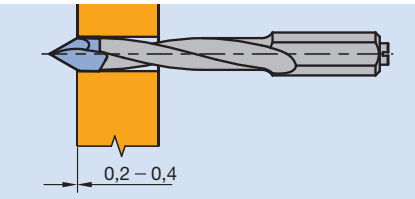

The drilling quality in brittle or low-adhesive surfaces can be improved when the feed speed is reduced as the drill breaks through the workpiece.









HW

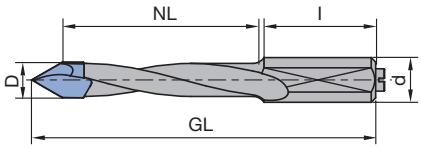

Design without heel

Feed speed v_f depending on the spindle RPM n

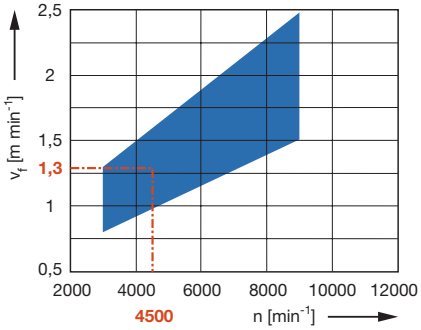

Workpiece material:
Chipboard plastic coated
Operation:
Drilling
Correction factor for v_f:
Veneered = 0.8
MDF = 0.7
Chipboard, uncoated = 1.3

Shank 10 mm

Application:
For drilling through holes, particularly in furniture construction.

Machine:
Point-to-point drilling machines, through feed drilling machines, CNC machining centres, hinge boring machines, multi spindle units.

Workpiece material:
Softwood and hardwood, chipboard and fibre materials (MDF, HDF etc.), uncoated, plastic coated, veneered etc., laminated veneer lumber (plywood, multiplex plywood etc.), elastomers.

Technical information:
Drills can be combined with countersink WB 701 0 02. Countersinks can be clamped on the shank. Recessed flute for minimised friction and feed forces.

GL 57.5 mm, without heel, Z 2
WB 101 0 02

D mm	GL mm	NL mm	S mm	ID LH	ID RH
5	57,5	25	10x24	**034000** ●	**034001** ●
6	57,5	25	10x24		**034009** ●
8	57,5	25	10x24	**034002** ●	**034003** ●

GL 70 mm, without heel, Z 2
WB 101 0 07

D mm	GL mm	NL mm	S mm	ID LH	ID RH
5	70	35	10x24	**034074** ●	**034075** ●
7	70	35	10x24	**034106** ●	**034107** ●
8	70	35	10x24	**034076** ●	**034077** ●
9	70	35	10x24	**034108** ●	**034109** ●
10	70	35	10x24	**034110** ●	**034111** ●

GL 77 mm, without heel, Z 2
WB 101 0 03

D mm	GL mm	NL mm	S mm	ID LH	ID RH
5	77	44	10x24	**034060** ●	**034061** ●
6	77	44	10x24	**034068** ●	**034069** ●
8	77	44	10x24	**034062** ●	**034063** ●
10	77	44	10x24	**034070** ●	**034071** ●
12	77	44	10x24	**034072** ●	**034073** ●

RPM: n = 3000 - 9000 min^{-1}

For diameters below 5 mm use type WB 101 0 04.

Spare parts:

BEZ	ABM mm	BEM	ID
Allen screw	M5x10	Length adjustment	**005802** ●
Anti-twist allen screw	M5x10	Length adjustment	**007438** ●
Length adjustment screw Torx® 20	M5x17	for quick-change drill adaptors	**009157** ●

● available ex stock
□ available at short notice
Instruction manual visit www.leitz.org









HW

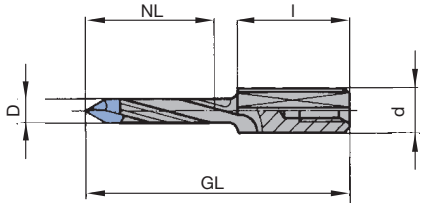

Design with heel

Feed speed v_f depending on the spindle RPM n

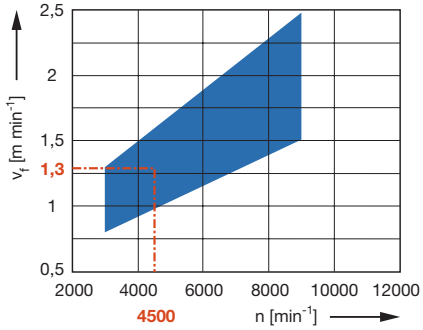

Workpiece material:
Chipboard plastic coated
Operation:
Drilling
Correction factor for v_f:
Veneered = 0.8
MDF = 0.7
Chipboard, uncoated = 1.3

Shank 10 mm

Application:
For drilling through holes, particularly in furniture construction. Recommended on drill spindles with limited rigidity

Machine:
Point-to-point drilling machines, through feed drilling machines, CNC machining centres, hinge boring machines, multi spindle units.

Workpiece material:
Softwood and hardwood, chipboard and fibre materials (MDF, HDF etc.), uncoated, plastic coated, veneered etc., laminated veneer lumber (plywood, multiplex plywood etc.), elastomers.

Technical information:
Drills can be combined with countersink WB 701 0 03. Countersinks fixed on heel. Continuously adjustable boring and countersink depth. Good guidance on return stroke for tear-free holes.

GL 57.5 mm, with heel, Z 2
WB 101 0 05

D mm	GL mm	NL mm	S mm	ID LH	ID RH
5	57,5	25	10x24	**042630** ●	**042631** ●

GL 77 mm, with heel, Z 2
WB 101 0 06

D mm	GL mm	NL mm	S mm	ID LH	ID RH
5	77	44	10x24	**042640** ●	**042641** ●
5,2	77	44	10x24	**042644** ●	**042645** ●
6	77	44	10x24		**042647** ●
8	77	44	10x24	**042648** ●	**042649** ●
10	77	44	10x24		**042651** ●
12	77	44	10x24		**042653** ●

RPM: n = 3000 - 9000 min^{-1}

For diameters below 5 mm use type WB 101 0 04.

Spare parts:

BEZ	ABM mm	BEM	ID
Allen screw	M5x10	Length adjustment	**005802** ●
Anti-twist allen screw	M5x10	Length adjustment	**007438** ●
Length adjustment screw Torx® 20	M5x17	for quick-change drill adaptors	**009157** ●

● available ex stock
□ available at short notice
Instruction manual visit www.leitz.org









HW

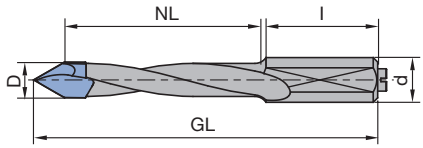

Design without heel

Feed speed v_f depending on the spindle RPM n

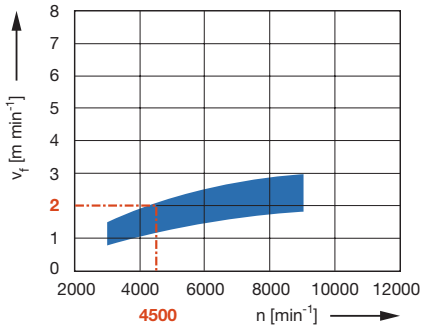

Workpiece material:
Chipboard plastic coated
Operation:
Drilling
Correction factor for v_f:
Veneered = 0.8
MDF, solid wood = 0.7
Chipboard, uncoated = 1.3

Shank 10 mm, HW tipped

Application:
For drilling tear-free through holes, particularly in furniture construction, with maximised quality on the bottom side (exit).

Machine:
Point-to-point drilling machines, through feed drilling machines, CNC machining centres, hinge boring machines, multi spindle units.

Workpiece material:
Softwood and hardwood, chipboard and fibre materials (MDF, HDF etc.), uncoated, plastic coated, veneered etc., laminated veneer lumber (plywood, multiplex plywood etc.).

Technical information:
V-point tip with 2 bevels for maximised quality on the bottom side (exit). High wear resistant tungsten carbide grade for maximum lifetime. Drills can be combined with countersink WB 701 0 02. Countersinks can be clamped on the shank. Recessed flute for minimised friction and feed forces.

GL 57.5 mm, Z 2
WB 101 0 10

D mm	GL mm	NL mm	S mm	ID LH	ID RH
5	57,5	25	10x25	**033960** ●	**033961** ●
8	57,5	25	10x25	**033962** ●	**033963** ●

GL 70 mm, Z 2
WB 101 0 10

D mm	GL mm	NL mm	S mm	ID LH	ID RH
5	70	35	10x25	**033964** ●	**033965** ●
8	70	35	10x25	**033966** ●	**033967** ●

RPM: n = 3000 - 9000 min^{-1}
(recommended n = 4500 - 9000 min^{-1})

Spare parts:

BEZ	ABM mm	BEM	ID
Allen screw	M5x10	Length adjustment	**005802** ●
Anti-twist allen screw	M5x10	Length adjustment	**007438** ●
Length adjustment screw Torx® 20	M5x17	for quick-change drill adaptors	**009157** ●









HW

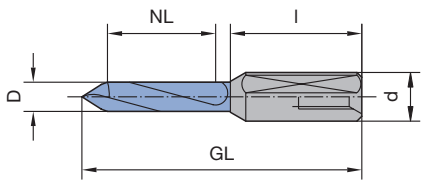

Design without heel

Feed speed v_f depending on the spindle RPM n

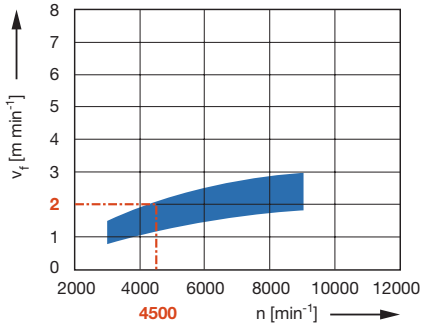

Workpiece material:
Chipboard plastic coated
Operation:
Drilling
Correction factor for v_f:
Veneered = 0.8
MDF, solid wood = 0.7
Chipboard, uncoated = 1.3

Shank 10 mm, HW solid

Application:
For drilling tear-free through holes, particularly in furniture construction, with maximised quality on the bottom side (exit).

Machine:
Point-to-point drilling machines, through feed drilling machines, CNC machining centres, hinge boring machines, multi spindle units.

Workpiece material:
Softwood and hardwood, chipboard and fibre materials (MDF, HDF etc.), uncoated, plastic coated, veneered etc., laminated veneer lumber (plywood, multiplex plywood etc.).

Technical information:
V-point tip with 2 bevels for maximised quality on the bottom side (exit). Solid tungsten carbide design with high wear resistant tungsten carbide grade. High stability and long performance time. Polished gullet for minimum friction and feed forces. Very large resharpening area.

GL 57.5 mm, without heel, Z 2
WB 101 0 02

D mm	GL mm	NL mm	S mm	ID LH	ID RH
5	57,5	25	10x25	**034018** ●	**034019** ●
6	57,5	25	10x25	**034020** ●	**034021** ●
8	57,5	25	10x25	**034022** ●	**034023** ●

GL 70 mm, without heel, Z 2
WB 101 0 07

D mm	GL mm	NL mm	S mm	ID LH	ID RH
3	70	27	10x25	**035493** ●	**035492** ●
5	70	35	10x25	**034100** ●	**034101** ●
6	70	35	10x25	**034102** ●	**034103** ●
7	70	35	10x25	**034117** ●	**034118** ●
8	70	35	10x25	**034104** ●	**034105** ●
10	70	35	10x25	**034114** ●	**034115** ●

GL 100 mm, without heel, Z 2
WB 101 0 07

D mm	GL mm	NL mm	S mm	DRI	ID
6	100	35	10x57	RH	**034116** ●

RPM: n = 3000 - 12000 min^{-1}

For diameters below 5 mm use type WB 101 0 04.

Spare parts:

BEZ	for S mm	ABM mm	BEM	ID
Allen screw	10x22/25/27	M5x8	Length adjustment	**006378** ●
Allen screw	10x57	M5x10	Length adjustment	**005802** ●
Anti-twist allen screw		M5x10	Length adjustment	**007438** ●
Length adjustment screw Torx® 20		M5x17	for quick-change drill adaptors	**009157** ●

● available ex stock
□ available at short notice
Instruction manual visit www.leitz.org





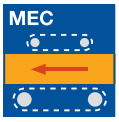



DP

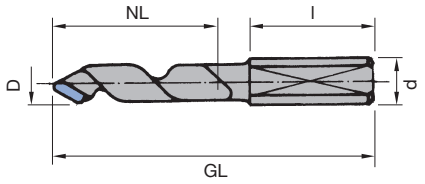

WB 100 0 50

Feed speed v_f depending on the spindle RPM n

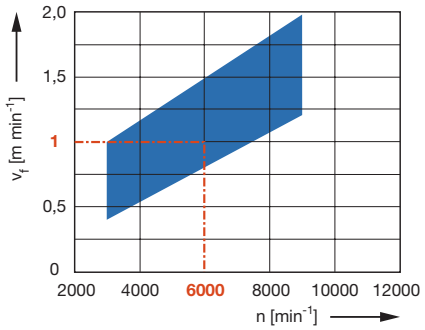

Workpiece material:
Chipboard plastic coated
Operation:
Drilling
Correction factor for v_f:
MDF = 0.7
Chipboard, uncoated = 1.2

Shank 10 mm

Application:
For drilling tear-free through holes. Particularly suitable for drilling panel materials with abrasive components (fire proof material etc.).

Machine:
Point-to-point drilling machines, through feed drilling machines, CNC machining centres, hinge boring machines, multi spindle units.

Workpiece material:
Gypsum bonded particle and fibre materials, cement bonded particle and fibre materials, flame resistant particle and fibre materials, solid resin glulam, fibre reinforced plastics.

Technical information:
DP tipped through hole boring bit for maximum lifetime, particularly in abrasive materials. Large gullet for optimum chip removal.

GL 70 mm, Z 1
WB 100 0 50

D mm	GL mm	NL mm	S mm	Z	ID LH	ID RH
5	70	30	10x27	1	**091186** ●	**091185** ●
6	70	30	10x27	1	**091188** ●	**091187** ●
8	70	30	10x27	1	**091192** ●	**091191** ●
10	70	30	10x27	1	**091194** ●	**091193** ●

RPM: n = 4000 - 9000 min^{-1}

Spare parts:

BEZ	ABM mm	BEM	ID
Allen screw	M5x10	Length adjustment	**005802** ●
Anti-twist allen screw	M5x10	Length adjustment	**007438** ●
Length adjustment screw Torx® 20	M5x17	for quick-change drill adaptors	**009157** ●

6.3 Hinge drilling

Application	To drill tear-free hinge holes.
Workpiece material	Softwood and hardwood. Chipboard and fibre materials (MDF, HDF etc.), uncoated, plastic coated, veneered etc. Laminated veneer lumber (plywood, multiplex plywood etc.).
Machine	Through feed drilling machines, Point-to-point drilling machines, CNC machining centres, Hinge boring machines, Special purpose drilling machines.
Design	Two available hinge drill designs:

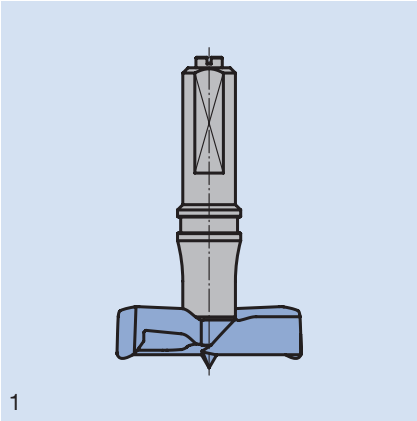

1

1. Design with centre point,
2 spurs and 2 spiral cutting edges (Z 2/V 2). These drills are optimised for machining standard panels in the furniture industry.
Design with short tip for deep holes in thin panels.

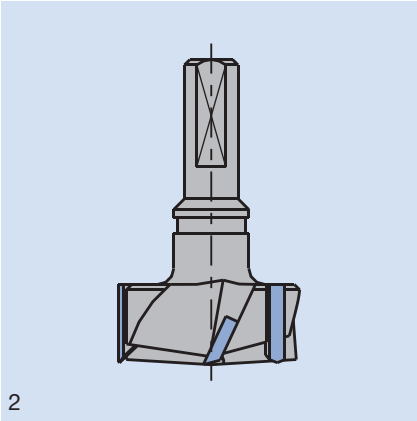

2

2. Design without centre point,
3 spurs and 3 spiral cutting edges ground to a V point (Z 3/V 3). Recommended when there is the risk of the centre point marking or breaking through the back of the panel, e.g. when drilling a 13 mm deep hole in a 16 mm thick workpiece.

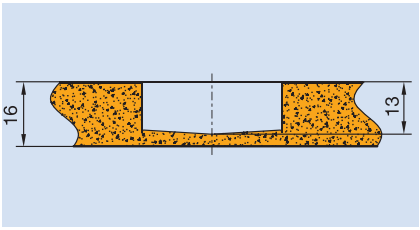

Shank	Hinge drills usually have a shank diameter of d = 10 mm.

Technical features

The dimensions listed in the tool tables refer to the following tool parameters:

D	Drill diameter
d	Shank diameter
l	Shank length
L	Total length of the hinge drill excluding the projection of the centre point
GL	Total length of the hinge drill including the projection of the centre point

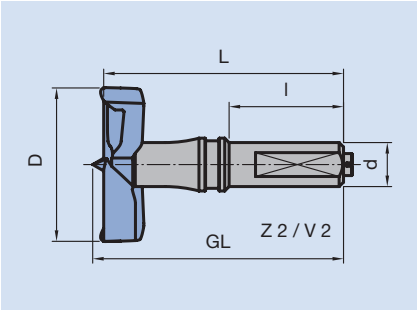

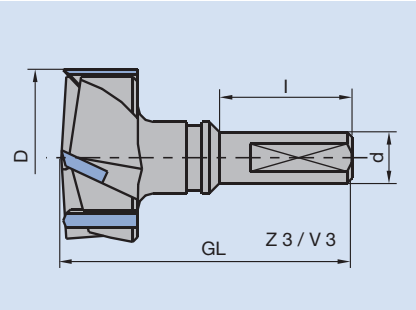

Application data

RPM feed speeds

The optimum RPM and feed speeds are detailed in the diagrams attached to the tool tables.









HW

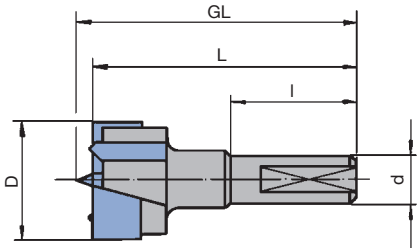

Z 2 / V 2 with centre point

Feed speed v_f depending on the spindle RPM n

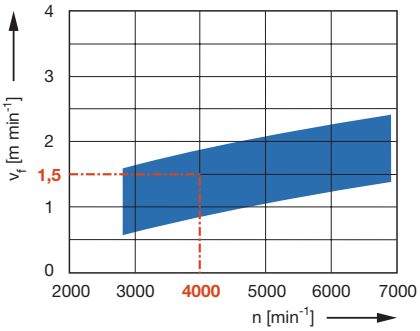

Workpiece material:
Chipboard plastic coated
Operation:
Drilling
Correction factor for v_f:
Veneered = 0.8
Paper coated = 0.8
MDF, solid wood = 0.7

Shank 10 mm

Application:
For drilling hinge holes, particularly in furniture construction.

Machine:
Point-to-point drilling machines, through feed drilling machines, CNC machining centres, hinge boring machines, multi spindle units.

Workpiece material:
Softwood and hardwood, chipboard and fibre materials (MDF, HDF etc.), uncoated, plastic coated, veneered etc., laminated veneer lumber (plywood, multiplex plywood etc.).

Technical information:
Good centering in solid wood by protruding centre point.

GL 57 mm, Z 2 / V 2
WB 310 0 04

D mm	GL mm	L mm	S mm	ID LH	ID RH
15	57	54,5	10x26	**034630** ●	**034631** ●
20	57	54,5	10x26		**034637** ●
25	57	54,5	10x26		**034643** ●
35	57	54,5	10x26		**034651** ●
40	57	54,5	10x26		**034677** ●

GL 72.5 mm, Z 2 / V 2
WB 310 0 04

D mm	GL mm	L mm	S mm	ID LH	ID RH
15	72,5	70	10x26	**034663** ●	**034664** ●
18	72,5	70	10x26		**034678** ●
20	72,5	70	10x26	**034665** ●	**034666** ●
25	72,5	70	10x26		**034668** ●
35	72,5	70	10x26	**034671** ●	**034672** ●

RPM: n = 2800 - 7000 min^{-1}

Spare parts:

BEZ	ABM mm	BEM	ID
Allen screw	M5x10	Length adjustment	**005802** ●
Anti-twist allen screw	M5x10	Length adjustment	**007438** ●
Length adjustment screw Torx® 20	M5x17	for quick-change drill adaptors	**009157** ●

● available ex stock
□ available at short notice
Instruction manual visit www.leitz.org








HW

Feed speed v_f depending on the spindle RPM n

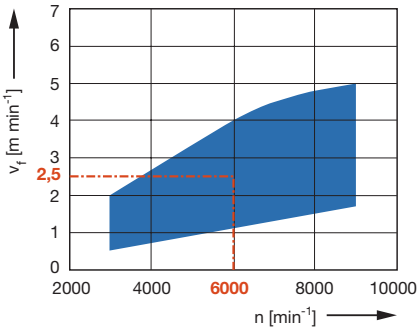

Workpiece material:
Chipboard plastic coated
Operation:
Drilling
Correction factor for v_f:
Chipboard paper coated = 0.7
Chipboard veneered = 0.7
MDF plastic coated = 1.0
Glulam = 0.6
Solid wood = 1.0

Shank 10 mm

Application:
For drilling hinge holes, particularly in furniture construction, with increased lifetime and high-quality edge.

Machine:
Point-to-point drilling machines, through feed drilling machines, CNC machining centres, hinge boring machines, multi spindle units.

Workpiece material:
Softwood and hardwood, chipboard and fibre materials (MDF, HDF etc.), uncoated, plastic coated, veneered etc., laminated veneer lumber (plywood, multiplex plywood etc.).

Technical information:
Round spur geometry for increased edge quality. Solid tungsten carbide design. High wear resistant tungsten carbide grade. Tear-free edges in panels with glued plastic edgebanders when used on main spindle or stable drilling units.

GL 59.5 mm, Z 2 / V 2
WB 310 0 13

D mm	GL mm	L mm	S mm	ID LH	ID RH
15	59,5	54,5	10x26	**034800** ●	**034801** ●
16	59,5	54,5	10x26	**034824** ●	**034825** ●
18	59,5	54,5	10x26	**034826** ●	**034827** ●
20	59,5	54,5	10x26	**034802** ●	**034803** ●
22	59,5	54,5	10x26	**034828** ●	**034829** ●
24	59,5	54,5	10x26		**034831** ●
25	59,5	54,5	10x26	**034804** ●	**034805** ●
26	59,5	54,5	10x26	**034806** ●	**034807** ●
28	59,5	54,5	10x26		**034833** ●
30	59,5	54,5	10x26	**034808** ●	**034809** ●
35	59,5	54,5	10x26	**034810** ●	**034811** ●

GL 72.5 mm, Z 2 / V 2
WB 310 0 13

D mm	GL mm	L mm	S mm	ID LH	ID RH
15	72,5	68	10x26	**034812** ●	**034813** ●
18	72,5	68	10x26	**034834** ●	**034835** ●
20	72,5	68	10x26	**034814** ●	**034815** ●
25	72,5	68	10x26	**034816** ●	**034817** ●
26	72,5	68	10x26	**034818** ●	**034819** ●
30	72,5	68	10x26	**034820** ●	**034821** ●
34	72,5	68	10x26		**037215** ●
35	72,5	68	10x26	**034822** ●	**034823** ●

RPM: n = 3000 - 9000 min^{-1}

Spare parts:

BEZ	ABM mm	BEM	ID
Allen screw	M5x10	Length adjustment	**005802** ●
Anti-twist allen screw	M5x10	Length adjustment	**007438** ●
Length adjustment screw Torx® 20	M5x17	for quick-change drill adaptors	**009157** ●

● available ex stock
□ available at short notice
Instruction manual visit www.leitz.org









HW

Feed speed v_f depending on the spindle RPM n

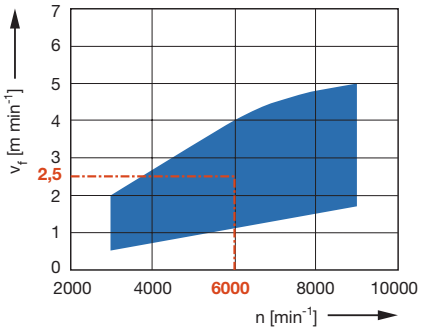

Workpiece material:
Chipboard plastic coated
Operation:
Drilling
Correction factor for v_f:
Chipboard paper coated = 0.7
Chipboard veneered = 0.7
MDF plastic coated = 1.0
Glulam = 0.6
Solid wood = 1.0

Shank 10 mm, short centre point

Application:
For drilling hinge holes, particularly in furniture construction, with increased lifetime and high-quality edge.

Machine:
Point-to-point drilling machines, through feed drilling machines, CNC machining centres, hinge boring machines, multi spindle units.

Workpiece material:
Softwood and hardwood, chipboard and fibre materials (MDF, HDF etc.), uncoated, plastic coated, veneered etc., laminated veneer lumber (plywood, multiplex plywood etc.).

Technical information:
Round spur geometry for increased edge quality. Solid tungsten carbide design. High wear resistant tungsten carbide grade. Tear-free edges in panels with glued plastic edgebanders when used on main spindles or stable drilling units. Design with reduced protrusion of centre point and spurs for deep holes in thin panels.

GL 58 mm, Z 2 / V2
WB 310 0 13

D mm	GL mm	L mm	S mm	ID LH	ID RH
15	58	54,5	10x26	**034841** ●	**034842** ●
20	58	54,5	10x26	**034843** ●	**034844** ●
25	58	54,5	10x26	**034845** ●	**034846** ●
26	58	54,5	10x26	**034847** ●	**034848** ●
35	58	54,5	10x26	**037201** ●	**037202** ●

GL 71 mm, Z 2 / V 2
WB 310 0 13

D mm	GL mm	L mm	S mm	ID LH	ID RH
15	71	68	10x26	**037203** ●	**037204** ●
20	71	68	10x26	**037205** ●	**037206** ●
25	71	68	10x26		**037208** ●
26	71	68	10x26	**037209** ●	**037210** ●
30	71	68	10x26	**037211** ●	**037212** ●
35	71	68	10x26	**037213** ●	**037214** ●

RPM: n = 3000 - 9000 min^{-1}

Spare parts:

BEZ	ABM mm	BEM	ID
Allen screw	M5x10	Length adjustment	**005802** ●
Anti-twist allen screw	M5x10	Length adjustment	**007438** ●
Length adjustment screw Torx® 20	M5x17	for quick-change drill adaptors	**009157** ●

● available ex stock
□ available at short notice
Instruction manual visit www.leitz.org

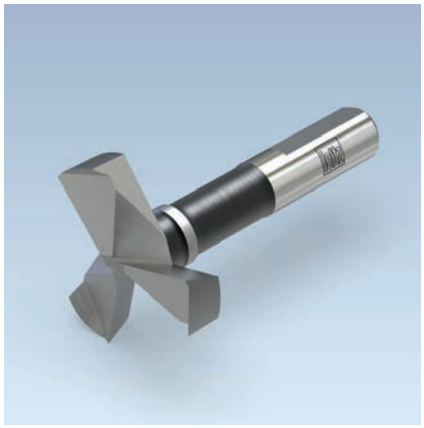






HW

Feed speed v_f depending on the spindle RPM n

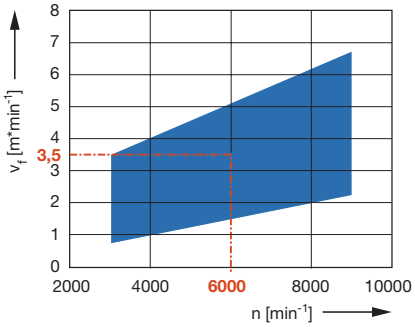

Workpiece material:
Chipboard plastic coated
Operation:
Drilling
Correction factor for v_f:
Chipboard paper coated = 0.7
Chipboard veneered = 0.7
MDF plastic coated = 1.0
Glulam = 0.6
Solid wood = 1.0

Shank 10 mm, short centre point

Application:
For drilling hinge holes, particularly in furniture construction, with increased lifetime and high-quality edge. Design for higher feed speed in comparison to boring bits with Z 2 / V 2.

Machine:
Point-to-point drilling machines, through feed drilling machines, CNC machining centres, hinge boring machines, multi spindle units.

Workpiece material:
Softwood and hardwood, chipboard and fibre materials (MDF, HDF etc.), uncoated, plastic coated, veneered etc., laminated veneer lumber (plywood, multiplex plywood etc.).

Technical information:
Round spur geometry for increased edge quality. Solid tungsten carbide design. High wear resistant tungsten carbide grade. Tear-free edges in panels with glued plastic edgebanders when used on main spindle, boring units as well as drilling machines.

GL 57 mm, Z 3 / V 3
WB 320 0 13

D mm	GL mm	L mm	S mm	ID LH	ID RH
18	57	54,5	10x26	**037250** □	**037251** □
20	57	54,5	10x26	**037252** ●	**037253** ●
22	57	54,5	10x26	**037254** □	**037255** □
24	57	54,5	10x26	**037256** □	**037257** □
25	57	54,5	10x26	**037258** ●	**037259** ●
26	57	54,5	10x26	**037260** ●	**037261** ●
28	57	54,5	10x26	**037262** □	**037263** □
30	57	54,5	10x26	**037264** ●	**037265** ●
35	57	54,5	10x26	**037266** ●	**037267** ●

GL 70 mm, Z 3 / V 3
WB 320 0 13

D mm	GL mm	L mm	S mm	ID LH	ID RH
18	70	68	10x26	**037268** □	**037269** □
20	70	68	10x26	**037270** ●	**037271** ●
25	70	68	10x26	**037272** ●	**037273** ●
26	70	68	10x26	**037274** ●	**037275** ●
30	70	68	10x26	**037276** ●	**037277** ●
34	70	68	10x26	**037278** □	**037279** □
35	70	68	10x26	**037280** ●	**037281** ●

RPM: n = 3000 - 9000 min^{-1}

Spare parts:

BEZ	ABM mm	BEM	ID
Allen screw	M5x10	Length adjustment	**005802** ●
Anti-twist allen screw	M5x10	Length adjustment	**007438** ●
Length adjustment screw Torx® 20	M5x17	for quick-change drill adaptors	**009157** ●

● available ex stock
□ available at short notice
Instruction manual visit www.leitz.org

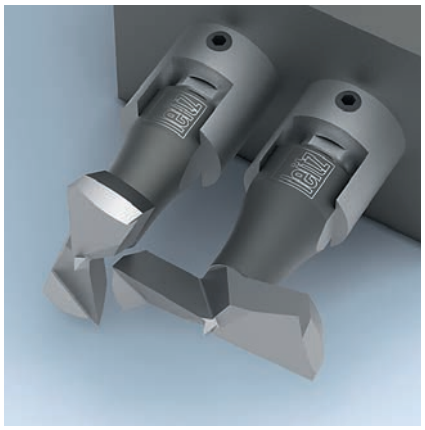







HW

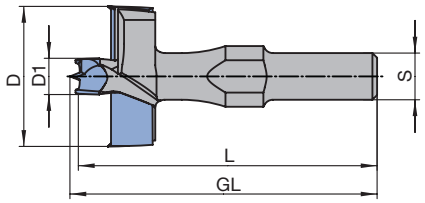

Double hinge drill with pre-drill

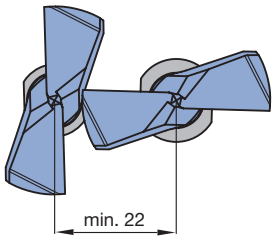

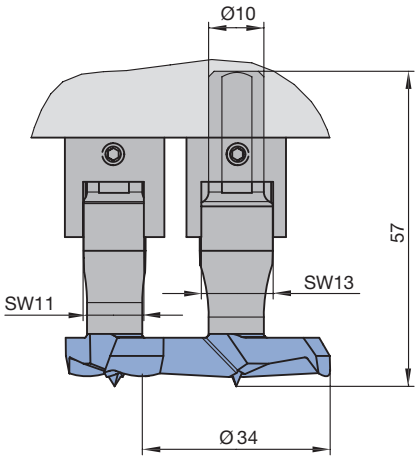

Double hinge drills in aggregate

Shank 10 mm, double furniture hinge

Application:
For drilling hinges and pivots in window manufacturing in single or twin drill design.

Machine:
Stationary routers with/without CNC control, machining centres, special cutting machines to machine frame parts, drilling machines, multi spindle units.

Workpiece material:
Softwood and hardwood, modified timber for window construction, laminated veneer lumber (plywood, multiplex plywood etc.), glued lumber.

Technical information:
Round spur geometry for high edge quality. Solid tungsten carbide design (ID **037218** / **037219** TC-tipped). High wear resistant tungsten carbide grade. Minimum distance of drill spindle 22 mm. ID **037218** / **037219** with pre-drill for corner pivots with pilot pin.

Boring bit set, consisting of 1 pc. RH and LH
AB 710 0

D mm	D1 mm	GL mm	L mm	S mm	QAL	DRI	ID
34		57	54,5	10x23	HW solid	LH, RH	**036784** □
30		57	54,5	10x23	HW solid	LH, RH	**036785** □
30	8	66	64	10x23	HW	LH, RH	**036786**

Universally applicable for drilling hinges and pivots on machines and aggregates of the following manufacturers: Weinig, SCM, Ganner, Götzinger, Striffler etc.

GL 57 mm, Z 2 / V 2, single tool
WB 203 0, WB 310 0 13

D mm	D1 mm	GL mm	L mm	S mm	QAL	ID LH	ID RH
34		57	54,5	10x23	HW solid	**034839** ●	**034838** ●
30		57	54,5	10x23	HW solid	**037216** ●	**037217** ●
30	8	66	64	10x23	HW	**037218**	**037219**

RPM: n = 3000 - 9000 min^{-1}

Spare parts:

BEZ	ABM mm	BEM	ID
Allen screw	M5x10	Length adjustment	**005802** ●
Anti-twist allen screw	M5x10	Length adjustment	**007438** ●

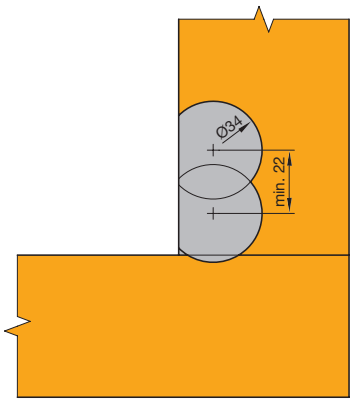

Application example:
Double hinges for corner pivots.

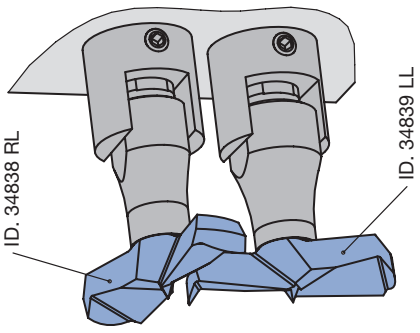

● available ex stock
□ available at short notice
Instruction manual visit www.leitz.org









HW

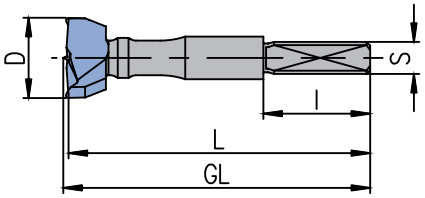

Z 2 / V 2 with centre point

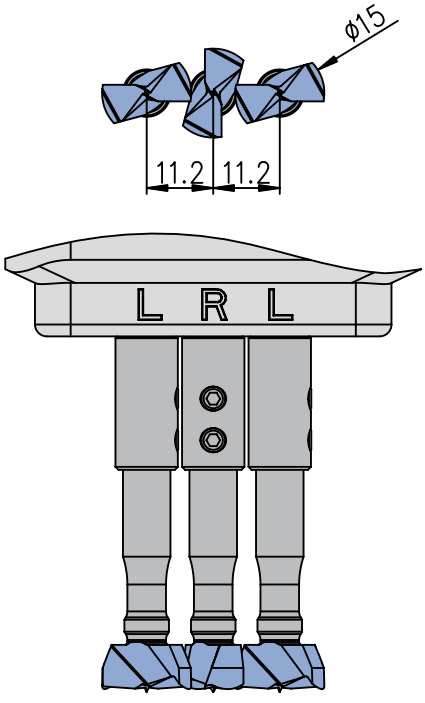

Drills in the unit

Shank 6 mm, Lamello® Cabineo®-System

Application:
For drilling the holes for the cabinet connectors of the Lamello® Cabineo®-System.

Machine:
Stationary routers with/without CNC control, machining centres, automatic boring machines, multi spindle units.

Workpiece material:
Softwood and hardwood, chipboard and fibre materials (MDF, HDF etc.), uncoated, plastic coated, veneered etc., laminated veneer lumber (plywood, multiplex plywood etc.).

Technical information:
Round spur geometry for high edge quality. Solid tungsten carbide design. High wear resistant tungsten carbide grade.

Boring bit set, consisting of 1 pc. RL and 2 pcs. LL
AB 710 0

D	GL	L	S	QAL	DRI	ID
mm	mm	mm	mm			
15	57,5	56,5	6x20	HW solid	LH, RH	**036788** □

Can be used in aggregates from Benz and Atemag.

GL 57 mm, Z 2 / V 2, single tool
WB 310 0 13

D	GL	L	S	QAL	ID	ID
mm	mm	mm	mm		LH	RH
15	57,5	56,5	6x20	HW solid	**037220** ●	**037221** ●

RPM: n = 3000 - 9000 min^{-1}

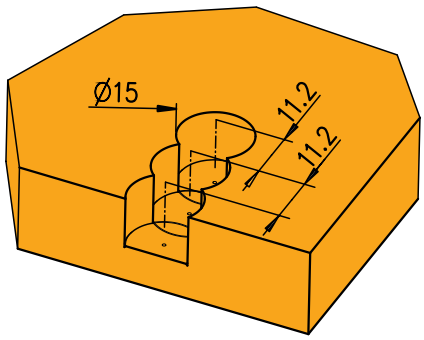

Application example: 3-way drilling in the body component

● available ex stock
□ available at short notice
Instruction manual visit www.leitz.org









HW

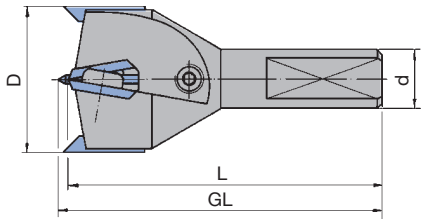

Feed speed v_f depending on the spindle RPM n

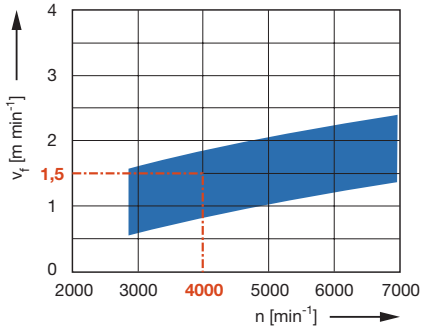

Workpiece material:
Chipboard plastic coated
Operation:
Drilling
Correction factor for v_f:
Veneered = 0.8
Paper coated = 0.8
MDF = 0.7

Shank 10 mm

Application:
For drilling hinge holes, particularly in furniture construction.

Machine:
Point-to-point drilling machines, through feed drilling machines, CNC machining centres, hinge boring machines, multi spindle units.

Workpiece material:
Softwood and hardwood, chipboard and fibre materials (MDF, HDF etc.), uncoated, plastic coated, veneered etc., laminated veneer lumber (plywood, multiplex plywood etc.).

Technical information:
Spurs and main cutting edge in turnblade design. Replaceable centre point, resharpenable and adjustable for deep holes near to the bottom surface layer without marks. Diameter constant tool.

GL 57 mm, Z 2 / V 2
WL 920 0

D	GL	L	S	ID
mm	mm	mm	mm	RH
35	57	54,5	10x26	**034565** ●

RPM: n = 2800 - 7000 min^{-1}

Spare knives:

BEZ	ABM mm	QAL	BEM	ID
Turnblade knife	15,7x12x1,5	HW	Ø35	**007673** ●
Turnblade spur	18x6x3.5	HW		**007669** ●
Centering pin	D3x40			**008151** ●

Spare parts:

BEZ	ABM mm	BEM	ID
Screw	M3.5x4 (head D7)		**006068** ●
Countersink screw	M3,5x6	Clamping screw for spur	**007062**
Allen screw	M6x4	Clamping screw for centre point	**005837** ●
Torx® key	Torx® 15		**005457** ●
Allen screw	M5x10	Length adjustment	**005802** ●
Anti-twist allen screw	M5x10	Length adjustment	**007438** ●
Length adjustment screw Torx® 20	M5x17	for quick-change drill adaptors	**009157** ●

● available ex stock
□ available at short notice
Instruction manual visit www.leitz.org









DP

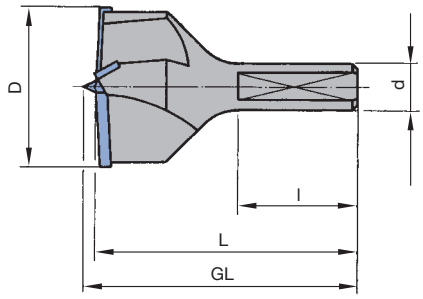

Feed speed v_f depending on the spindle RPM n

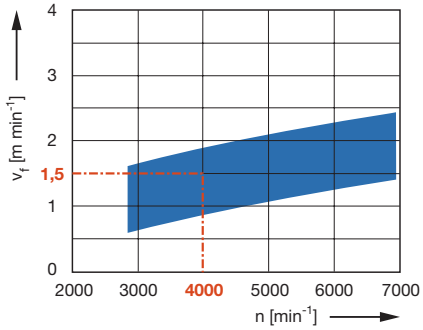

Workpiece material:
Chipboard plastic coated
Operation:
Drilling
Correction factor for v_f:
Veneered = 0.8
Paper coated = 0.8
MDF = 0.7

Shank 10 mm

Application:
For drilling hinge holes, particularly in furniture construction with maximum durability. Specially for drilling materials with hard and abrasive coatings (e.g. HPL, CPL etc.).

Machine:
Point-to-point drilling machines, through feed drilling machines, CNC machining centres, hinge boring machines, multi spindle units.

Workpiece material:
Chipboard and fibre materials (MDF, HDF etc.), uncoated, plastic coated, veneered etc., fire resistant particle and fibre materials, laminated veneer lumber (plywood, multiplex plywood etc.).

Technical information:
DP tipped for increased performance time compared to tungsten carbide. Suitability for high volume production. Diamaster PRO tipping, resharpenable two/three times with normal wear. Preferred used on automatic machines. Drills can only be used in column drilling machines when workpieces are clamped tightly.

GL 57 / GL 70 mm, Z 2 / V 2
WB 310 0 50

D mm	GL mm	L mm	S mm	ID LH	ID RH
15	70	68,5	10x26		**191023** ●
20	57	54,5	10x26		**191022** ●
25	70	68,5	10x26		**091197** ●
26	70	68,5	10X26		**191029** ●
35	57	54,5	10x26		**091181** ●
35	70	68,5	10x26	**091184** ●	**091183** ●

RPM: n = 2800 - 7000 min^{-1}

Spare parts:

BEZ	ABM mm	BEM	ID
Allen screw	M5x10	Length adjustment	**005802** ●
Anti-twist allen screw	M5x10	Length adjustment	**007438** ●
Length adjustment screw Torx® 20	M5x17	for quick-change drill adaptors	**009157** ●

Application

To drill holes for the furniture industry and in timber frame construction.

Workpiece material [recommended cutting material]

Softwood and hardwood.
Chipboard and fibre materials (MDF, HDF etc.), uncoated, plastic coated, veneered etc. [only HW].
Laminated veneer lumber (plywood, multiplex plywood etc.) [only HW].

Machine

Column drilling machines,
Drilling machines,
Special purpose drilling machines,
Portable drills.

Design

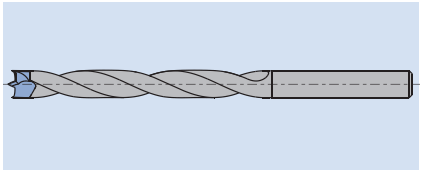

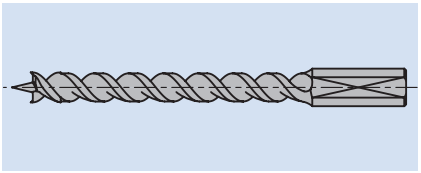

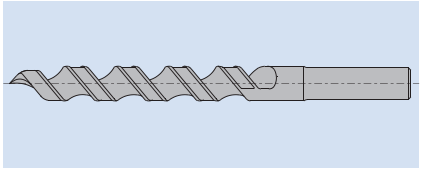

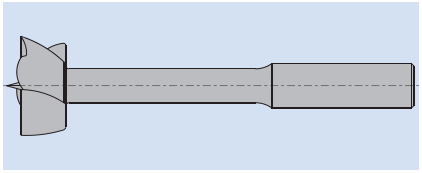

1. Twist drills
Twist drills with a centre point and spurs (Z 2/V 2) are used to drill holes deeper than possible with dowel drills.
There is a choice of cutting materials – SP, HS and HW. The matrix shows the recommended cutting material for the different workpiece materials:

	SP	HS	HW
Softwood, dry	♦	♦	♦
Softwood, wet	♦	♦	◇
Hardwood, dry	◇	♦	♦
Hardwood, wet	◇	♦	◇
Laminated wood (plywood, etc.)			♦
Chipboard and fibre materials			
- paper coated			♦
- plastic coated			♦
- veneered			♦
Solid wood, veneered			♦

♦ suitable ◇ partly suitable

Tungsten carbide spiral drills are available with single or double heel. The design with double heel improves guidance during boring and return stroke and reduces the friction between flute and hole.
Solid tungsten carbide Z 2/V 2 design suitable for drilling deep holes in solid wood without interim clearance strokes and for high feed speeds.

Twist drill WB 121 0 32 with special cutting edge geometry for drill holes in HPL without break-outs on both sides.

2. Levin type drill
Levin type drills are used to drill deep holes. The key feature is a spiral flute with a large chip gullet cross section giving excellent chip clearance. With V point in HS, recommended for through hole drilling and drilling holes in end grain.

3. Cylinder head drills
Cylinder head drills are used to drill tear-free holes in solid wood, for blind holes, for hinge holes and holes for repair plugs.

Technical features

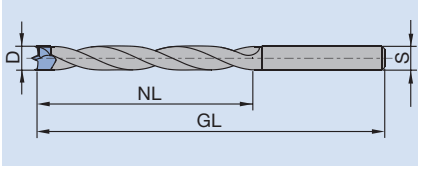

The dimensions listed in the tool tables refer to the following tool parameters:

D	Drill diameter
S	Shank diameter x shank length
NL	Working length = possible drilling depth
GL	Total length of the drill including the projection of the centre point

Application data

RPM/feed speeds
The optimum RPM and feed speeds are detailed in the diagrams attached to the tool tables.





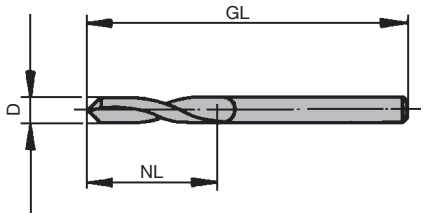

HW solid, Z 2

Application:
For multi-purpose drilling of blind and through holes.

Machine:
Point-to-point drilling machines, through feed drilling machines, CNC machining centres, hinge boring machines, multi spindle units, column drilling machines, portable drills.

Workpiece material:
Softwood and hardwood, chipboard and fibre materials (MDF, HDF etc.), uncoated, plastic coated, veneered etc., laminated veneer lumber (plywood, multiplex plywood etc.), plastics (thermoplastic, fibre reinforced etc.), NF-metals (aluminium, copper etc.).

Technical information:
Flat V-point. Shank diameter identical to drill diameter. Convert for shank D 10 mm with reducing sleeve TB 110 0 or PM 320 0 25 (see following pages). Drilling in NF-metal requires suitable lubrication (spray mist or minimal lubrication).

V-point 120°
WB 101 0 04

D mm	GL mm	NL mm	QAL	ID LH	ID RH
2	40	17,5	HW solid	**034410** ●	**034411** ●
2,5	40	18	HW solid	**034412** ●	**034413** ●
3	46	16	HW solid	**034414** ●	**034415** ●
3,2	49	18	HW solid	**034420** ●	**034421** ●
3,5	52	20	HW solid	**034416** ●	**034417** ●
4	55	22	HW solid	**034418** ●	**034419** ●
5	62	26	HW solid	**034424** ●	**034425** ●

RPM: n = 3000 - 9000 min^{-1}

Feed speed v_f depending on the spindle RPM n

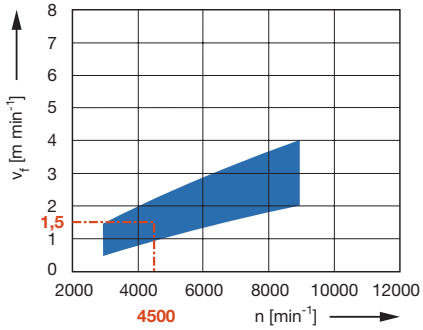

Workpiece material:
Chipboard plastic coated
Operation:
Drilling
Correction factor for v_f:
MDF, solid wood = 0.7
Chipboard, uncoated = 1.3

● available ex stock
□ available at short notice
Instruction manual visit www.leitz.org







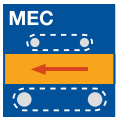





HW solid, Z 2

Application:
For break-out-free blind and through holes in HPL.

Machine:
Point-to-point drilling machines, through feed drilling machines, CNC machining centres, hinge boring machines, multi spindle units, column drilling machines.

Workpiece material:
Laminated materials (HPL-compact laminate, Trespa).

Technical information:
Special cutting edge geometry. Polished gullet area. Multiple times resharpenable.

GL 57.5 mm, Z 2, for HPL
WB 121 0 32

D	GL	NL	S	QAL	DRI	ID
mm	mm	mm	mm			
3	57,5	16	10x36	HW solid	RH	**230610** ●
3,6	57,5	16	10x36	HW solid	RH	**230611** ●
5	57,5	25	10x25	HW solid	RH	**230612** ●
5,1	57,5	25	10x25	HW solid	RH	**230613** ●
5,6	57,5	25	10x25	HW solid	RH	**230614** ●
6	57,5	25	10x25	HW solid	RH	**230615** ●
7	57,5	25	10x25	HW solid	RH	**230616** ●
8	57,5	25	10x25	HW solid	RH	**230617** ●
8,5	57,5	25	10x25	HW solid	RH	**230618** ●
9,3	57,5	25	10x25	HW solid	RH	**230619** ●
10	57,5	25	10x25	HW solid	RH	**230620** ●

Cutting value parameters, standard values:
Ø 3 mm: n = 3 500 min^{-1}; v_f = 0,8 m/min
Ø 5 mm: n = 3 500 min^{-1}; v_f = 1,0 m/min
from Ø 6 mm: n = 3 500 min^{-1}; v_f = 1,5 m/min
v_c = 0,7-1,6 m/s
f_z = 0,15-0,3 mm

● available ex stock
□ available at short notice
Instruction manual visit www.leitz.org

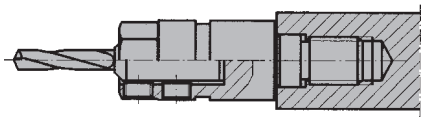

Drill bit clamping using the reducing sleeve TB 110 0 to use the full drill working length

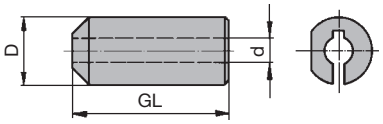

Reducing sleeve with short clamping length

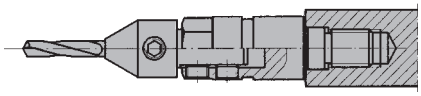

Drill bit clamping with increased stability using reducing sleeve PM 320 0 25

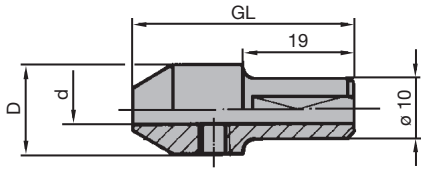

Reducing sleeve with increased clamping length

Application:
For clamping of twist drills WB 101 0 04. This enables the complete utilization of the drill working length.

Technical information:
Adaptor can be used in drilling spindles or adjustable drill chucks with side clamping screw. Not suitable for use in most quick-change drill adaptors such as PM 320 0 55/56/57/58/59.

Reducing sleeves with short clamping length
TB 110 0

D mm	d mm	GL mm	ID
10	2	23	**034520** ●
10	2,5	23	**034521** ●
10	3	23	**034522** ●
10	3,18 - 3,2	23	**034525** ●
10	3,5	23	**034523** ●
10	4	23	**034524** ●
10	5	23	**034526** ●

Application:
For clamping of twist drills WB 101 0 04 with reduced risk of breaking of the clamped drill by reducing the length of the unsupported drill.

Technical information:
Adaptor with shank 10 mm and clamping area. Usable in drilling spindles or drill chucks with side clamping screw. By mounting the length adjustment screw ID **009157** in the shank of the reducing sleeve, easy clamping in the quick-change drill chuck PM 320 0 55/56/57/58/59 is possible.

Reducing sleeves with increased clamping length
PM 320 0 25

D mm	d mm	GL mm	S mm	ID
15	2	38	10x19	**034490** ●
15	2,5	38	10x19	**034491** ●
15	3	38	10x19	**034492** ●
15	3,18 - 3,2	38	10x19	**034495** ●
15	3,5	38	10x19	**034493** ●
15	4	38	10x19	**034494** ●
15	5	38	10x19	**034496** ●

Spare parts:

BEZ	ABM mm	BEM	ID
Allen key	SW 3		**005433** ●
Allen screw	M6x5		**005836** ●
Length adjustment screw Torx® 20	M5x17	for quick-change drill adaptor	**009157** ●



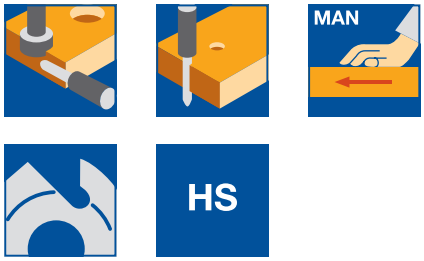

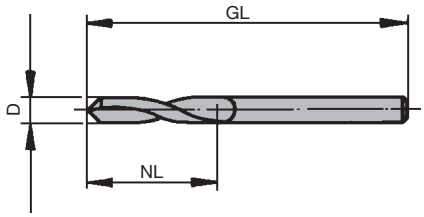

HS solid, Z 2

Application:
For universal boring of blind and through holes.

Machine:
CNC machining centres, machining centres, hinge boring machines, column drilling machines.

Workpiece material:
Plastic profiles with and without steel reinforcement, aluminium profiles, non-ferrous metals.

Technical information:
HS-solid spiral drill.

Short design, Z 2
WB 101 0

D mm	GL mm	NL mm	QAL	DRI	ID
3	61	33	HS	RH	**780041** ●
5	86	52	HS	RH	**780044** ●
6	93	57	HS	RH	**743200** ●
8	117	75	HS	RH	**743201** ●

Long design, Z 2
WB 101 0

D mm	GL mm	NL mm	QAL	DRI	ID
5	132	87	HS	RH	**743400** ●
6,2	148	97	HS	RH	**743401** ●
8,2	165	109	HS	RH	**743402** ●
10,2	184	121	HS	RH	**743403** ●

RPM: n = 1200 - 3500 min^{-1}

● available ex stock
□ available at short notice
Instruction manual visit www.leitz.org









HS

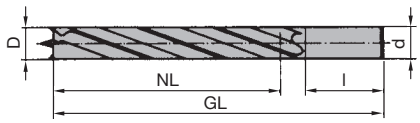

WB 120 0 02/05, with single heel

Feed speed v_f depending on the spindle RPM n

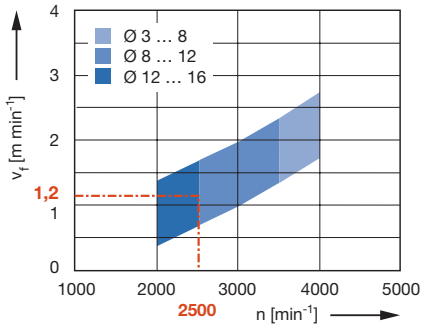

Workpiece material:
Softwood
Operation:
Drilling
Correction factor for v_f:
Hardwood = 0.7

HS solid, Z 2 / V 2

Application:
For multi-purpose drilling of tear-free blind holes.

Machine:
Column drilling machines, drilling machines, multi spindle units, special purpose drilling machines, portable drills.

Workpiece material:
Softwood and hardwood, laminated veneer lumber (plywood, multiplex plywood etc.), plastics (thermoplastic).

Technical information:
Design in HS solid with long centre point and round spurs. Shank diameter identical to drill diameter. Design with single heel to reduce friction in the hole.

Shank diameter identical to drill diameter
WB 120 0 05

D mm	GL mm	NL mm	S mm	QAL	DRI	ID
3	70	35	3x30	HS	RH	**035852** ●
4	80	45	4x30	HS	RH	**035853** ●
4,5	85	50	4,5x30	HS	RH	**035892** ●
5	90	50	5x30	HS	RH	**035854** ●
5,5	95	55	5,5x35	HS	RH	**035893** ●
6	100	60	6x35	HS	RH	**035855** ●
6,5	105	65	6,5x35	HS	RH	**035894** ●
7	110	65	7x40	HS	RH	**035856** ●
7,5	115	70	7,5x40	HS	RH	**035895** ●
8	120	75	8x40	HS	RH	**035857** ●
10	140	85	10x50	HS	RH	**035859** ●
12	155	95	12x50	HS	RH	**035861** ●

RPM: n = 1500 - 4000 min^{-1}









HW

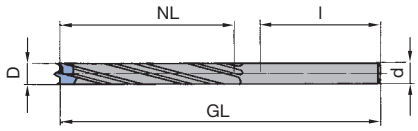

WB 120 0 25/27, with double heel

Feed speed v_f depending on the spindle RPM n

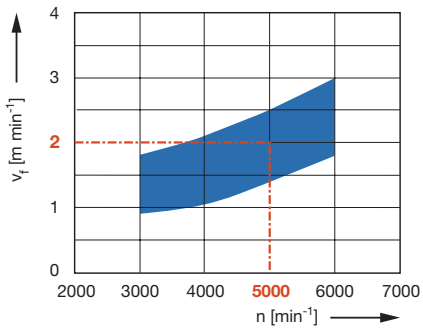

Workpiece material:
Chipboard plastic coated
Operation:
Drilling
Correction factor for v_f:
Solid wood = 0.7
Laminated veneer lumber = 0.8

When drilling holes with a depth greater than 4 x D interim clearance stroke is recommended!

HW, Z 2 / V 2, with heel

Application:
For multi-purpose drilling of tear-free blind holes.

Machine:
Column drilling machines, drilling machines, multi spindle units, special purpose drilling machines, portable drills.

Workpiece material:
Softwood and hardwood, chipboard and fibre materials (MDF, HDF etc.), uncoated, plastic coated, veneered etc., laminated veneer lumber (plywood, multiplex plywood etc.).

Technical information:
Tungsten carbide tipped design. Shank diameter identical to the drill diameter. Design with double heel for improved guidance during drilling and return stroke from the hole.

Short design
WB 120 0 27

D mm	GL mm	NL mm	S mm	QAL	DRI	ID
5	70	35	5x35	HW	RH	**035885** ●
6	70	35	6x35	HW	RH	**035886** ●
8	70	35	8x35	HW	RH	**035888** ●
10	70	35	10x35	HW	RH	**035889** ●

Long design
WB 120 0 25

D mm	GL mm	NL mm	S mm	QAL	DRI	ID
4	80	55	4x25	HW	RH	**035882** ●
5	90	60	5x30	HW	RH	**035872** ●
6	100	65	6x35	HW	RH	**035874** ●
7	110	70	7x40	HW	RH	**035876** ●
8	120	75	8x45	HW	RH	**035877** ●
9	130	80	9x50	HW	RH	**035878** ●
10	140	90	10x50	HW	RH	**035879** ●
12	155	100	12x55	HW	RH	**035881** ●

RPM: n = 3000 - 6000 min^{-1}

● available ex stock
□ available at short notice
Instruction manual visit www.leitz.org








HW

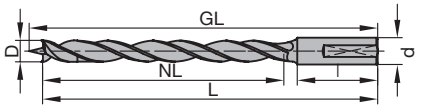

WB 120 0 35, solid tungsten carbide drill

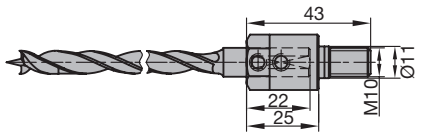

WB 120 0 35, solid tungsten carbide drill with adaptor

Feed speed v_f depending on the spindle RPM n

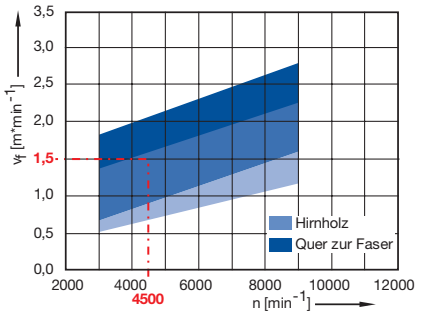

Workpiece material:
Softwood
Operation:
Drilling
Correction factor for v_f:
Hardwood = 0.8
Laminated veneer lumber = 1.1

HW solid, Z 2 / V2, with heel

Application:
For drilling deep holes. Particularly suitable for drilling connection and dowel holes in timber frame and window construction.

Machine:
Stationary routers with/without CNC control, machining centres, special cutting machines to machine frame parts, column drilling machines, drilling machines, multi spindle units, portable drills.

Workpiece material:
Softwood and hardwood, modified timber for window construction, laminated veneer lumber (plywood, multiplex etc.), glued lumber.

Technical information:
Design in solid tungsten carbide, Z 2/V 2 and centre point. Extra-long centre point for use of the drills at an angle. Design with double heel for improved guidance while drilling and return stroke from the hole. Shank design with reduced clamping area for good centering in shrink and collet chucks.

GL 105 mm
WB 120 0 35

D mm	GL mm	L mm	NL mm	S mm	QAL	DRI	ID with adaptor	ID without adaptor
6	105	100,5	70	10x25	HW solid	RH	**230158** □	**230058** ●
6	105	100,5	70	10x25	HW solid	LH	**230159** □	**230059** ●
8	105	100	70	10x25	HW solid	RH	**230160** □	**230060** ●
8	105	100	70	10x25	HW solid	LH	**230161** □	**230061** ●
10	105	99,5	70	10x25	HW solid	RH	**230162** □	**230062** ●
10	105	99,5	70	10x25	HW solid	LH	**230163** □	**230063** ●
12	105	99	70	10x25	HW solid	RH	**230164** □	**230064** ●
12	105	99	70	10x25	HW solid	LH	**230165** □	**230065** ●

GL 130 mm
WB 120 0 35

D mm	GL mm	L mm	NL mm	S mm	QAL	DRI	ID with adaptor	ID without adaptor
6	130	125,5	90	10x30	HW solid	RH	**230150** □	**230050** ●
6	130	125,5	90	10x30	HW solid	LH	**230151** □	**230051** ●
6,5	130	125,5	90	10x30	HW solid	RH	**230170** □	**230070** ●
8	130	125	90	10x30	HW solid	RH	**230152** □	**230052** ●
8	130	125	90	10x30	HW solid	LH	**230153** □	**230053** ●
10	130	124,5	90	10x30	HW solid	RH	**230154** □	**230054** ●
10	130	124,5	90	10x30	HW solid	LH	**230155** □	**230055** ●
12	130	124	90	10x30	HW solid	RH	**230156** □	**230056** ●
12	130	124	90	10x30	HW solid	LH	**230157** □	**230057** ●

GL 150 mm
WB 120 0 35

D mm	GL mm	L mm	NL mm	S mm	QAL	DRI	ID without adaptor
14	150	143,5	100	10x30	HW solid	RH	**230066** ●
16	150	143	100	10x30	HW solid	RH	**230068** ●

RPM: n = 3000 - 9000 min^{-1}

● available ex stock
□ available at short notice
Instruction manual visit www.leitz.org









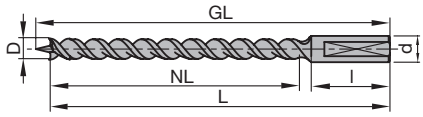

WB 120 0 34, solid tungsten carbide drill

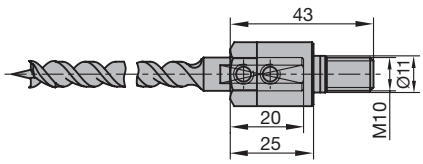

WB 120 0 34, solid tungsten carbide drill with adaptor

Feed speed v_f depending on the spindle RPM n

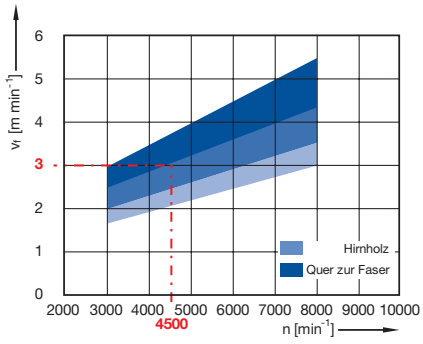

Diameter: D ≤ 6 mm
Workpiece material: Softwood
Operation: Drilling
Correction factor for v_f:
Hardwood = 0.8
Laminated veneer lumber = 1.2

HW solid, Z 2 / V 2, Marathon

Application:
For drilling very deep holes without interim clearance strokes. Particularly suitable for drilling connection and dowel holes in timber frame and window construction.

Machine:
Stationary routers with/without CNC control, machining centres, special cutting machines to machine frame parts, column drilling machines, drilling machines, multi spindle units, portable drills.

Workpiece material:
Softwood and hardwood, modified timber for window construction, laminated veneer lumber (plywood, multiplex etc.), glued lumber.

Technical information:
Design in solid tungsten carbide, Z 2/V 2 and centre point. Marathon coating for increased performance time. Extra-long centre point for use of the drills at an angle. Very large gullets for perfect chip removal particularly when drilling in end grain. Shank design with reduced clamping area for good centering in shrink and collet chucks.

GL 105 mm
SB 199 0, WB 120 0 34

D mm	GL mm	L mm	NL mm	S mm	DRI	ID with adaptor	ID without adaptor
3	105	102	70	10x25	RH	**230121** □	**230021** ●
3,5	105	102	70	10x25	RH	**230122** □	**230022** ●
4,5	105	101	70	10x25	RH	**230123** □	**230023** ●
6	105	100,5	70	10x25	RH	**230108** □	**230008** ●
6	105	100,5	70	10x25	LH	**230109** □	**230009** ●
8	105	99,5	70	10x25	RH	**230110** □	**230010** ●
8	105	99,5	70	10x25	LH	**230111** □	**230011** ●
8,2	105	99,5	70	10x25	RH	**231600** □	**231500** ●
8,2	105	99,5	70	10x25	LH	**231601** □	**231501** ●
10	105	98,5	70	10x25	RH	**230112** □	**230012** ●
10	105	98,5	70	10x25	LH	**230113** □	**230013** ●
12	105	97,5	70	10x25	RH	**230114** □	**230014** ●
12	105	97,5	70	10x25	LH	**230115** □	**230015** ●

GL 130 mm
WB 120 0 34

D mm	GL mm	L mm	NL mm	S mm	DRI	ID with adaptor	ID without adaptor
6	130	125,5	90	10x30	RH	**230100** □	**230000** ●
6	130	125,5	90	10x30	LH	**230101** □	**230001** ●
6,5	130	125,5	90	10x30	RH	**230120** □	**230020** ●
8	130	124,5	90	10x30	RH	**230102** □	**230002** ●
8	130	124,5	90	10x30	LH	**230103** □	**230003** ●
10	130	123,5	90	10x30	RH	**230104** □	**230004** ●
10	130	123,5	90	10x30	LH	**230105** □	**230005** ●
12	130	122,5	90	10x30	RH	**230106** □	**230006** ●
12	130	122,5	90	10x30	LH	**230107** □	**230007** ●

GL 150 mm
WB 120 0 34

D mm	GL mm	L mm	NL mm	S mm	DRI	ID with adaptor	ID without adaptor
14	150	140,5	100	10x30	RH	**230116** □	**230016** ●
16	150	140	100	10x30	RH	**230118** □	**230018** ●

RPM: n = 3000 - 9000 min^{-1}

● available ex stock
□ available at short notice
Instruction manual visit www.leitz.org

Feed speed v_f depending on the spindle RPM n

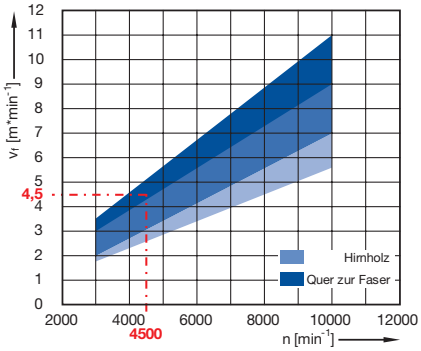

Diameter:
D = 6 - 12 mm
Workpiece material:
Softwood
Operation:
Drilling
Correction factor for v_f:
Hardwood = 0.8
Laminated veneer lumber = 1.2

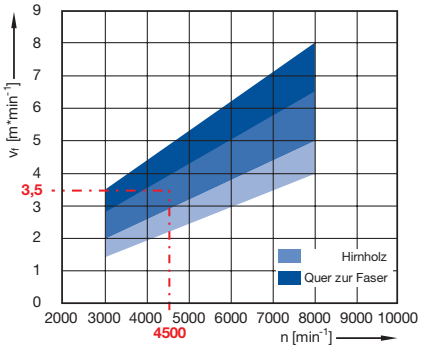

Diameter:
D > 12 mm
Workpiece material:
Softwood
Operation:
Drilling
Correction factor for v_f:
Hardwood = 0.8
Laminated veneer lumber = 1.2



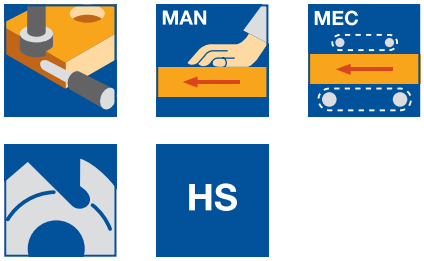

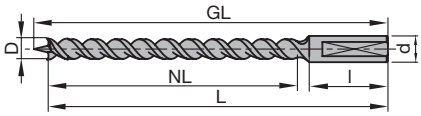



Optionally with triangular shank, for mounting in drill chucks

HS-twist drill XL, Z 2 / V 2

Application:
For drilling very deep through holes without interim clearance strokes.

Machine:
Joinery machines, column drilling machines, drilling machines, multi spindle units, special purpose drilling machines, portable drills.

Workpiece material:
Softwood and hardwood.

Technical information:
Design in HS solid, Z 2 / V 2 with long centre point. Polished gullets for perfect chip removal. Extra-long centre point for use of the drills at an angle.

GL 235 mm
WB 120 0 34

D mm	GL mm	NL mm	S mm	QAL	DRI	ID	ID Triangular shank
12	235	165	12x50	HS	RH	**230702** ●	**230802** ●
14	235	165	14x50	HS	RH	**230703** ●	**230803** ●
16	235	165	16x50	HS	RH	**230704** ●	**230804** ●
18	235	165	16x50	HS	RH	**230705** ●	**230805** ●
20	235	165	16x50	HS	RH	**230706** ●	**230806** ●
22	235	165	16x50	HS	RH	**230707** ●	**230807** ●
24	235	165	16x50	HS	RH	**230708** ●	**230808** ●
26	235	165	16x50	HS	RH	**230709** ●	**230809** ●
32	235	165	16x50	HS	RH	**230710** ●	**230810** ●

GL 360 mm
WB 120 0 34

D mm	GL mm	NL mm	S mm	QAL	DRI	ID	ID Triangular shank
12	360	290	12x50	HS	RH	**230713** ●	**230813** ●
14	360	290	14x50	HS	RH	**230714** ●	**230814** ●
16	360	290	16x50	HS	RH	**230715** ●	**230815** ●
18	360	290	16x50	HS	RH	**230716** ●	**230816** ●
20	360	290	16x50	HS	RH	**230717** ●	**230817** ●
22	360	290	16x50	HS	RH	**230718** ●	**230818** ●
24	360	290	16x50	HS	RH	**230719** ●	**230819** ●
26	360	290	16x50	HS	RH	**230720** ●	**230820** ●
32	360	290	16x50	HS	RH	**230721** ●	**230821** ●

GL 460 mm
WB 120 0 34

D mm	GL mm	NL mm	S mm	QAL	DRI	ID	ID Triangular shank
12	460	390	12x50	HS	RH	**230724** ●	**230824** ●
14	460	390	14x50	HS	RH	**230725** ●	**230825** ●
16	460	390	16x50	HS	RH	**230726** ●	**230826** ●
18	460	390	16x50	HS	RH	**230727** ●	**230827** ●
20	460	390	16x50	HS	RH	**230728** ●	**230828** ●
22	460	390	16x50	HS	RH	**230729** ●	**230829** ●
24	460	390	16x50	HS	RH	**230730** ●	**230830** ●
26	460	390	16x50	HS	RH	**230731** ●	**230831** ●
32	460	390	16x50	HS	RH	**230732** ●	**230832** ●

● available ex stock
□ available at short notice
Instruction manual visit www.leitz.org









HW

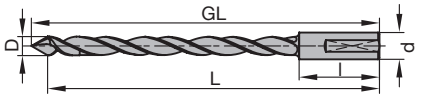

WB 101 0 13, twist drill with V-point

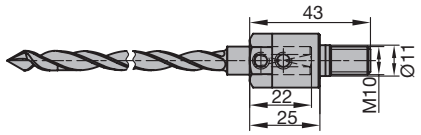

WB 101 0 13, twist drill with V-point, with adaptor

Feed speed v_f depending on the spindle RPM n

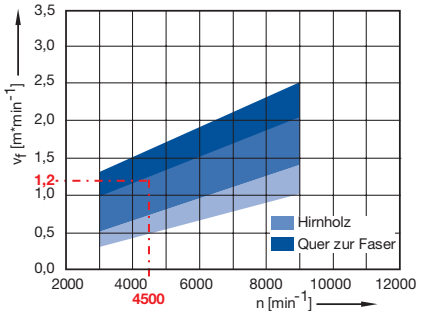

Workpiece material:
Softwood
Operation:
Drilling
Correction factor for v_f:
Hardwood = 0.8
Laminated veneer lumber = 1.1

HW solid, Z 2, V-point

Application:
For drilling deep holes. Particularly for timber frame and window construction.

Machine:
Stationary routers with/without CNC control, machining centres, special cutting machines to machine frame parts, column drilling machines, drilling machines, multi spindle units, portable drills.

Workpiece material:
Softwood and hardwood, modified timber for window construction, laminated veneer lumber (plywood, multiplex etc.), glued lumber.

Technical information:
Solid tungsten carbide design, Z 2 with V-point. Design with double heel for improved guidance while drilling and return stroke from the hole. Shank design with reduced clamping area for good centering in shrink and collet chucks.

GL 130 / 160 mm
WB 101 0 13

D mm	GL mm	NL mm	S mm	QAL	DRI	ID with adaptor	ID without adaptor
7	130	90	10x30	HW solid	RH	**230451** □	**230351** ●
8	160	120	10x30	HW solid	RH	**230455** □	**230355** ●
9	160	120	10x30	HW solid	RH	**230452** □	**230352** ●
10	160	120	10x30	HW solid	RH	**230453** □	**230353** ●
12	160	120	10x30	HW solid	RH	**230454** □	**230354** ●

RPM: n = 3000 - 9000 min^{-1}

● available ex stock
□ available at short notice
Instruction manual visit www.leitz.org











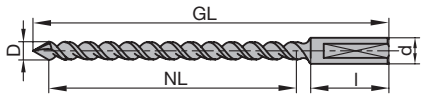

WB 101 0 12,
twist drill with V-point

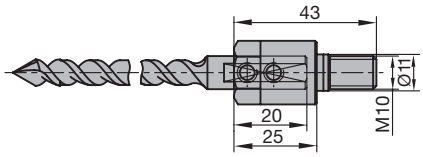

WB 101 0 12,
twist drill with V-point, with adaptor

Feed speed v_f depending on the spindle RPM n

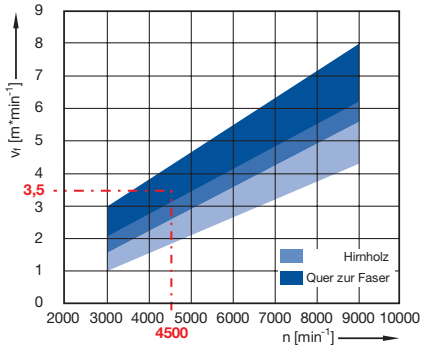

HW solid, Z 2, V-point, Marathon

Application:
For drilling very deep holes without interim clearance strokes at high feed speed particularly for timber frame and window construction.

Machine:
Stationary routers with/without CNC control, machining centres, special cutting machines to machine frame parts, column drilling machines, drilling machines, multi spindle units, portable drills.

Workpiece material:
Softwood and hardwood, modified timber for window construction, laminated veneer lumber (plywood, multiplex etc.), glued lumber.

Technical information:
Solid tungsten carbide design, Z 2 with V-point. Marathon coating for increased performance time. Very large gullets for perfect chip removal. Shank design with reduced clamping area for good centering in shrink and collet chucks.

GL 130 / 160 mm
WB 101 0 12

D mm	GL mm	NL mm	S mm	DRI	ID with adaptor	ID without adaptor
6	130	90	10x30	RH	**230400** □	**230300** ●
7	130	90	10x30	RH	**230401** □	**230301** ●
8	160	120	10x30	RH	**230405** □	**230305** ●
9	160	120	10x30	RH	**230402** □	**230302** ●
10	160	120	10x30	RH	**230403** □	**230303** ●
12	160	120	10x30	RH	**230404** □	**230304** ●

RPM: n = 3000 - 9000 min^{-1}

Diameter:
D = 6 - 12 mm
Workpiece material:
Softwood
Operation:
Drilling, through hole
Correction factor for v_f:
Hardwood = 0.8
Laminated veneer lumber = 1.2

● available ex stock
□ available at short notice
Instruction manual visit www.leitz.org



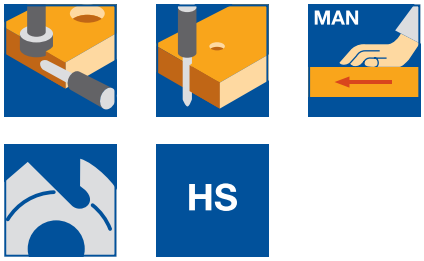

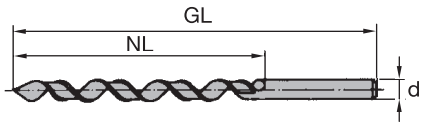

WB 100 0, with V-point

Feed speed v_f depending on the spindle RPM n

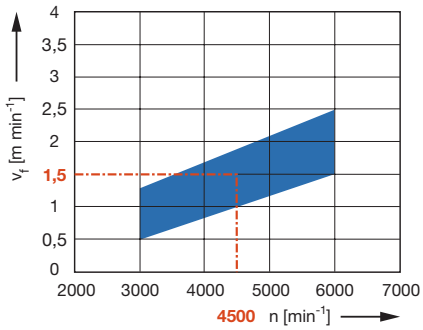

Workpiece material:
Solid wood
Operation:
Drilling
Correction factor for v_f:
Drilling depth > 4 x D = 0.8

HS solid, Z 1

Application:
For drilling deep holes. Suitable for depths up to approx. 4 x D without interim clearance strokes.

Machine:
Column drilling machines, drilling machines, multi spindle units, special purpose drilling machines, portable drills.

Workpiece material:
Softwood and hardwood.

Technical information:
Solid HS design, Z 1. V-point for producing tear-free holes on both sides when drilling through holes. Very large gullets for perfect chip removal particularly when drilling in end grain.

V-point for through hole drilling
WB 100 0

D	GL	NL	S	QAL	Z	DRI	ID
mm	mm	mm	mm				
5	90	50	5x35	HS	1	RH	**036110** ●
6	100	60	6x35	HS	1	RH	**036111** ●
8	120	80	8x40	HS	1	RH	**036112** ●
10	120	80	10x40	HS	1	RH	**036113** ●
12	140	100	12x40	HS	1	RH	**036114** ●

RPM: n = 3000 - 6000 min^{-1}









HW

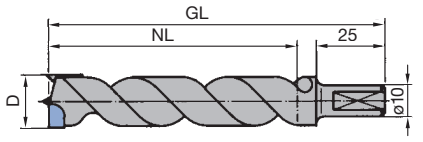

WB 110 0, shank with clamping flat and adjusting screw

Feed speed v_f depending on the spindle RPM n

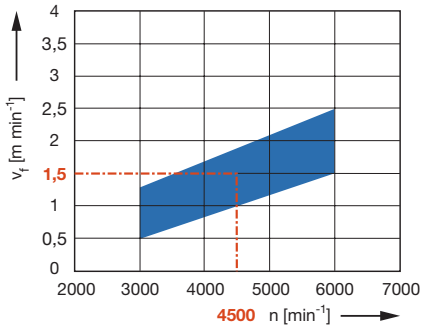

Workpiece material:
Solid wood
Operation:
Drilling
Correction factor for v_f:
Drilling depth > 4 x D = 0.8

HW, Z 1 / V 1

Application:
For drilling deep holes. Suitable for depths up to 75 mm without interim clearance strokes. Particularly suitable for producing joint holes in timber frame construction.

Machine:
Column drilling machines, drilling machines, multi spindle units, special purpose drilling machines, portable drills.

Workpiece material:
Softwood and hardwood, laminated veneer lumber (plywood, multiplex plywood etc.), glued lumber.

Technical information:
Tungsten carbide design, Z 1/V 1 and centre point. Very large gullets for good chip removal, particularly when drilling in end grain.

Drill point for blind holes
WB 110 0

D mm	GL mm	NL mm	S mm	QAL	ID LH	ID RH
12	110	80	10x25	HW	**036174** ●	**036175** ●
14	110	80	10x25	HW		**036177** ●
16	110	80	10x25	HW	**036178** ●	**036179** ●

RPM: n = 3000 - 7500 min^{-1}

Spare parts:

BEZ	ABM mm	BEM	ID
Allen screw	M5x10	Length adjustment	**005802** ●
Anti-twist allen screw	M5x10	Length adjustment	**007438** ●

● available ex stock
□ available at short notice
Instruction manual visit www.leitz.org

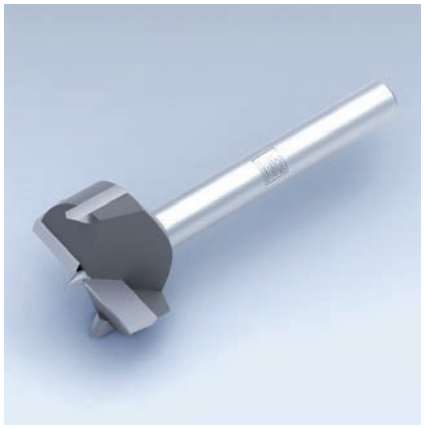






HW

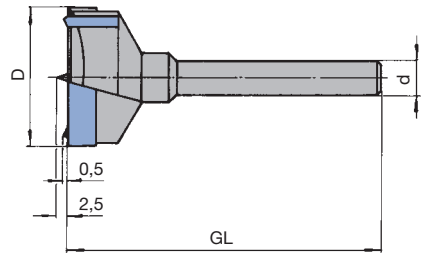

WB 310 0 03, shank 10 mm,
GL = 90 mm

Feed speed v_f depending on the spindle RPM n

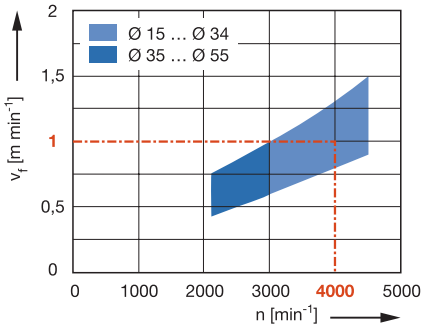

Workpiece material:
Hardwood
Operation:
Drilling
Correction factor for v_f:
Chipboard = 1.2
Laminated veneer lumber = 1.1

HW, Z 2 / V 2

Application:
For drilling hinge holes, particularly in furniture construction.

Machine:
Column drilling machines, drilling machines, special purpose drilling machines, portable drills.

Workpiece material:
Softwood and hardwood.

Technical information:
Tungsten carbide design, Z 2/V 2. Shank 10 mm suitable for stationary drilling machines and portable drills.

Shank 10 mm
WB 310 0 03

D mm	GL mm	S mm	DRI	ID
15	90	10x55	RH	**036668** ●
16	90	10x55	RH	**036669** ●
17	90	10x55	RH	**036670** ●
18	90	10x55	RH	**036671** ●
19	90	10x55	RH	**036672** ●
20	90	10x55	RH	**036673** ●
22	90	10x55	RH	**036674** ●
24	90	10x70	RH	**036676** ●
25	90	10x70	RH	**036677** ●
26	90	10x70	RH	**036678** ●
28	90	10x70	RH	**036679** ●
30	90	10x70	RH	**036680** ●
34	90	10x65	RH	**036682** ●
35	90	10x65	RH	**036683** ●
40	90	10x65	RH	**036686** ●

RPM: n = 1200 - 4500 min^{-1}









HW

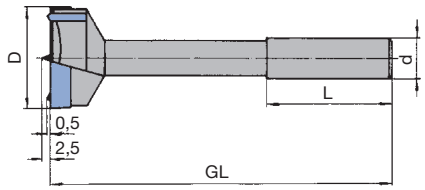

Tungsten carbide tipping with large resharpening area

Feed speed v_f depending on the spindle RPM n

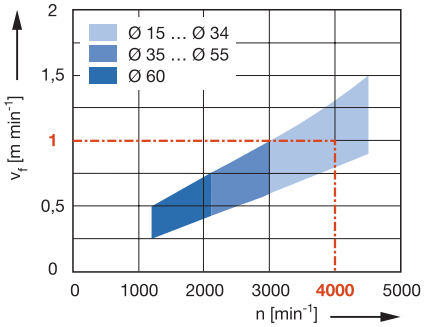

Workpiece material:
Hardwood
Operation:
Drilling
Correction factor for v_f:
Chipboard = 1.2
Laminated veneer lumber = 1.1

HW, Z 2 / V 2

Application:
For drilling hinge holes, particularly in furniture construction.

Machine:
Column drilling machines, drilling machines, special purpose drilling machines, portable drills.

Workpiece material:
Softwood and hardwood.

Technical information:
Tungsten carbide design, Z 2/V 2. Reinforced shank for heavy machining in column drilling machines and powerful portable drills.

Shank 13 / 16 mm, reinforced design
WB 310 0 02

D	GL	S	DRI	ID
mm	mm	mm		
20	140	13x50	RH	**036462** ●
22	140	13x50	RH	**036463** ●
25	140	13x50	RH	**036465** ●
30	140	13x50	RH	**036468** ●
35	140	16x50	RH	**036471** ●
40	140	16x50	RH	**036474** ●
50	150	16x50	RH	**036480** ●
55	150	16x50	RH	**036483** ●
60	150	16x50	RH	**036486** ●

RPM: n = 1200 - 4500 min^{-1}

● available ex stock
□ available at short notice
Instruction manual visit www.leitz.org

Application	Countersink of holes.
Workpiece material [recommended cutting material]	Softwood and hardwood. Chipboard and fibre materials (MDF, HDF etc.), uncoated, plastic coated, veneered etc. [only HW]. Laminated veneer lumber (plywood, multiplex plywood etc.) [only HW]. Plastomers [only HW]. Duromers [only HW]. Solid surface material (Corian, Varicor, Noblan, etc.) [only HW]. Decorative laminates (HPL-compact laminate, Trespa etc.) [only HW]. Compound materials [only HW]. Non-ferrous metals [only HW].
Machine	Through feed drilling machines, Point-to-point drilling machines, CNC machining centres, Column drilling machines, Drilling machines, Special purpose drilling machines, Portable drills.
Design	**1. Loose countersink for mounting on dowel drills.** The loose countersink is clamped on the shank or heel (for dowel drills or through hole drills with heel). It allows drilling and countersinking in one operation. It is possible to clamp and adjust the loose countersink on the heel of drills with heel.

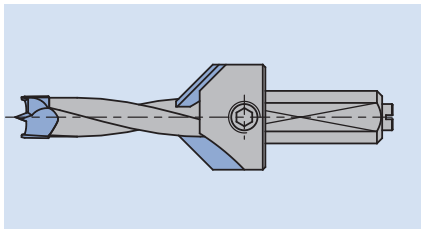

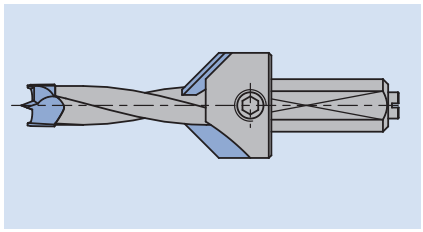

2. Loose countersink for mounting on twist drills.
Countersink with a countersink angle of 90° or 180° can be clamped on twist drills.

3. Single part countersink.
Single part countersinks are used for subsequent countersinking of holes. Nearly all materials can be countersunk with tungsten carbide design. Usually this countersink is used to countersink holes for flush screws.








HW

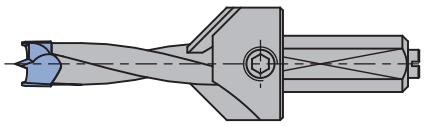

Mounting example fixing on drill shank

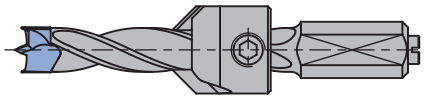

Mounting example fixing on heel

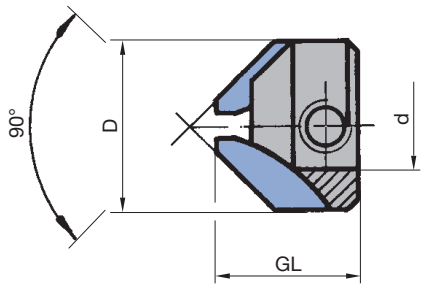

WB 701 0 02
Countersink fixing on drill shank, suitable drill types
WB 120 0 10/11/12/29/30

WB 701 0 03
Countersink fixing on heel, suitable drill types
WB 101 0 05/06
WB 120 0 23/24/26

HW, Z 2

Application:
To countersink and drill in one operation.

Machine:
Point-to-point drilling machines, through feed drilling machines, CNC machining centres, hinge boring machines, multi spindle units, column drilling machines, portable drills.

Workpiece material:
Softwood and hardwood, chipboard and fibre materials (MDF, HDF etc.), uncoated, plastic coated, veneered etc., laminated veneer lumber (plywood, multiplex plywood etc.), plastics (thermoplastic, fibre reinforced etc.), NF-metals (aluminium, copper etc.).

Technical information:
Loose countersink 90°, fixed on the shank of dowel or through hole drills.

Fixed on shank
WB 701 0 02

D mm	GL mm	d mm	D_{Drill} mm	Allan screw mm	ID LH	ID RH
20	17,5	10	6 - 10	M6x5	**034350** ●	**034351** ●

RPM: n = 3000 - 9000 min^{-1}

Spare parts:

BEZ	ABM mm	for S mm	ID
Allen key	SW 3	M6	**005433** ●
Allen screw	M6x5	SW 3	**005836** ●

Technical information:
Loose countersink 90°. Fixed on heel of dowel and through hole drills with double heel. Stepless axial positioning of countersink on heel for variable drilling and countersink depth.

Fixed on heel
WB 701 0 03

D mm	GL mm	d mm	D_{Drill} mm	Allan screw mm	ID LH	ID RH
15,5	17,5	4	4	M5x5		**034371** ●
15,5	17,5	5	5	M5x5	**034372** ●	**034373** ●
15,5	17,5	6	6	M6x5	**034374** ●	**034375** ●
15,5	17,5	8	8	M6x4	**034376** ●	**034377** ●
20	17,5	10	10	M6x5	**034378** ●	**034379** ●

RPM: n = 3000 - 9000 min^{-1}

Spare parts:

BEZ	ABM mm	for S mm	ID
Allen key	SW 2.5	M5	**005432** ●
Allen key	SW 3	M6	**005433** ●
Allen screw	M5x5	SW 2,5	**005805** ●
Allen screw	M6x5	SW 3	**005836** ●
Allen screw	M6x4	SW 3	**005837** ●

● available ex stock
□ available at short notice
Instruction manual visit www.leitz.org









SP

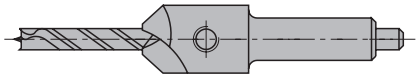

Mounting example
Countersink WB 701 0 01 mounted on drill WB 120 0 05

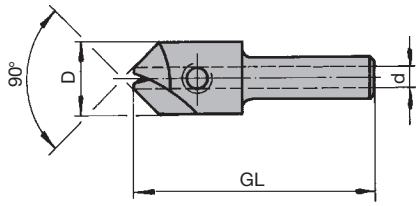

WB 701 0 01, cylindrical shank

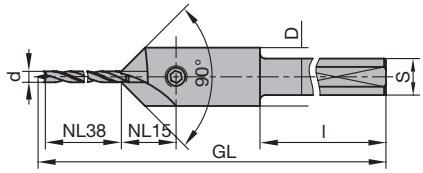

SB 204 0, countersink with drill

SP, Z 2

Application:
To countersink and drill in one operation.

Machine:
Multi spindle unit, column drilling machines, portable drills.

Workpiece material:
Softwood and hardwood.

Technical information:
Loose countersink 90°, to mount on drills WB 120 0 05.

Countersink 90°
WB 701 0 01

D	GL	S	d	QAL	DRI	ID
mm	mm	mm	mm			
16	55	10x30	3	SP	RH	**036250** ●
16	55	10x30	4	SP	RH	**036251** ●
16	55	10x30	5	SP	RH	**036252** ●
16	55	10x30	6	SP	RH	**036253** ●

Countersink 90°, with drill
SB 204 0

D	d	GL	NL	S	QAL	DRI	ID
mm	mm	mm	mm	mm			
16	3	136	38/15	10x60	SP/HS	RH	**036257** □

RPM: n = 3000 - 6000 min^{-1}

Spare parts:

BEZ	ABM	ID
	mm	
Allen key	SW 3	**005433** ●
Allen screw	M6x5	**005836** ●
Twist drill	D3/S3x30/GL70	**035852** ●









HS

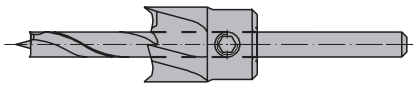

Mounting example
WB 711 0, cylindrical shank

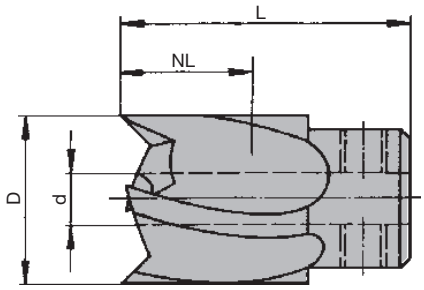

WB 711 0, with 2 clamping screws

HS, Z 2

Application:
To countersink and drill in one operation.

Machine:
Multi spindle units, column drilling machines, portable drills.

Workpiece material:
Softwood and hardwood.

Technical information:
Loose countersink 180°, to mount on drills WB 120 0 05.

Countersink 180°
WB 711 0

D mm	GL mm	NL mm	d mm	QAL	DRI	ID
15	22	10	6	HS	RH	**036301** ●
20	25	12	8	HS	RH	**036303** ●
25	25	12	10	HS	RH	**036305** ●

RPM: n = 3000 - 6000 min^{-1}

Spare parts:

BEZ	ABM mm	BEM	ID
Allen key	SW 2.5	for D = 15 - 25 mm / 180°	**005432** ●
Allen screw	M5x5	for D = 15 - 25 mm / 180°	**005805** ●
Allen key	SW 3	for D = 30 mm / 180°	**005433** ●
Allen screw	M6x5	for D = 30 mm / 180°	**005836** ●

● available ex stock
□ available at short notice
Instruction manual visit www.leitz.org

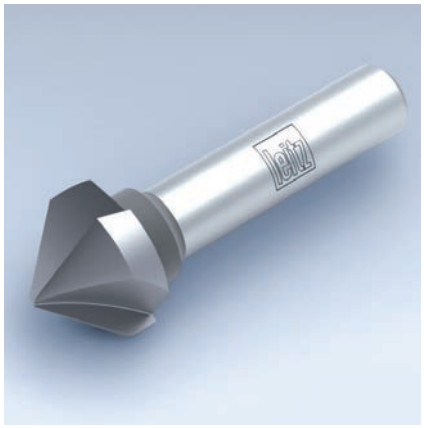







SP

HW

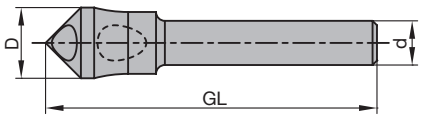

WB 700 0 countersink 90° SP, Z1

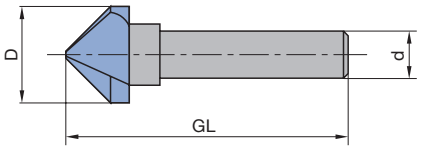

WB 702 0 countersink 90° solid tungsten carbide, Z 3

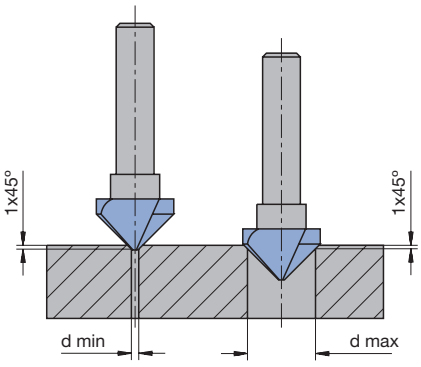

Shank 10 mm

Application:
For the additonal countersinking of holes.

Machine:
Multi spindle units, column drilling machines, portable drills.

Workpiece material:
Softwood and hardwood, chipboard and fibre materials (MDF, HDF etc.), uncoated, plastic coated, veneered etc., laminated veneer lumber (plywood, multiplex plywood etc.), plastics (thermoplastic, fibre reinforced etc.), NF-metals (aluminium, copper etc.).

Technical information:
Countersink 90° Z 1 solid SP (only for softwood and hardwood).
Countersink 90° Z 3 solid tungsten carbide. Special grinded section for clean and chatter-free cut.

Countersink 90°
WB 700 0, WB 702 0

D	GL	S	QAL	DRI	ID
mm	mm	mm			
16	75	10x50	SP	RH	**036220** ●
20,5	58	10x40	HW solid	RH	**036255** ●

RPM: n = 2500 - 6000 min^{-1}

The illustrations shows the smallest and largest hole diameters possible, countersunk with a 1x45° bevel:
Countersink 90° SP:
d_{min} = 4.00 mm, d_{max} = 12.00 mm

Countersink 90° HW:
d_{min} = 2.00 mm, d_{max} = 18.00 mm

Application	To drill stepped holes.
Workpiece material	Softwood and hardwood. Chipboard and fibre materials (MDF, HDF etc.), uncoated, plastic coated, veneered etc. Laminated veneer lumber (plywood, multiplex plywood etc.). Plastomers. Duromers. Solid surface material (Corian, Varicor, Noblan etc.). Compound materials. Non-ferrous metals.
Machine	Through feed drilling machines, Point-to-point drilling machines, CNC machining centres, Column drilling machines, Drilling machines, Special purpose drilling machines, Portable drills.
Design	Step drills are characterized by two drilling operations. The first drill can have either a V point or a centre point with spurs. The second operation can have either a flat 180° counterbore or an angled countersink < 180°.
Technical features	The dimensions listed in the tool tables refer to the following tool parameters:

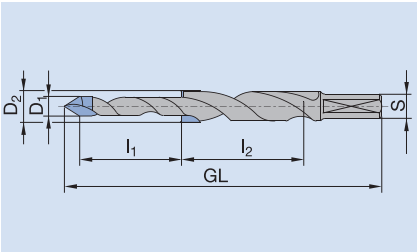

D_1	Diameter, pre-drill
D_2	Diameter, first step
l_1	Working length pre-drill
l_2	Working length, first step
S	Shank diameter x shank length
GL	Total length of the drill bit including the projection to the centre point

Application data	**RPM/feed speeds** The optimum RPM and feed speeds are detailed in the diagrams attached to the tool tables.











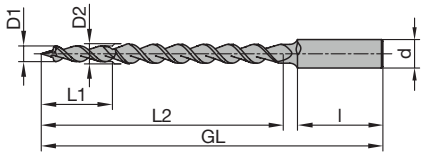

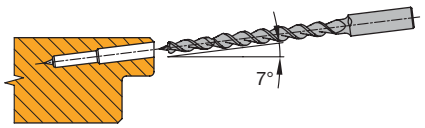

Drilling hole for screwed hinge at an inclined angle of 7° up to 9°

Feed speed v_f depending on the spindle RPM n

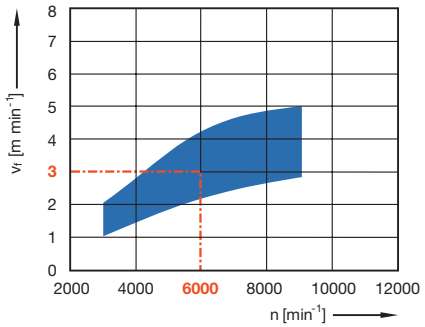

Workpiece material:
Chipboard plastic coated
Operation:
Step drilling
Correction factor for v_f:
MDF, solid wood = 0.7

HW solid, Z 2, Marathon

Application:
To produce stepped holes, particularly for screwed hinge holes for doors.

Machine:
Multi spindle units, CNC machining centres, portable drills.

Workpiece material:
Softwood and hardwood, chipboard and fibre materials (MDF, HDF etc.), uncoated, plastic coated, veneered etc., laminated veneer lumber (plywood, multiplex plywood etc.).

Technical information:
HW solid design, Z 2, two-steps. Extra-long centre point for perfect positioning of the boring bits even on inclined surfaces. Marathon coating for increased performance time.

HW solid, Z 2
WB 201 0

Type	D1 mm	D2 mm	GL mm	L1 mm	L2 mm	S mm	DRI	ID
Anuba 14,5	5,5	7,1	120	25	85	10x30	RH	**035804** ●
Anuba 16	6,2	7,7	120	30	85	10x30	RH	**035805** ●
Anuba 18	7,5	8,8	120	30	85	10x30	RH	**035806** ●
Simons	5,5	6,8	120	25	85	10x30	RH	**035807** ●

RPM: n = 3000 - 9000 min^{-1}

Troubleshooting Chart

Problem	Possible cause	Action
Drill wears quickly	– Feed rate per rotation too low	Increase feed rate or reduce RPM (see charts on product pages)
High wear to spurs	– Tool remains stationary at the reversal point when drilling dowel holes	Reduce RPM or increase acceleration of the feed axis (when possible) Change program
	– Abrasive workpiece material	Select drills with more wear resistant cutting edge material (HW or DP)
Uneven edges (new drill)	– Feed rate per rotation too high as the bit enters or leaves the workpiece	Reduce feed rate or increase RPM (see charts on product pages)
	– Insufficient concentricity of drill	Check concentric clamping of bit and chuck Check spindle and chuck for deformation
	– Insufficient centering on return stroke of the drill	Check spindle and chuck for signs of wear Use drills with heel
Chips and workpiece become hot	– Tool too long at the reversal point when drilling dowel holes	Reduce RPM or increase acceleration of the feed axis (when possible) Change program
Burn marks at the bore wall (new drill)	– Insufficient chip flow	Clear gullet from time to time when drilling deep holes. Select drill type for high chip volumes (e.g. Levin type)
Bore too large	– Error in concentricity or the centre-point is not central	Check boring bit clamping for concentricity. Check boring bit chuck and motor spindle for deformation and wear Check the concentric running of the centre point
Unclean countersunk wood	– Chips jammed between flute and loose countersink	Use one-piece stepped boring bit when machining solid wood
Broken drill	– Wrong application parameters	Reduce feed rate, increase RPM (see charts on product pages)
	– Bore is full of chips	Clear gullet from time to time when boring deep holes. Select boring bit type for large chip quantities (e.g. Levin type).
	– Non-uniform workpiece material	Check workpiece for foreign objects Reduce feed rate
	– Premature loosening of workpiece clamping	Adjust program
	– Worn drilling spindle	Check spindle bearing, repair if necessary
Broken spurs	– High feed rate when drilling hard workpiece materials	Reduce feed rate
	– Workpiece material not suitable for machining with spurs	Grind off spur and chamfer cutting edge at change-over to the minor cutting edge

Worn spurs (abrasive wear)
The natural end of the performance time of a dowel or hinge boring bit is determined by worn spurs by abrasion. The cutting forces on the workpiece surface increase with increasing wear. The surface is subject to severe deformation before it is cut.

Consequently, the edge of the boring hole arches. Coated panel materials will show tear-outs and veneered surfaces crack at the edge of the boring hole. The boring bit must be replaced.

The performance time is set by the quality requirement of the holes. With visible holes such as holes for shelves, drill replacement should be carried out earlier than for holes for dowel joints.

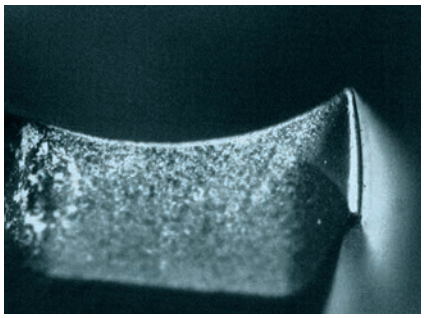
Worn spurs.

Broken spurs
The sharp and precise spurs of dowel and hinge boring bits are prone to mechanical overstress. They can break when used under unfavourable operating conditions.

This can be caused by worn spindles or chucks if the workpiece is not clamped firmly, or by hard foreign objects in the workpiece such as small stones or metal particles.

Broken spurs do not produce a clean cut since the break geometry is random. As a rule, this results in break-outs or tear-outs at the edge of the hole.

If the break geometry is favourable, the drilling quality does not deteriorate immediately. With continued use, these broken spurs are subject to fast abrasive wear. Performance times are considerably reduced. The wear can conceal the damaged spurs.

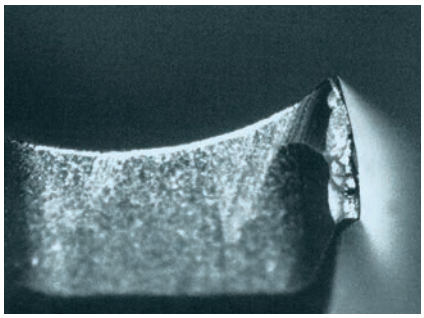
Broken spurs.

Thermal wear
Because of the permanent contact between the cutting edges and the workpiece material and the deep boring depth, operating conditions can occur which lead to heat stress.

Heat stress occurs when the heat developed by the friction at the main cutting edges cannot be dispersed by the chips. This can be caused by the wrong operating conditions such as high RPM at a low feed rate or when the boring bit remains stationary too long at the reversal point when boring dowel holes.

Insufficient chip removal at deep depths or resin build-up at the gullet can also lead to frictional heat.

The structure of the cutting material is destroyed thermally regardless of using HS, HW or DP. HS cutting materials overheat and lose hardness. The binding agent of sintered cutting materials such as HW or DP is attacked, grain breakage at the cutting edge can occur.

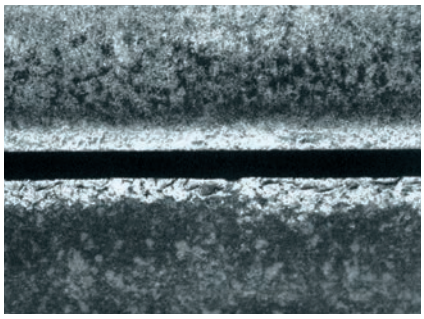
The cutting edges in the illustrations show the difference between abrasive wear (top) and wear caused by heat (bottom).

Enquiry/order form special tools – drilling

Customer details: Customer number: (if known) | ☐ Enquiry ☐ Order | Delivery date: (not binding) CW

Company:

Street: | Date:

Post code/place: | Enquiry/order no.:

Country: | Tool ID: (if known)

Phone/fax: | No. of pieces:

Contact person:

Signature:

Workpiece material:

Type:		
☐ Solid wood	Type:	Type of coating:
☐ Wood-derived material	Type:	Type of coating:
☐ Others	Type:	Type of coating:

Machining:

☐ along grain/across grain (solid wood only)	☐ through hole boring	Boring depth:	mm
☐ in end grain (solid wood only)	☐ pocket boring	Boring depth:	mm

Machine:

Manufacturer:

Type:

Application data:

Feed rate: m/min^{-1}

RPM: min^{-1}

Tool:

Tool type (see selection pages):

Dimensions:

Diameter: mm

Working length: mm

Shank diameter: mm

Total length: mm

No. of teeth:

Cutting material:
- ☐ SP
- ☐ HS
- ☐ HW
- ☐ HW solid
- ☐ DP

Direction of rotation:
- ☐ left hand
- ☐ right hand

Please indicate existing data on tool, machine and workpiece material.

Enquiry/order form special tools – drilling

Illustrations show standard boring bit types – in case of order please indicate dimensions or make a sketch with all dimensions needed (see a bottom).

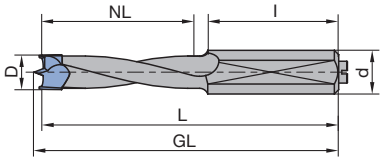

Dowel drill

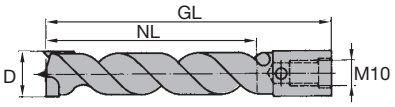

Levin type drill HW/HS Z1/V1

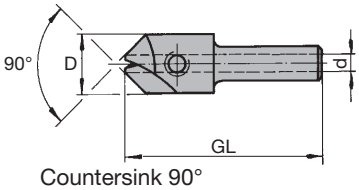

Countersink 90°

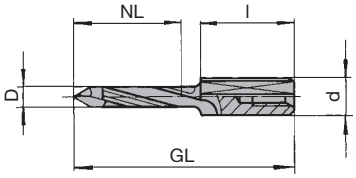

Through hole drilling

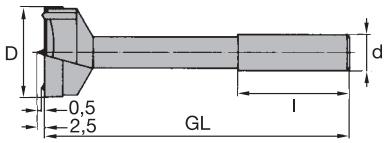

Machine bit

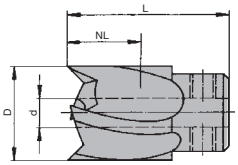

Counterbore 180°

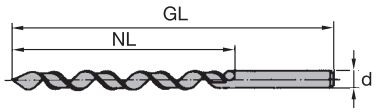

Levin type drill HS V point

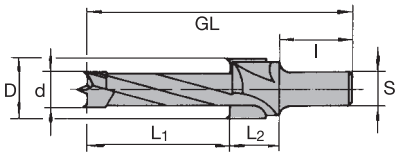

Step drill

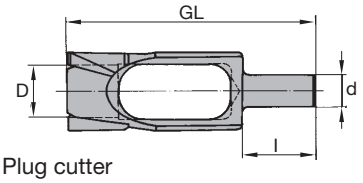

Plug cutter

Enter boring bit dimensions, special shank dimensions, workpiece side to table, face side on top/bottom on sketch.

Key to pictograms



Drilling
blind holes



Drilling
through holes



Step drilling



Counter-sinking

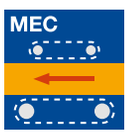

Mechanical
feed



Manual
feed



Solid metal
tool



Tipped tool



Mechanical
knife clamping,
reversible



Alloyed
tool steel



High-speed
steel



Tungsten
carbide



Polycrystalline
diamond (PCD)



Carbide
metal coating

www.leitz.org

SDZ/MA 02/2025 Subject to changes prior to technical developments. © Leitz GmbH & Co. KG

Clamping systems

Leitz Lexicon Edition 7 | Version 2 | 02/2025



Explanation of abbreviations

A	=	dimension A
a_e	=	cutting thickness (radial)
a_p	=	cutting depth (axial)
ABM	=	dimension
APL	=	panel raising length
APT	=	panel raising depth
AL	=	working length
AM	=	number of knives
AS	=	anti sound (low noise design)
b	=	overhang
B	=	width
BDD	=	thickness of shoulder
BEM	=	note
BEZ	=	description
BH	=	tipping height
BO	=	bore diameter
CNC	=	Computerized Numerical Control
d	=	diameter
D	=	cutting circle diameter
D0	=	zero diameter
DA	=	outside Diameter
DB	=	diameter of shoulder
DFC	=	Dust Flow Control (optimised chip clearance)
DGL	=	number of links
DIK	=	thickness
DKN	=	double keyway
DP	=	polycrystalline diamond
DRI	=	rotation
FAB	=	width of rebate
FAT	=	depth of rebate
FAW	=	bevel angle
FLD	=	flange diameter
f_z	=	tooth feed
$f_{z\ eff}$	=	effective tooth feed
GEW	=	thread
GL	=	total length
GS	=	Plunging edge
H	=	height
HC	=	tungsten carbide, coated
HD	=	wood thickness (thickness of workpiece)
HL	=	high-alloyed tool steel
HS	=	high-speed steel (HSS)
HW	=	tungsten carbide (TCT)
ID	=	ident number
IV	=	insulation glazing
KBZ	=	abbreviation
KLH	=	clamping height
KM	=	edge breaker
KN	=	single keyway
KNL	=	combination pinhole consists of 2/7/42 2/9/46,35 2/10/60
L	=	length
l	=	clamping length
LD	=	left hand twist
LEN	=	Leitz standard profiles
LH	=	left hand rotation
M	=	metric thread
MBM	=	minimum order quantity
MC	=	multi-purpose steel, coated
MD	=	thickness of knife
min^{-1}	=	revolutions per minute (RPM)
MK	=	morse taper
m min^{-1}	=	metres per minute
m s^{-1}	=	metres per second
n	=	RPM
$n_{max.}$	=	maximum permissible RPM
NAL	=	position of hub
ND	=	thickness of hub
NH	=	zero height
NL	=	cutting length
NLA	=	pinhole dimensions
NT	=	grooving depth
P	=	profile
POS	=	cutter position
PT	=	profile depth
PG	=	profile group
QAL	=	cutting material quality
R	=	radius
RD	=	right hand twist
RH	=	right hand rotation
RP	=	radius of cutter
S	=	shank dimension
SB	=	cutting width
SET	=	set
SLB	=	slotting width
SLL	=	slotting length
SLT	=	slotting depth
SP	=	tool steel
ST	=	Cobalt-basis cast alloys, e.g. Stellite™
STO	=	shank tolerance
SW	=	cutting angle
TD	=	diameter of tool body
TDI	=	thickness of tool
TG	=	pitch
TK	=	reference diameter
UT	=	cutting edges with irregular pitch
V	=	number of spurs
v_c	=	cutting speed
v_f	=	feed speed
VE	=	packing unit
VSB	=	adjustment range
WSS	=	workpiece material
Z	=	number of teeth
ZA	=	number of fingers
ZF	=	tooth shape (cutting edge shape)
ZL	=	finger length

Notes to the Lexicon concerning the diagrams and tables

The statements made in the diagrams and tables relate to specific conditions and represent parameters from tests subjected to defined conditions. Variations when using tools in individual case due to special application conditions may be possible. Our support team will provide you with detailed information.



7. Clamping systems

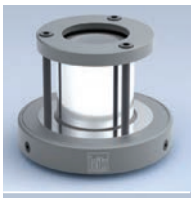

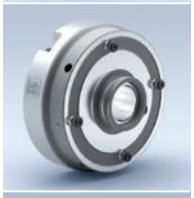





Overview clamping systems		2
7.1.	Clamping elements	6
7.1.1	Hydro clamping - open system	6
7.1.2	Hydro clamping - closed system	7
7.1.3	Clamping sleeves	16
7.2.	Quick clamping elements	20
7.2.1	Hydro clamping - closed system	20
7.2.2	Mechanical clamping	22
7.3.	Clamping chucks	26
7.3.1	Shrink-fit chucks	26
7.3.2	Hydro chucks	32
7.3.3	Collet chucks	34
7.3.4	Weldon chucks	55
7.3.5	Drill adaptors	57
7.4.	Clamping arbors	65
7.4.1	Hydro clamping arbors	65
7.4.2	Cutter arbors	69
7.4.3	Adaptors for circular sawblades	80
Alphabetical product index		84
ID index		85

7. Clamping systems

Adaptors / Tool types	 **Spindle without safety against twisting**	 **Spindle with safety against twisting - keyway**	 **Spindle with safety against twisting - hexagon Spindle D 30 Spindle D 40**	 **Spindle with HSK-F63 modified**
Circular sawblades 	 page 10 7.1.2 Hydro clamping - Closed system - Hydro-Duo clamping element with integrated safety against twisting  page 6 7.1.1 Hydro clamping - Open system - clamping element with clamping nut - clamping element with end ring and clamping screws	 page 16 7.1.3 Clamping sleeves - Flanged sleeve for circular sawblades with BO 65  page 22 7.2.2 Mechanical clamping - Quick clamping element Type 110 for scoring sawblades and cutting tools		 page 72 7.4.2 Arbors - Arbors HSK-F 63 modified A = 12,5, 20, 52 mm
Hoggers 	 page 10 7.1.2 Hydro clamping - Closed system - Hydro-Duo clamping element with integrated safety against twisting	 page 17 7.1.3 Clamping sleeves - Flanged sleeve for cutting- and hogging tools with BO 80  page 24 7.2.2 Mechanical clamping - Quick clamping element Type 160 for cutting- and hogging tools	 page 13 7.1.2 Hydro clamping - Hydro clamping element for cutting- and hogging tools for BO 60 und 80  page 20 7.2.1 Hydro clamping - Closed system - Quick clamping element Type 160 Hydro for cutting- and hogging tools  page 21 7.2.1 Hydro clamping - Closed system - Quick clamping element Type 160 Hydro-Duo for cutting- and hogging tools	 page 72 7.4.2 Arbors - Arbors HSK-F 63 modified A = 12,5, 20, 52 mm
Cutters/ cutterheads  	 page 6 7.1.1 Hydro clamping - Open system - clamping element with clamping nut - clamping element with end ring and clamping screws  page 7 7.1.2 Hydro clamping - Closed system - clamping element with clamping nut - clamping element with end ring and clamping screws	 page 17 7.1.3 Clamping sleeves - Flanged sleeve for cutting- and hogging tools with BO 80  page 22 7.2.2 Mechanical clamping - Quick clamping element Type 110 for scoring sawblades and cutting tools	 page 13 7.1.2 Hydro clamping - Closed system - Hydro clamping element for cutting- and hogging tools for BO 60 und 80  page 11 7.1.2 Hydraulic clamping - Closed system - Hydro-clamping element for spindle d 40 for tool with bore 60  page 12 - Hydro-clamping element for spindle d 30 and for tools with bore 60	 page 63 7.4.1 Hydro clamping arbors - Hydro clamping arbor HSK-F 63 mod. for tools with bore 60  page 64 7.4.1 Hydro clamping arbors - Hydro clamping arbor HSK-F 63 mod. with stepless fine adjustment for tools with bore 60  page 72 7.4.2 Arbors - Arbors HSK-F 63 modified A = 12,5, 20, 52 mm

7. Clamping systems

Adaptors / Tool types	 **Spindle without safety against twisting**	 **Spindle with safety against twisting - keyway**	 **Spindle with safety against twisting - hexagon Spindle D 30 Spindle D 40**	 **Spindle with HSK-F63 modified**
Cutters/ cutterheads  	 page 10 7.1.2 Hydro clamping - Closed system - Hydro-Duo clamping element with integrated safety against twisting	 page 24 7.2.2 Mechanical clamping - Quick clamping element Type 160 for cutting- and hogging tools	 page 20 7.2.1 Hydro clamping - Closed system - Quick clamping element Type 160 Hydro for cutting- and hogging tools  page 21 7.2.1 Hydro clamping - Closed system - Quick clamping element Type 160 Hydro-Duo for cutting- and hogging tools	
Hogger sets/ cutterhead sets  	 page 6 7.1.1 Hydro clamping - Open system - clamping element with clamping nut - clamping element with end ring and clamping screws  page 7 7.1.2 Hydro clamping - Closed system - clamping element with clamping nut - clamping element with end ring and clamping screws  page 8 7.1.2 Hydro clamping - Closed system - Clamping element with end ring Clamping screws and safe against twisting  page 9 7.1.2 Hydro clamping - Closed system - Hydro-Duo clamping element with 2 chambers, axial piston clamping and fine adjustment  page 18 7.1.3 Clamping sleeves - Clamping sleeve with end ring and safety against twisting - Spindle filling spacers with safety against twisting  page 19 7.1.3 Clamping sleeves - Reduction sleeve with collar - Reduction sleeve without collar		 page 11 7.1.2 Hydraulic clamping - Closed system - Hydro-clamping element for spindle d 40 and for toolsets with bore 60  page 12 - Hydro-clamping element for spindle d 30 and for tool with bore 60  page 14 7.1.2 Hydro clamping - Closed system - Hydro-Duo clamping element with double piston clamping and fine adjustment  page 15 7.1.2 Hydro clamping - Closed system - Hydro-Duo clamping element with 2 chambers axial piston clamping and fine adjustment	 page 63 7.4.1 Hydro clamping arbors - Hydro clamping arbor HSK-F 63 mod. for tools with bore 60  page 64 7.4.1 Hydro clamping arbors - Hydro clamping arbor HSK-F 63 mod. with stepless fine adjustment for tools with bore 60  page 72 7.4.2 Arbors - Arbors HSK-F 63 modified A = 12,5, 20, 52 mm

7. Clamping systems

Adaptors / Tool types	 **SK 30**	 **BT 30** **BT 35**	 **SK 40**	 **HSK-F 50**
Router cutters 	 page 27 7.3.1 Shrink-fit chucks  page 36 page 37 page 38 7.3.3 Collet chucks	 page 39 7.3.3 Collet chucks	 page 27 7.3.1 Shrink-fit chucks  page 38 7.3.3 Collet chucks	 page 40 page 41 7.3.3 Collet chucks
Cutter-heads with shank 	 page 27 7.3.1 Shrink-fit chucks  page 36 page 37 page 38 7.3.3 Collet chucks	 page 39 7.3.3 Collet chucks	 page 27 7.3.1 Shrink-fit chucks  page 38 7.3.3 Collet chucks	 page 40 page 41 7.3.3 Collet chucks
Tools with borehole 	 page 68 page 69 7.4.2 Arbors	 page 67 7.4.2 Arbors +  page 39 7.3.3 Collet chucks	 page 68 page 69 7.4.2 Arbors	 page 67 7.4.2 Arbors +  page 40 page 41 7.3.3 Collet chucks
Circular sawblades 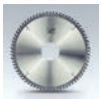	 page 79 7.4.3 Adaptors for sawblades +  page 68 page 69 7.4.2 Arbors		 page 79 7.4.3 Adaptors for sawblades +  page 68 page 69 7.4.2 Arbors	
Drills with cylindrical shank 	 page 27 7.3.1 Shrink-fit chucks  page 36 page 37 page 38 7.3.3 Collet chucks  page 61 7.3.5 Drill chucks	 page 39 7.3.3 Collet chucks	 page 27 7.3.1 Shrink-fit chucks  page 38 7.3.3 Collet chucks  page 61 7.3.5 Drill chucks	 page 40 page 41 7.3.3 Collet chucks
Drills with cylindrical shank with clamping area 	page 27 7.3.1 Shrink-fit chucks page 36 page 37 page 38 7.3.3 Collet chucks page 61 7.3.5 Drill chucks	page 39 7.3.3 Collet chucks	page 27 7.3.1 Shrink-fit chucks page 38 7.3.3 Collet chucks page 61 7.3.5 Drill chucks	page 40 page 41 7.3.3 Collet chucks

7. Clamping systems

 **HSK-E 63**	 **HSK-F 63**	 **HSK 85 WS**	 **Threaded shank with/ without tapered seating**
 page 28 7.3.1 Shrink-fit chucks  page 42 page 43 7.3.3 Collet chucks	 page 28 7.3.1 Shrink-fit chucks  page 32 7.3.2 Hydro chucks  page 44 page 45 page 46 7.3.3 Collet chucks	 page 47 7.3.3 Collet chucks	
 page 28 7.3.1 Shrink-fit chucks  page 42 page 43 7.3.3 Collet chucks	 page 28 7.3.1 Shrink-fit chucks  page 32 7.3.2 Hydro chucks  page 44 page 45 page 46 7.3.3 Collet chucks	 page 47 7.3.3 Collet chucks	
 page 63 7.4.1 Hydro clamping arbors  page 70 7.4.2 Arbors	 page 63 7.4.1 Hydro clamping arbors  page 71 7.4.2 Arbors	 page 65 7.4.1 Hydro clamping arbors  page 73 page 74 page 75 7.4.2 Arbors	
 page 79 7.4.3 Adaptors for circular saws +  page 70 7.4.2 Arbors	 page 79 7.4.3 Adaptors for multi purpose saws +  page 71 7.4.2 Arbors  page 78 7.4.3 Adaptors for circular saws		
 page28 7.3.1 Shrink-fit chucks  page 42 page 43 7.3.3 Collet chucks  page 61 7.3.5 Drill chucks	 page 28 7.3.1 Shrink-fit chucks  page 44 page 45 page 46 7.3.3 Collet chucks  page 61 7.3.5 Drill chucks		
 page 28 7.3.1 Shrink-fit chucks  page 42 page 43 7.3.3 Collet chucks  page 61 7.3.5 Drill chucks	 page 28 7.3.1 Shrink-fit chucks  page 44 page 45 page 46 7.3.3 Collet chucks  page 61 7.3.5 Drill chucks		 page 58 7.3.5 Drill chucks quick clamping design page 57 7.3.5 Conventional drill chucks









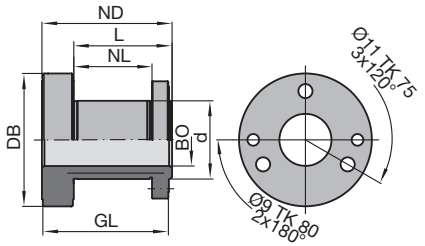

Hydro-Duo clamping element PH 130 0 01 with clamping nut

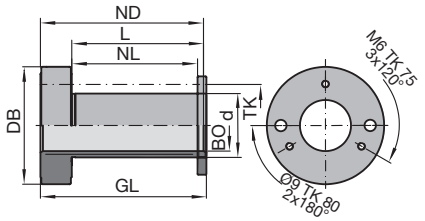

Hydro-Duo clamping element PH 130 0 02 with end ring and clamping screws

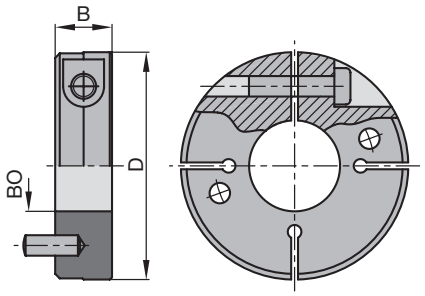

Clamping collar without thread

For spindle without safety device against twisting

Application:
Clamping sleeve for centric, play-free clamping of tools and cutterheads.

Machine:
Machines with high precision spindles e.g. moulders etc.

Technical information:
Hydro-Duo open clamping system, activation of hydro clamping by a grease gun. Suitable for right and left hand rotation.

With clamping nut
PH 130 0 01

d	BO	NL	L	GL	ND	DB	ID
mm	mm	mm	mm	mm	mm	mm	
60	40	60	75	100	100	102	**030503** ●
60	50	60	75	100	100	102	**030507** ●
60	50	40	55	80	80	102	**030515** ●

Spare parts:

BEZ	ABM mm	ID
Sickle spanner adjustable	D90/155; L290; DIN1816; tenon 6	**005462** ●
Grease gun		**008239** ●
Grease cartridge	for Hydro sleeve	**007934** ●
Grease nipple	M10x1	**007935** ●

With end ring and clamping screws
PH 130 0 02

d	BO	NL	L	GL	ND	DB	TK	ID
mm	mm	mm	mm	mm	mm	mm	mm	
50	40	98	105	130	100	92	65	**030600** ●
60	50	98	105	130	130	102	75	**030602** ●

Spare parts:

BEZ	ABM mm	ID
Allen key	SW 5	**005452** ●
Grease gun		**008239** ●
Grease cartridge	for Hydro sleeve	**007934** ●
Grease nipple	M10x1	**007935** ●
Cylindrical screw with ISK	M6x70	**005936** ●
Cylindrical screw with ISK	M6x120	**005942** ●

Clamping collars without thread
TD 870 0

D	B	BO	ID
mm	mm	mm	
100	25	40	**030700** ●
100	25	45	**030701** ●
100	25	50	**030702** ●

● available ex stock
□ available at short notice
Instruction manual visit www.leitz.org









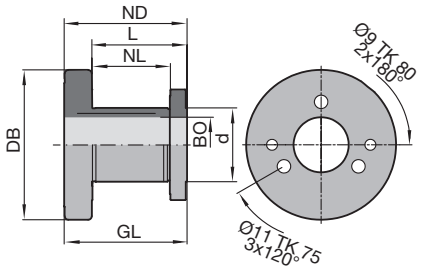

Hydro-Duo clamping element
PH 130 0 05 with clamping nut

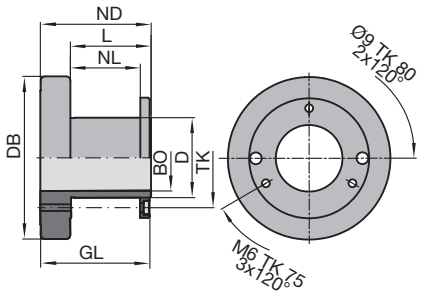

Hydro-Duo clamping element
PH 130 0 06 with end ring and clamping screws

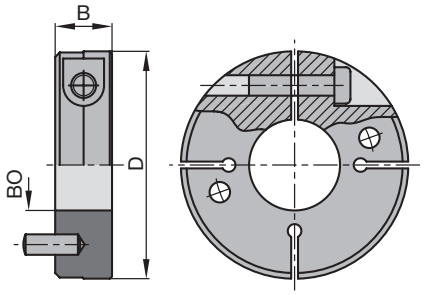

Clamping collar without thread

For spindle without safety device against twisting

Application:
Clamping sleeve for centric clamping of tools, tool sets and cutterheads.

Machine:
Machines with high precision spindles, e.g. moulders, double-end tenoners, edgebanding machines, window production machines etc.

Technical information:
Hydro-Duo closed hydro clamping system, activation of hydro clamping by internal clamping system without grease gun. Suitable for right and left hand rotation.

With clamping nut
PH 130 0 05

d mm	BO mm	NL mm	L mm	GL mm	ND mm	DB mm	ID
60	50	63	77	100	100	122	**031601** ●
70	60	43	57	80	80	130	**031604**

Spare parts:

BEZ	ABM mm	ID
Sickle spanner adjustable	D90/155; L290; DIN1816; tenon 6	**005462** ●

With end ring and clamping screws
PH 130 0 06

d mm	BO mm	NL mm	L mm	GL mm	ND mm	DB mm	TK mm	ID
60	50	52	60	83	83	122	75	**031650** ●

Spare parts:

BEZ	ABM mm	ID
Allen key	SW 5	**005452** ●
Cylindrical screw with ISK	M6x70	**005936** ●

Clamping collars without thread
TD 870 0

D mm	B mm	BO mm	ID
100	25	45	**030701** ●
100	25	50	**030702** ●









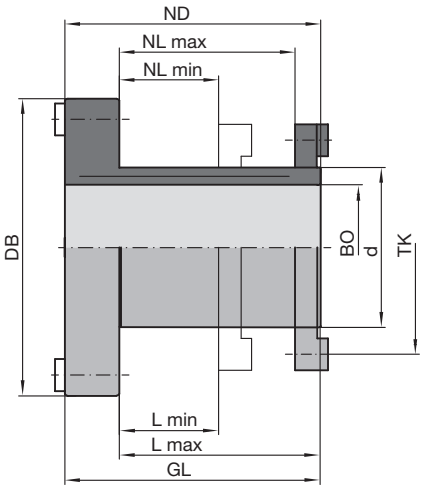

Hydro-Duo clamping element
PH 130 0 13 with end ring, clamping screws and safety device against twisting

For spindle without safety device against twisting

Application:
Clamping sleeve for centric, play-free clamping of tool sets, for window tools on stacked spindle machines.

Machine:
Machines with high precision spindles, e.g. moulders, double-end tenoners, edgebanding machines, window production machines etc.

Technical information:
Hydro-Duo closed hydro clamping system, activation of hydro clamping by internal clamping system without grease gun.
Total length of sleeves adjusted as required.

With end ring, clamping screws and safety device against twisting
PH 130 0 13

d	BO	NL	L	GL	ND	DB	TK	ID
mm	mm	mm	mm	mm	mm	mm	mm	
50	40	35 - 55	43 - 63	80	80	93	65	**031658** ●
50	40	55 - 75	63 - 83	100	100	93	65	**031659** ●
50	40	75 - 95	83 - 103	120	120	93	65	**031660** ●
60	40	95 - 115	103 - 123	140	140	93	75	**031661** ●
60	50	35 - 55	43 - 63	80	80	93	75	**031655** ●
60	50	55 - 75	63 - 83	100	100	93	75	**031652** ●
60	50	75 - 95	83 - 103	120	120	93	75	**031653** ●
60	50	95 - 115	103 - 123	140	140	93	75	**031654** ●
60	50	115 - 135	123 - 143	160	160	93	75	**031657** ●

Spare parts:

BEZ	ABM	BEM	ID
	mm		
Cylindrical screw with ISK	M6x50		**005932** ●
Cylindrical screw with ISK	M6x70		**005936** ●
Cylindrical screw with ISK	M6x90		**005939** ●
Cylindrical screw with ISK	M6x100		**005940** ●
Cylindrical screw with ISK	M6x110		**005941** ●
Cylindrical screw with ISK	M6x130		**006542** ●
Cylindrical screw with ISK	M6x150		**006400** ●
Countersink screw, Torx® 15	M4x6	for feather key 3	**007436** ●
Countersink screw, Torx® 15	M4x10-12.9	for feather key 1,2,4	**007437** ●
Feather key 1	19x8x7		**008525** ●
Feather key 2	10x8,5x6,5		**008526** ●
Feather key 3	19x8x3,5		**008527** ●
Allen key	SW 5		**005452** ●
Torx® key	Torx® 15		**117507** ●

End ring with safety device against twisting
TR 112 0

D	BO	TK	B	ID
mm	mm	mm	mm	
85	50	65	8	**008245**
93	60	75	8	**008222** ●

● available ex stock
□ available at short notice
Instruction manual visit www.leitz.org









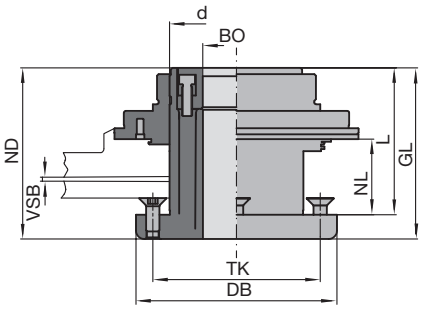

Hydro-Duo clamping element with axial piston clamping and fine adjustment
PH 130 0 11

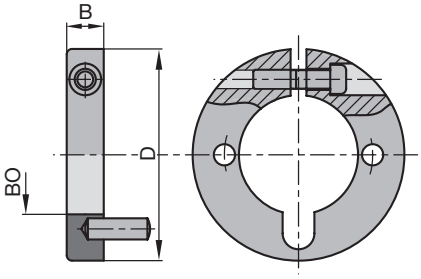

Clamping collar without thread

Spindle without safety device against twisting - Hydro-Duo clamping sleeve with stepless fine adjustment of 2 part tool sets

Application:
Hydro-Duo clamping sleeve with fine thread and axial piston clamping for stepless adjustment of 2 part tool sets. Additional clamping collar with safety device against twisting.

Machine:
Machines with high precision spindles, e.g. moulders, double-end tenoners, edgebanding machines etc.

Technical information:
High precision fine thread adjustment with a 0.01 mm scale for fine adjustment of 2 part cuttersets with repeatability. Adjustment range 10 mm. Maintenance free hydro clamping mechanism.

With Hydro-Duo 2 chamber axial piston clamping and fine adjustment
PH 130 0 11

d mm	BO mm	BO in	NL mm	L mm	GL mm	ND mm	DB mm	VSB	TK mm	ID
80	40		33,5 - 43,5	88	108	108	120	10	100	**031555** □
100	50		60 - 70	102	117	117	140	10	120	**030566** ●
100	53,97	2 1/8“	60 - 70	102	112	117	140	10	120	**031552** ●

Spare parts:

BEZ	ABM mm	ID
Allen key	SW 5	**005452** ●

Clamping collars without thread
TD 870 0

D mm	B mm	BO mm	BO in	ID
80	14	40		**030713**
80	14	45		**030714**
80	14	50		**030716**









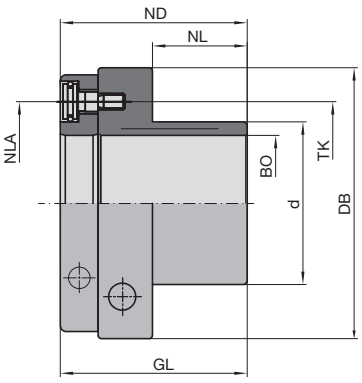

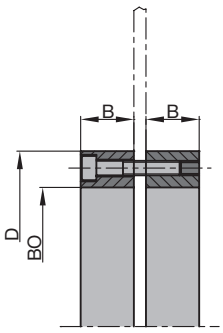

Set of spacers

For spindle without safety device against twisting - Hydro-Duo clamping sleeve for saws, cutters and hoggers

Application:
Hydro-Duo clamping sleeve for high precision clamping and flexible positioning of saws, cutters and hoggers on spindles without using spacers or spindle nuts.

Machine:
Multi-blade circular saw machines, four-sided moulders, double-end tenoners etc.

Technical information:
Closed hydro clamping system with maintenance free pressure piston mechanism.

With integrated safety device against twisting
PH 130 0 10

d	BO	NLA	NL	L	GL	ND	DB	TK	ID
mm	mm	mm	mm	mm	mm	mm	mm	mm	
60	40	3/M6/75	35	35	69	69	100	75	**030572** ●
60	50	3/M6/75	35	35	69	69	100	75	**030574** ●
90	70	6/M6/106	35	35	70	70	120	106	**030571**
115	100	6/M6/131	14	14	49,5	49,5	145	131	**030557** ●
115	100	6/M6/131	48,5	48,5	84	84	145	131	**030555** ●

with clamping screws.

Spacer set, aluminium screwed, for mounting saws
AT 102 0

D	B	BO	NLA	ID
mm	mm	mm	mm	
120	30	90	6/7/106	**028482**
145	44	115	6/7/131	**028480** ●

Steel spacers, for mounting sets of sawblades
TR 100 0

D	B	BO	NLA	ID
mm	mm	mm	mm	
120	0,5	90	8/7/106	**028679** ●
120	1	90	8/7/106	**028680** ●
145	0,5	115	8/7/131	**028683** ●
145	1	115	8/7/131	**028684** ●
145	3	115	8/7/131	**028685**
145	5	115	8/7/131	**028686**

Bore pattern for tools for mounting on:

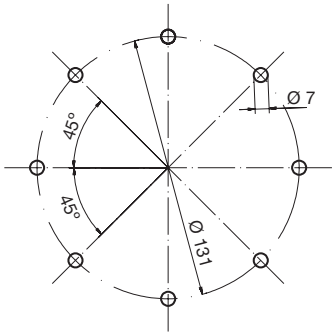

Hydro sleeve ID **030555** and **030557**

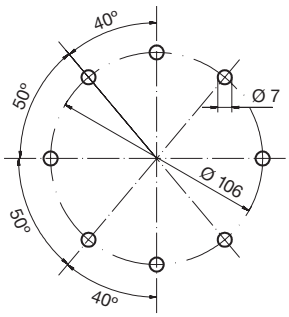

Hydro sleeve ID **030571**

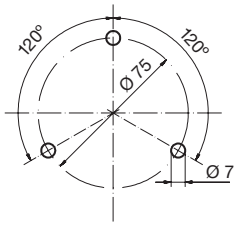

Hydro sleeve ID **030572** und **030574**

● available ex stock
□ available at short notice
Instruction manual visit www.leitz.org

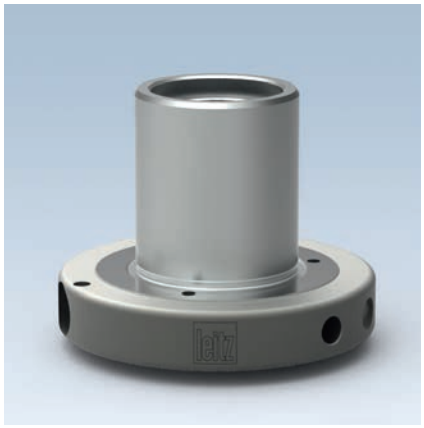







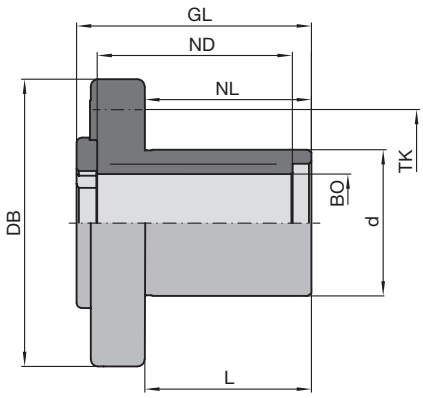

Hydro Duo clamping element
PH 130 0 04

Spindle with safety device against twisting - hexagon HF spindle 40 Hydro-Duo clamping sleeve

Application:
Hydro-Duo clamping element for play-free clamping of cutting tools on high precision spindle with hexagon safety device against twisting (HF spindle) for high concentricity.

Machine:
Machines with high precision spindles, e.g. moulders, double-end tenoners, edgebanding machines etc.

Technical information:
Closed hydro clamping system with maintenance free pressure piston mechanism.
RPM n_{max} 12000 min^{-1}.
Attention: Comply with maximum admissible speed for the mounted tools!

With end ring and clamping screws, for tool sets with bore 60 mm
PH 130 0 04

d	BO	NL	L	GL	ND	DB	TK	ID
mm	mm	mm	mm	mm	mm	mm	mm	
60	40	68	68	96,5	88	118	75	**030559** ●

Spindle fixture consisting of:
Conical spring washer, clamping screw, hexagon spanner, brace.

Spare parts:

BEZ	ABM mm	ID
Securing part	for HF-spindle HF 40	**066473** ●
Allen key	SW 5	**005452** ●









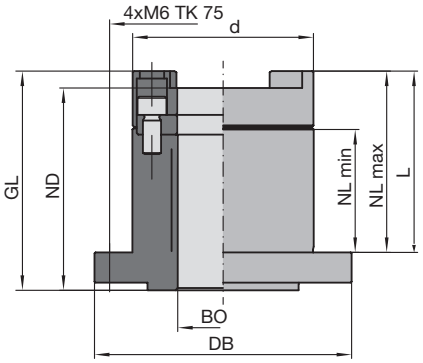

Hydro clamping sleeve PH 130 0

Spindle with safety device against twisting - hexagon HF spindle 30 Hydro clamping sleeve

Application:
Hydro clamping sleeve for play-free clamping of cutting tools on high precision spindle with hexagon safety device against twisting (HF spindle 30) for high concentricity.

Machine:
Machines with high precision spindles diameter 30 mm, e.g. edgebanding machines, double-end tenoners, moulders etc.

Technical information:
Closed hydro clamping system with maintenance free pressure piston mechanism. User friendly axial handling of the hydro clamping screw from top. Safety against twisting on the spindle through an appropriate hexagon in the spindle fixture.
RPM n_{max} 12000 min^{-1}.
Attention: Comply with maximum admissible speed for the mounted tools!

For cutting tools with bore 60 mm
PH 130 0

d	BO	NL	L	GL	ND	DB	TK	ID
mm	mm	mm	mm	mm	mm	mm	mm	
60	30	40 - 60	60	72,5	67	85	75	**030567** ●

Spindle securing part consists of:
Securing parts, clamping screw, hexagon spanner, brace.

Spare parts:

BEZ	ABM	ID
	mm	
Securing part	for HF-spindle HF 30	**066563** ●
Allen key	SW 5, L 150	**005501** ●

● available ex stock
□ available at short notice
Instruction manual visit www.leitz.org









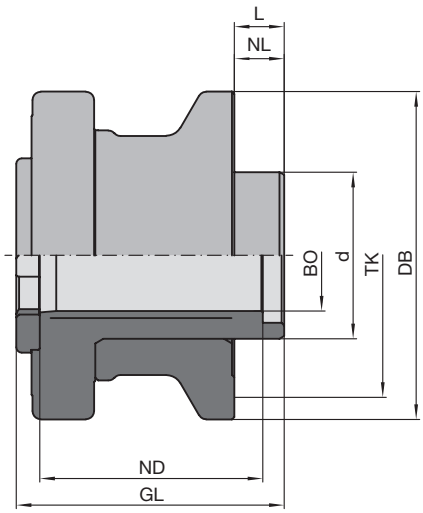

Hydro clamping sleeve PH 130 0 03

Spindle with safety device against twisting - hexagon HF spindle 40 Hydro clamping sleeve

Application:
Hydro clamping sleeve for play-free clamping of hogging/cutting tools on high precision spindle with hexagon safety device against twisting (HF spindle) for high concentricity.

Machine:
Machines with high precision spindles, e.g. moulders, double-end tenoners, edgebanding machines etc.

Technical information:
Closed hydro clamping system with maintenance free pressure piston mechanism.
RPM n_{max} 12000 min^{-1}.
Attention: Comply with maximum admissible speed for the mounted tools!

For cutting tools and hoggers with bore 60/80 mm
PH 130 0 03

d	BO	NL	L	GL	ND	DB	TK	ID
mm	mm	mm	mm	mm	mm	mm	mm	
60	40	18	18	96,5	80,3	118	100	**061702** ●
80	40	18	18	96,5	80,3	118	100	**061703** ●

Spindle fixture consisting of:
Conical spring washer, clamping screw, hexagon spanner, brace.

Spare parts:

BEZ	ABM mm	ID
Securing part	for HF-spindle HF 40	**066473** ●









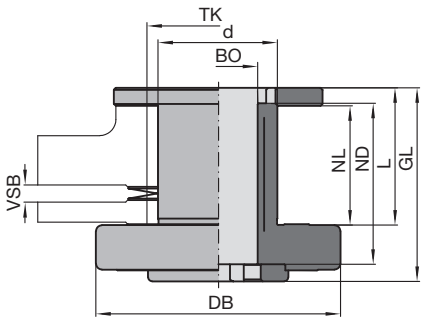

Hydro-Duo clamping sleeve with fine adjustment PH 130 0 07

Spindle with safety device against twisting - hexagon HF spindle 40 Hydro-Duo clamping sleeve, adjustable

Application:
Hydro-Duo clamping sleeve for play-free clamping of cutting tools on high precision spindle with hexagon safety device against twisting (HF spindle). With extra fine thread and dual piston clamping for stepless adjustment of 2 part tool sets on the spindle.

Machine:
Machines with high precision spindles, e.g. moulders, double-end tenoners, edgebanding machines etc.

Technical information:
Closed hydro clamping system with maintenance free pressure piston mechanism. RPM n_{max} 12000 min^{-1}. Dual piston clamping, independent clamping: sleeve - spindle and sleeve - tool.
Attention: Comply with maximum admissible speed for the mounted tools!

With dual piston clamping and hexagon safety device against twisting, fine adjustment
PH 130 0 07

d	BO	NL	L	GL	ND	DB	TK	VSB	ID
mm	mm	mm	mm	mm	mm	mm	mm		
60	40	57 - 59	68	96,5	80	122	75	2	**030553** ●
60	40	49 - 59	68	106,5	80	122	75	10	**030556** ●

Included in delivery: Duo sleeve complete with parts for mounting cutter and adjusting mechanism.

Spare parts:

BEZ	ABM	ID
	mm	
Allen key	SW 5	**005452** ●

● available ex stock
□ available at short notice
Instruction manual visit www.leitz.org









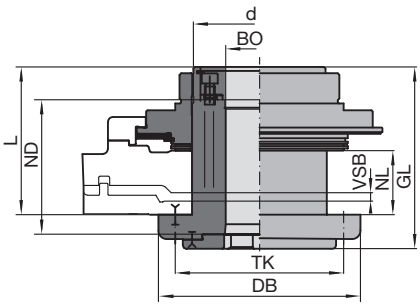

Hydro-Duo clamping element with axial piston clamping and fine adjustment
PH 130 0 14

Spindle with safety device against twisting - hexagon HF spindle 40 Hydro-Duo clamping sleeve, adjustable

Application:
Hydro-Duo clamping sleeve for play-free clamping of cutting tools on high precision spindle with hexagon safety device against twisting (HF spindle). Model with extra fine thread and axial dual piston clamping for stepless adjustment of 2 part tool sets on the spindle.

Machine:
Machines with high precision spindles, e.g. moulders, double-end tenoners, edgebanding machines etc.

Technical information:
Closed Hydro-Duo clamping system with axial dual piston clamping, independent clamping: sleeve - spindle and sleeve - tool.

With dual piston clamping and hexagon safety device against twisting, fine adjustment
PH 130 0 14

d mm	BO mm	NL mm	L mm	GL mm	ND mm	DB mm	TK mm	VSB	ID
80	40	33,5 - 43,5	88	108	80	120	100	10	**031560** ●
80	40	44,4 - 54,4	88	108	80	120	100	10	**030562** □

Spare parts:

BEZ	ABM mm	ID
Allen key	SW 5	**005452** ●





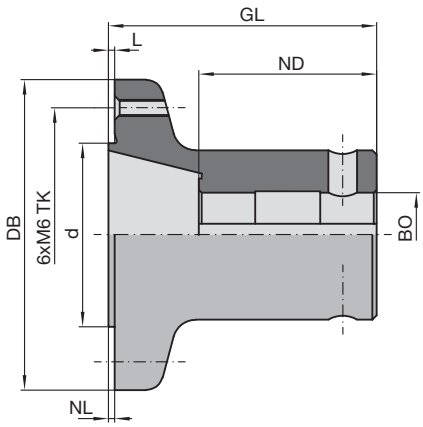

Flanged sleeve TB 300 0

Flanged sleeve

Application:
Flanged sleeve for mounting scoring and grooving sawblades.

Machine:
Double-end tenoners, edgebanding machines etc.

Technical information:
For standard spindle (DKN). Case hardened steel tool body with high concentricity. Spindle fixing parts are supplied by the machine manufacturer.

For circular sawblades with bore 65 mm
TB 300 0

Machine	d mm	BO mm	NL mm	L mm	GL mm	ND mm	DB mm	TK mm	ID
Homag, IMA	65	30 DKN	2,2	2,2	95	63	110	90	**065600** ●
Homag, IMA	65	35 DKN	2,2	2,2	95	63	110	90	**065606** ●

When ordering ID **65600**, check whether locking disk ID **66567** is required.

Spare parts:

BEZ	Machine	ABM mm	ID
Countersink screw with ISK		M6x10	**005780** ●
Spindle fixture left for sleeve ID 65600	Homag, IMA	48x24x18	**066561** ●
Spindle fixture right for sleeve ID 65600	Homag, IMA	48x24x18	**066562** ●
Spindle fixture left for sleeve ID 65606	Homag, IMA	60x18x21	**116015** ●
Spindle fixture right for sleeve ID 65606	Homag, IMA	60x18x21	**116016** ●
Locking disc for sleeve ID 65600	Homag, IMA	40x9x17	**066567** ●

● available ex stock
□ available at short notice
Instruction manual visit www.leitz.org

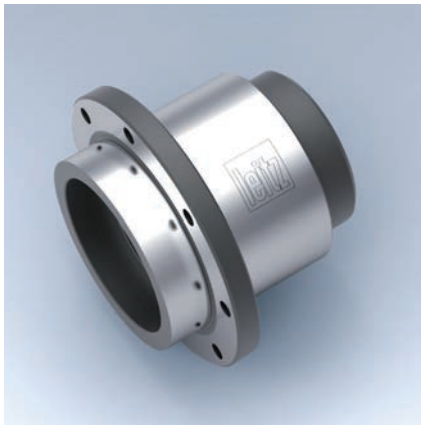



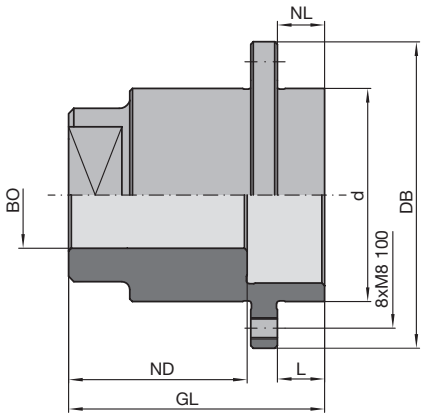

Flanged sleeve TB 300 0

Flanged sleeve

Application:
Flanged sleeve for mounting hoggers, segment hoggers, solid hoggers and folding hoggers.

Machine:
Double-end tenoners, finger joint machines, edgebanding machines etc.

Technical information:
For standard spindle (with or without keyway). Case hardened steel tool body with high concentricity. Spindle fixing parts are supplied by the machine manufacturer.

For cutting and hogging tools with bore 80 mm
TB 300 0, TB 300 0 01, TB 300 0 03, TB 300 0 06, TB 300 0 08, TB 300 0 11, TB 300 0 12

	Machine	d mm	BO mm	NL mm	L mm	GL mm	ND mm	DB mm	TK mm	ID
	Schwabedissen	80	40 DKN	17,7	17,7	82	53	115	100	**061654** ●
	Torwegge	80	35 DKN	17,7	17,7	90	63	115	100	**061655**
	Celaschi	80	35 KN	17,7	17,7	95	65	115	100	**061652** ●
	Grecon, Weinig	80	30 KN	17,7	17,7	75	45	115	100	**061660** ●
	Homag, IMA	80	35 DKN	17,7	17,7	90	63	115	100	**061650** ●
	Homag	80	35 DKN	17,7	17,7	104	63	115	100	**061685**
*	Gabbiani	80	40 DKN	17,7	17,7	82	52	115	100	**061657** ●
	Dimter, Grecon, Weinig	80	40 DKN	12,7	12,7	59	44	113	100	**061679** ●

* = L and KLH values include 13 mm spacer thickness.

Spare parts:

BEZ	ABM mm	ID
Cylindrical screw with ISK	M8x18	**005945** ●
Cylindrical screw with ISK	M8x20	**005946** ●





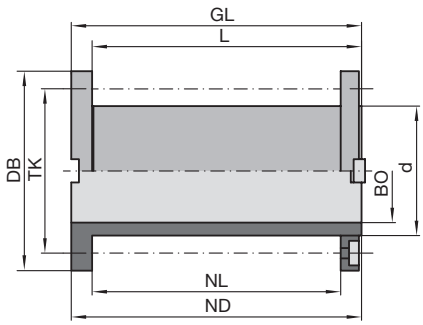

Clamping sleeve TB 260 0 with end ring and safety device against twisting

Clamping sleeve with end ring

Application:
Clamping sleeve for mounting sets of single tools.

Machine:
Spindle moulders, moulders, double-end tenoners, edgebanding machines and window production machines.

Technical information:
Suitable for the use with several tool sets mounted on top of each other e.g. stacked spindle machines.

With end ring and safety device against twisting
TB 260 0

d mm	BO mm	NL mm	L mm	GL mm	ND mm	DB mm	TK mm	ID
50	40	96	104	112	112	77	65	**029676** ●
60	40	96	104	112	112	90	75	**029677** ●
60	40	84	92	100	100	90	75	**029678** ●
60	50	84	92	100	100	90	75	**029679** ●
60	50	79	87	95	95	90	75	**029680** ●
60	50	64	72	80	80	90	75	**029697** ●

Spare parts:

BEZ	for L mm	ABM mm	ID
Cylindrical screw with ISK	72	M6x74	**007075** ●
Cylindrical screw with ISK	92	M6x94	**007077** ●
Cylindrical screw with ISK	104	M6x106	**007078** ●
Countersink screw, Torx® 15		M4x10-12.9	**007437** ●
Feather key		B 8x7x16	**008506** ●
Allen key		SW 5	**005452** ●
Torx® key		Torx® 15	**117507** ●

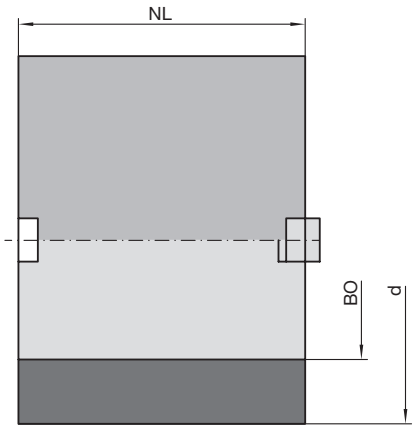

Spacer with safety device against twisting

Application:
Spacer element for use with clamping sleeves with safety device against twisting to fill free spindle lengths.

Spindle filler spacers with safety device against twisting
TR 112 0

d mm	BO mm	NL mm	ID
77	50	60	**027875**
77	50	80	**027876**
77	50	100	**027878**

● available ex stock
□ available at short notice
Instruction manual visit www.leitz.org

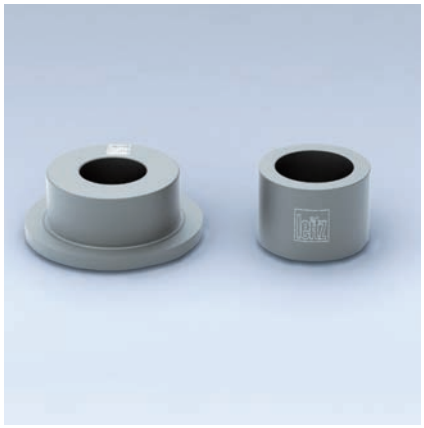

Reducing sleeve

Application:
Reducing sleeve with/without flange for cutting tools and tool sets for use on spindles of various diameters.

Machine:
Spindle moulders, plug cutters etc.

Technical information:
The length of the reducing sleeve should be approximately 2 mm shorter than the width of the hub or the total height of the tool/tool set.
For safety reasons, the use of reducing sleeves should be avoided if possible.



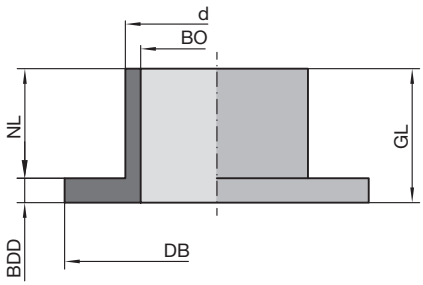

Reducing sleeve TB 200 0 with flange

With flange
TB 200 0

d mm	BO mm	BO in	NL mm	GL mm	DB mm	BDD mm	ID
30	25		18	22	50	4	**028201**
35	30		18	23	55	5	**028204** ●
40	30		18	24	60	6	**028206** ●
40	35		18	24	60	6	**028207** ●
40	31,75	1 1/4“	18	24	60	6	**028220**
50	30		18	24	70	6	**028208** ●
50	35		18	24	70	6	**028210**
50	40		18	24	70	6	**028211** ●
50	45		18	24	70	6	**028209**
60	30		18	24	80	6	**028212**
60	40		18	24	80	6	**028214** ●
60	50		18	24	80	6	**028216**

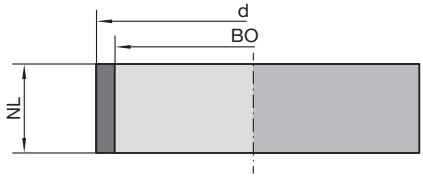

Reducing sleeve TB 100 0 01 without flange

Without flange
TB 100 0 01

d mm	BO mm	NL mm	ID
35	30	10	**028290** ●
35	30	40	**028293** ●
35	30	60	**028294**
35	30	96	**028295**
40	30	20	**028296** ●
40	30	40	**028298** ●
40	30	53	**028300**
40	30	60	**028301**
40	30	96	**028302** ●
40	35	30	**028304**
40	35	40	**028305**
40	35	60	**028306**
40	35	96	**028307**
50	40	96	**028310** ●

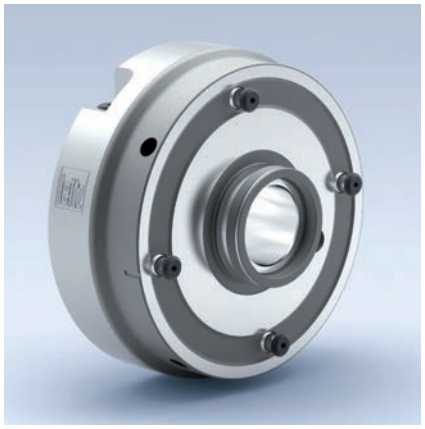









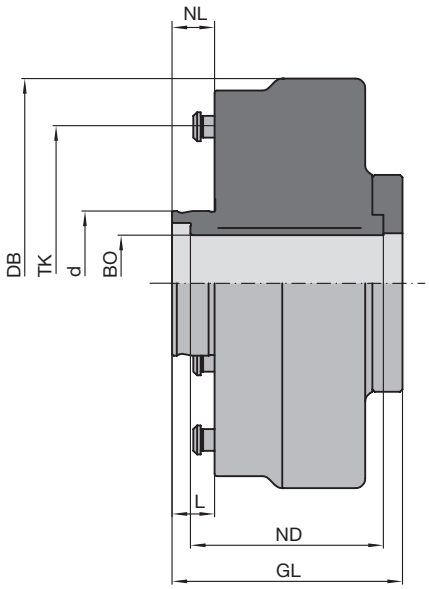

Hydro quick clamping sleeve
type 160 HF

Spindle with safety device against twisting - hexagon HF spindle 40 Quick clamping sleeve type 160 Hydro

Application:
Quick clamping sleeve for tools and hoggers on high precision spindle D = 40 mm with hexagon safety device against twisting.

Machine:
Double-end tenoners, edgebanding machines etc.

Technical information:
Hardened steel tool body, with mechanical quick clamping mechanism without compressed air. Tool is mounted directly on the quick clamping system without intermediate flange, closed hydro clamping system with maintenance free pressure piston mechanism, suitable for right hand and left hand rotation.
RPM n_{max} = 9000 min^{-1}. Tools must have four bayonet holes on 130 mm pitch.
Attention: Comply with maximum admissible speed for the mounted tools!

For tools and hoggers
PH 110 0 01

d mm	BO mm	NL mm	L mm	GL mm	ND mm	DB mm	TK mm	Clamping bolts PCS	ID
60	40	17,7	17,7	95,7	80	170	130	4	**150100** ●

Spare parts:

BEZ	ABM mm	ID
Securing part	for HF-spindle HF 40	**066473** ●
Hexagon key	SW 6	**117516** ●

Spindle securing part consists of:
Conical spring washer, clamping screw, hexagon spanner, brace.

● available ex stock
□ available at short notice
Instruction manual visit www.leitz.org











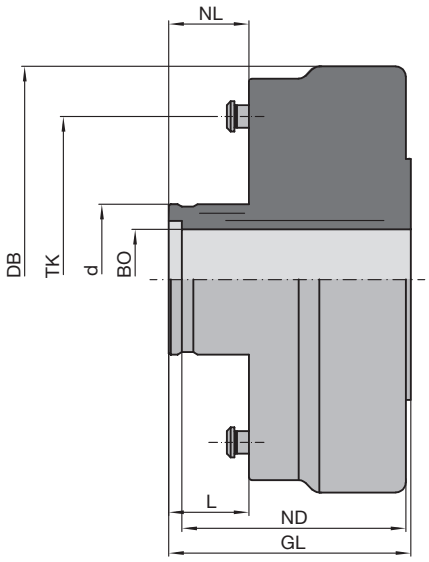

Hydro-Duo quick clamping sleeve
type 160 HF

Spindle with safety device against twisting - hexagon HF spindle 40 Quick clamping sleeve type 160 Hydro-Duo

Application:
Quick clamping sleeve for tools and hoggers on high precision spindle D = 40 mm with hexagon safety device against twisting. Double acting hydro centering clamping eliminating the tolerance between spindle, clamping element and tool.

Machine:
Double-end tenoners, edgebanding machines etc.

Technical information:
Hardened steel tool body, with mechanical quick clamping mechanism without compressed air. Tool is mounted directly on the quick clamping system without intermediate flange, closed hydro clamping system with maintenance free pressure piston mechanism, suitable for right hand and left hand rotation.
RPM n_{max} = 9000 min^{-1}. Tools must have four bayonet holes on 130 mm pitch.
Attention: Comply with maximum admissible speed for the mounted tools!

For tools and hoggers
PH 110 0 02

d	BO	NL	L	GL	ND	DB	TK	Clamping bolts	ID
mm	mm	mm	mm	mm	mm	mm	mm	PCS	
60	40	32	32	96,5	80	170	130	4	**150200** ●

Spare parts:

BEZ	ABM mm	ID
Securing part	for HF-spindle HF 40	**066473** ●
Hexagon key	SW 6	**117516** ●

Spindle securing part consists of:
Conical spring washer, clamping screw, hexagon spanner, brace.

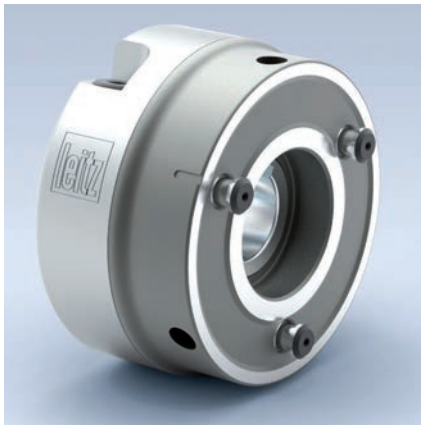





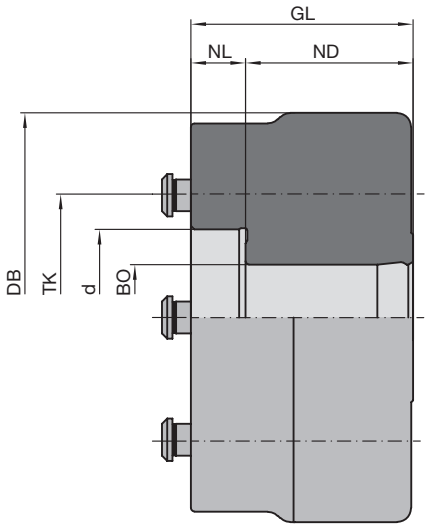

Quick clamping sleeve

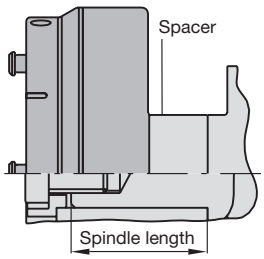

Quick clamping sleeve, flush mounted on spindle

Spindle with safety device against twisting - keyway
Quick clamping sleeve type 110

Application:
For quick clamping of scoring sawblades, grooving sawblades and tools.

Machine:
Double-end tenoners, finger joint machines, edgebanding machines etc.

Technical information:
For standard spindle (DKN), hardened steel tool body with mechanical operation of the quick clamping mechanism without compressed air. Tool is mounted directly or by using a flange, suitable for right hand rotation and left hand rotation.

For scoring sawblades and tools
PM 110 0 01

d mm	BO mm	NL mm	L mm	GL mm	ND mm	DB mm	TK mm	Clamping bolts PCS	ID
50	30 DKN	15,5	15,5	72	47,5	116	80	3	**150000** ●

Spare parts:

BEZ	Machine	ID LH	ID RH
Securing part	IMA	**066477** ●	**066477** ●
Securing part	Homag	**066541** ●	**066540** ●
Hexagon key			**117516** ●

Spindle securing part consists of:
Conical spring washer, clamping nut or clamping screw, spanner or hexagon spanner, brace.

Application:
Spacer for flush mounting when using flanges type 110/2.

Spacer for flush mounting
TR 111 0

Machine	ABM mm	ABM-spindle mm	ID
Homag, IMA	60x26x30,DKN	30 DKN x68	**028800**

● available ex stock
□ available at short notice
Instruction manual visit www.leitz.org

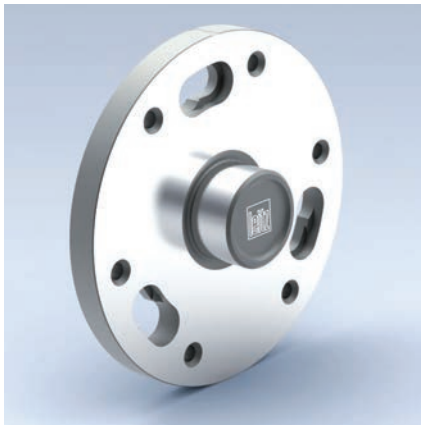





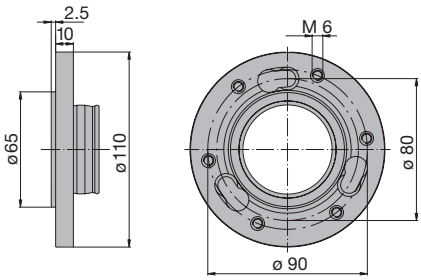

Tool flange type 110/2 for scoring saws

Spindle with safety device against twisting - keyway tool flange type 110

Application:
Tool flange for quick clamping sleeve type 110. Hardened steel tool body for quick clamping of scoring/grooving sawblades.

Machine:
Double-end tenoners, finger joint machines, edgebanding machines etc.

Technical information:
Tool mounted directly on tool flange. RPM n_{max} 12000 min^{-1}.
Attention: Comply with maximum admissible speed for the mounted tools!

Tool flange
TD 883 0 01

Tool Type	ID LH	ID RH
110/2 for scoring saws mounted on flange	**159051**	**159052**







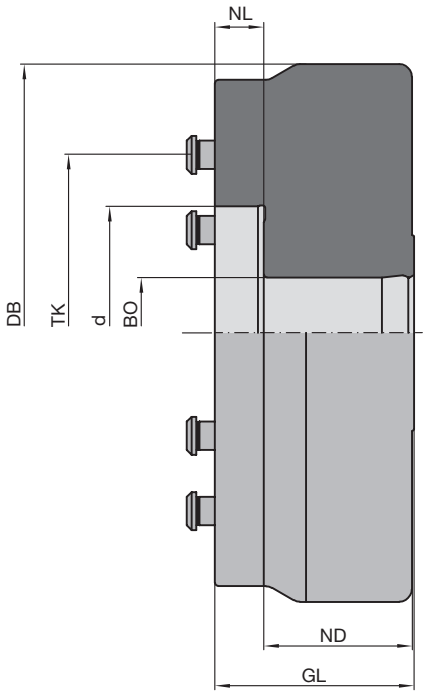

Quick clamping sleeve

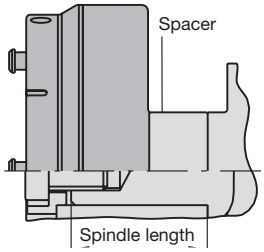

Quick clamping sleeve, flush mounted on spindle

Spindle with safety device against twisting - keyway
Quick clamping sleeve type 160

Application:
For quick clamping of hoggers and tools.

Machine:
Double-end tenoners, edgebanding machines etc.

Technical information:
For standard spindle (KN/DKN). Hardened steel tool body, with mechanical operation of the quick clamping mechanism without compressed air. Tool is mounted directly on the quick clamping sleeve or by a flange, suitable for right hand rotation and left hand rotation. RPM n_{max} 9000 min^{-1}.
Attention: Comply with maximum admissible speed for the mounted tools!

For tools and hoggers
PM 110 0 01

d mm	BO mm	NL mm	L mm	GL mm	ND mm	DB mm	TK mm	Clamping bolts PCS	ID
80	35 DKN	15,5	15,5	72	47,5	170	130	4	**150001** ●
80	40 DKN	15,5	15,5	72	47,5	170	130	4	**150008** ●

Spare parts:

Machine	BEZ	ID LH	ID RH
Homag	Securing part	**066460** ●	**066461** ●
IMA	Securing part	**066556** ●	**066556** ●
	Hexagon key		**117516** ●

Spindle securing part consists of:
Conical spring washer, clamping nut or clamping screw, spanner or hexagon spanner, brace.

Application:
Spacer for flush mounting when using cutter flange type 160/2, type 160/3.

Spacer / set for flush mounting
AT 100 0

Machine	Type	ABM mm	ABM-spindle mm	ID
IMA	160/2 - 3	60x15/20x35,DKN	35 DKNx93	**028803** ●
Homag	160/2 - 3	60x10/20x35,DKN	35 DKNx70	**028804** ●

● available ex stock
□ available at short notice
Instruction manual visit www.leitz.org

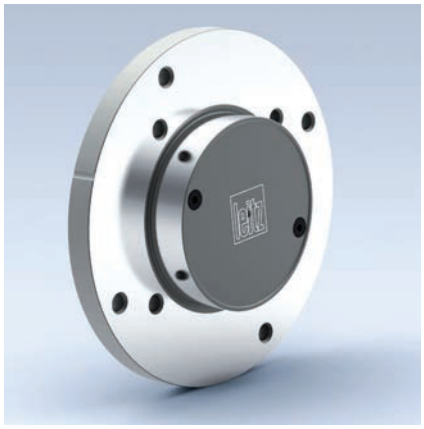





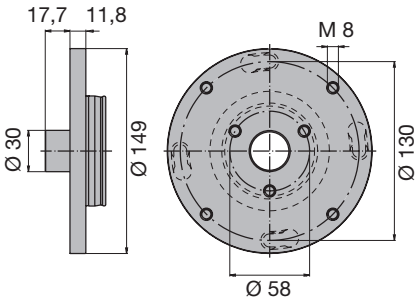

Tool flange type 160/1, for tools

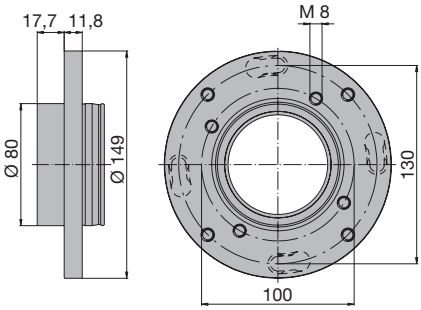

Tool flange type 160/2, for hoggers

Spindle with safety device against twisting - keyway tool flange type 160

Application:
Tool flange for quick clamping sleeve type 160. Hardened steel tool body for quick clamping of tools and hoggers.

Machine:
Double-end tenoners, finger joint machines, edgebanding machines etc.

Technical information:
Tool mounted directly on the flange. RPM n_{max} 9000 min^{-1}.
Attention: Comply with maximum admissible speed for the mounted tools!

Tool flange
TD 882 0 01, TD 883 0 01

Tool Type	ID LH	ID RH
160/1 for cutting tools BO 30 mm/NL 17.7	**159059**	**159060**
160/2 for hoggers BO 80 mm/NL 17.7	**159063**	**159064**

7.3 Clamping chucks
7.3.1 Shrink-fit chucks

Application

Clamping of shank tools with high precision and stability.

Machine

Stationary routers with/without CNC control and cutter spindles for automatic tool change.
Milling machines with cutter spindles for automatic tool change.

Technical features

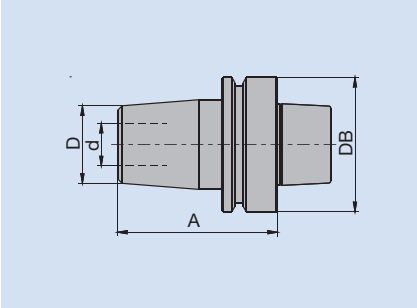

Shrink-fit chuck with hollow taper shank.

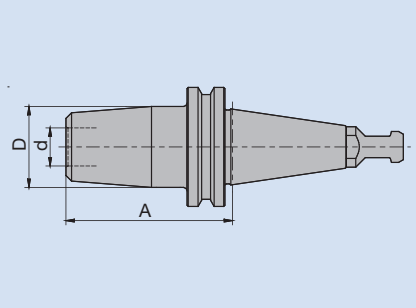

Shrink-fit chuck with steep taper.

D	Largest diameter of the chuck in the clamping area
d	Clamping or bore diameter
DB	Outer diameter of groove
A	Length from reference point on steep taper or HSK reference surface

Permissible shank tolerances

Tools clamped in shrink-fit chucks must have at least the following tool shank tolerances:

	Diameter of shank	
Tools mounted in	< 12 mm	≥ 12 mm
Shrink-fit chucks	ISO h6	ISO g6

Application data

Maximum RPM
The maximum RPM for shrink-fit chucks: n_{max} = 36000 min^{-1}.

Operation

Shrink-fit chucks have a bore smaller than the diameter of the shank to be clamped. The chuck is opened by heating the chuck in the clamping area. The HF generator, enables quick and secure expansion of the shrink-fit chucks by induction heating allowing.
The tool can be fitted / replaced. After the chuck has cooled down the tool is ready for use.
After short, quick heating the tool can be removed or fitted. After the chuck has cooled down the tool can be used.



Leitz High Frequency Generator ISG3400.



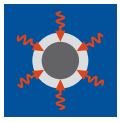

Comparison of transferable torque of traditional clamping chucks

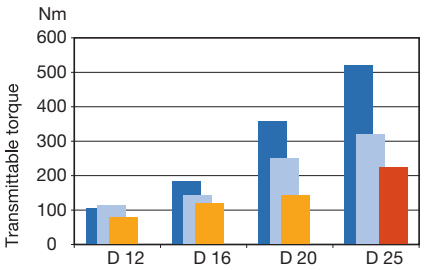

- ThermoGrip® shrink-fit chuck
- Collet DIN ISO 10897-B25, 75 Nm Tightening torque
- Collet DIN ISO 15488-B32 (ER32), 75 Nm Tightening torque
- Hydro clamping chuck

The clamping range of collet chucks and hydro clamping chucks includes shank tolerances g7 and h6. Leitz ThermoGrip® chucks are designed for a shank tolerance h6 for clamping diameters d < 12 mm and a shank tolerance g6 for clamping diameters d ≥ 12 mm.

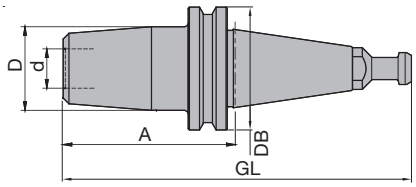

Shrink-fit chuck ThermoGrip® Tapered

Application:
High precision tool chuck for clamping shank tools by thermal shrinking. Has the highest stability and rigidity of all known shank tools clamping systems, suitable for HSC and HPC machining.

Technical information:
Tool chuck for high performance. Precision-balanced for speeds up to 36000 min^{-1}. Short, slim design for improved chip flow extraction. For clamping tungsten carbide and steel shanks. Clamping eccentricity e ≤ 0.01 mm. Integrated length adjustment to adopt the clamping depth of the tool.

SK 30, DIN ISO 7388
PT 301 0

Type	d mm	D mm	DB mm	A mm	GL mm	Weight kg	Length adj. mm	STO	ID
A	12	34	50	70	141,8	0,7	7	g6	**670200** □
A	16	34	50	70	141,8	0,7	7	g6	**670201** □
A	20	42	50	70	141,8	0,8	7	g6	**670202** □
A	25	42	50	80	151,8	1,0	7	g6	**670210** □
B	12	34	50	70	141,8	0,7	7	g6	**670203** □
B	16	34	50	70	141,8	0,7	7	g6	**670204** □
B	20	42	50	70	141,8	0,8	7	g6	**670205** □
B	25	42	50	80	151,8	1,0	7	g6	**670211** □

SK 40, DIN ISO 7388
PT 301 0

Type	d mm	D mm	DB mm	A mm	GL mm	Weight kg	Length adj. mm	STO	ID
E	12	34	63,5	70	164,4	1,1	7	g6	**670206** □
E	16	34	63,5	70	164,4	1,1	7	g6	**670207** □
E	20	42	63,5	70	164,4	1,2	7	g6	**670208** □
E	25	42	63,5	80	174,4	1,2	7	g6	**670209** □

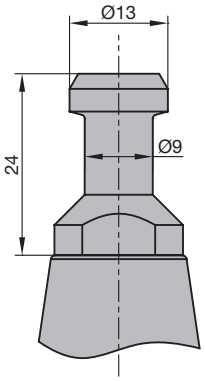

Type: A
SK 30 pull stud as per DIN ISO 7388

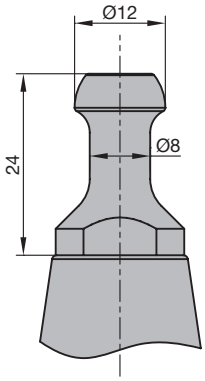

Type: B
SK 30/ISO 30 pull stud for HSD spindles from construction year 9/92 on

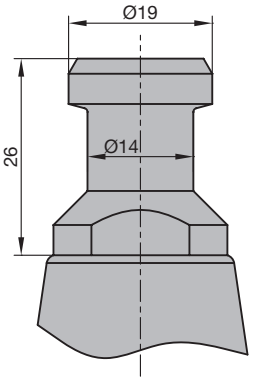

Type: E
SK 40 pull stud as per DIN ISO 7388



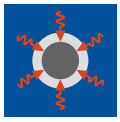

Comparison of transferable torque of traditional clamping chucks

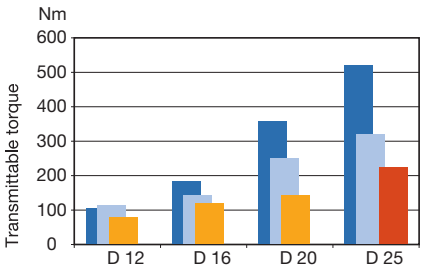

- ThermoGrip® shrink-fit chuck
- Collet DIN ISO 10897-B25, 75 Nm Tightening torque
- Collet DIN ISO 15488-B32 (ER32), 75 Nm Tightening torque
- Hydro clamping chuck

The clamping range of collet chucks and hydro clamping chucks includes shank tolerances g7 and h6. Leitz ThermoGrip® chucks are designed for a shank tolerance h6 for clamping diameters d < 12 mm and a shank tolerance g6 for clamping diameters d ≥ 12 mm.

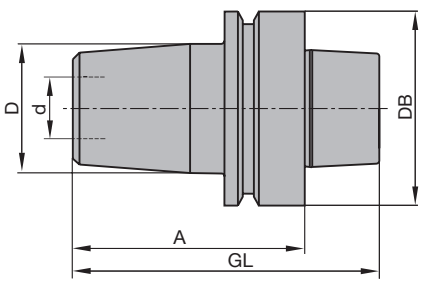

Shrink-fit chuck ThermoGrip® with hollow taper shank

Application:
High precision tool chuck for clamping shank tools by thermal shrinking. Has the highest stability and rigidity of all known shank tools clamping systems, suitable for HSC and HPC machining.

Technical information:
Tool chuck for high performance. Precision-balanced for speeds up to 36000 min^{-1}. Short, slim design for improved chip flow extraction. For clamping tungsten carbide and steel shanks. Clamping eccentricity e ≤ 0.01 mm.

HSK-E 63, DIN 69893
PT 300 0

d mm	D mm	DB mm	A mm	GL mm	Weight kg	STO	ID without chip
8	27	63	75	107	0,9	h6	**670002** ●
9,53	34	63	75	107	0,9	h6	**670023** ●
10	32	63	75	107	0,9	h6	**670003** ●
12	34	63	75	107	0,9	g6	**670004** ●
12,7	34	63	75	107	0,9	h6	**670024** ●
14	34	63	75	107	0,9	g6	**670005** ●
16	34	63	75	107	0,9	g6	**670006** ●
18	42	63	75	107	1,0	g6	**670007** ●
20	42	63	75	107	1,0	g6	**670008** ●
25	42	63	75	107	1,0	g6	**670009** ●
32	53	63	90	122	1,2	g6	**670016** ●

HSK-F 63, DIN 69893
PT 300 0

d mm	d in	D mm	DB mm	A mm	GL mm	Weight kg	STO	ID With chip	ID Without chip
6		27	63	75	100	0,8	h6	**037753** □	**037713** ●
8		27	63	75	100	0,8	h6	**037754** □	**037714** ●
9,53	3/8“	32	63	75	100	0,9	h6	**670013** □	**670010** ●
10		32	63	75	100	0,9	h6		**037715** ●
10		32	63	120	145	1,0	h6		**670017** ●
12		34	63	75	100	0,9	g6	**037752** □	**037712** ●
12		34	63	90	115	1,0	g6		**670018** ●
12		34	63	120	145	1,1	g6		**670019** ●
12,7	1/2“	34	63	75	100	0,9	h6	**670014** □	**670011** ●
14		34	63	75	100	0,9	g6	**037756** □	**037716** ●
16		34	63	75	100	0,9	g6	**037719** □	**037709** ●
16		34	63	95	120	1,0	g6		**670020** ●
16		34	63	120	145	1,0	g6		**670021** ●
18		42	63	75	100	1,0	g6	**037757** □	**037718** ●
19,05	3/4“	42	63	75	100	0,9	h6	**670015** □	**670012** ●
20		42	63	75	100	1,0	g6	**037750** □	**037710** ●
20		42	63	100	125	1,2	g6		**670022** ●
25		42	63	75	100	0,9	g6	**037751** □	**037711** ●
32		53	63	90	115	1,2	g6	**670001** □	**670000** ●

Note:
Chucks with chip already have a data chip (511 bytes) ID **081309** ex works. Chips with larger capacity are available on request.

● available ex stock
□ available at short notice
Instruction manual visit www.leitz.org



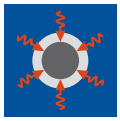



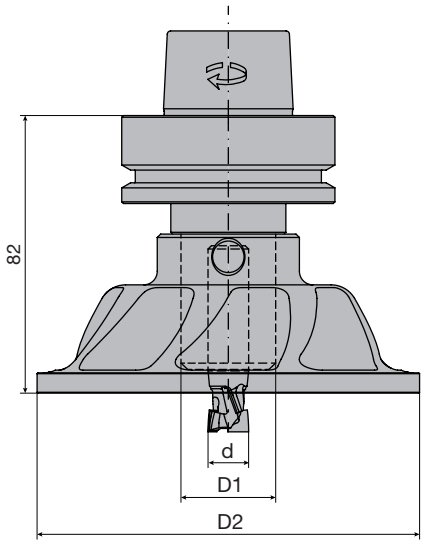

Shrink-fit chuck ThermoGrip® with DFC® Turbine and router cutter

Flow speed depending on the distance to the workpiece

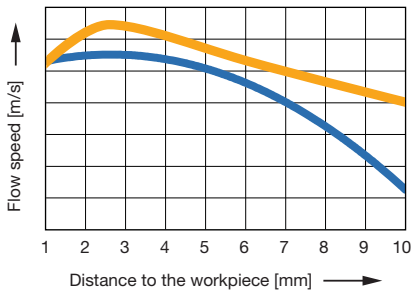

Standard turbine
Leitz DFC® Turbine

Shrink-fit chuck ThermoGrip® with DFC® Turbine

Application:
High-precision tool holder ThermoGrip® HSK-F 63 and DFC® Turbine to increase chip collection especially on nesting machines.

Technical information:
Processing of several panel thicknesses (e.g. 16, 19 and 22 mm) with only one tool setting through constant flow speed and variable distance to the panel (up to 6 mm).

Shrink-fit chuck ThermoGrip® for DFC® Turbine HSK-F 63
PT 300 0

d mm	D1 mm	DB mm	A mm	GL mm	Weight kg	STO	ID without chip
12	28	63	75	100	0,9	g6	**037764** ●
16	28	63	75	100	0,9	g6	**037767** ●
20	36	63	75	100	1,0	g6	**037769**
25	36	63	75	100	0,9	g6	**037770**

DFC® Turbine for shrink-fit chuck ThermoGrip® HSK-F 63
TZ 999 0

for d mm	D1 mm	D2 mm	A mm	Weight kg	ID
12, 16	28	113	47	0,2	**119908** ●
20, 25	36	113	47	0,2	**119909**

Standard values:
Distance turbine to the panel 2-6 mm
Cutting depth below board 0,1 - 0,5 mm

Examples of feed rates:
v_f max. Z 2+2 = 20 m min^{-1}
v_f max. Z 3+3 = 22 m min^{-1}
(v_f max. accessible using n max.)

RPM:
n max. = 24000 min^{-1}

Spare parts:

Part-no.	BEZ	ABM mm	ID
1	Countersink screw, Torx® 20	M6x12	**006084** ●
	TorqueVario-STplus 5-14 Nm	T 15/20/25, SW 4/5/6/8	**009103** ●

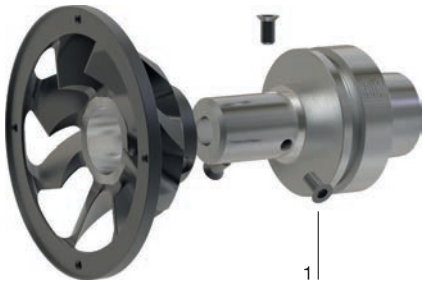



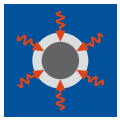

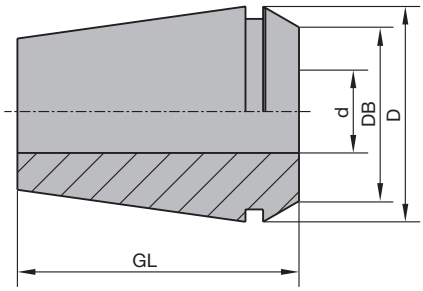

Shrink-fit collet TER, TB 120 0 01

Note:
Corresponding accessories for shrink-fit units are required in order to use shrink-fit collets TER - ER together with the shrink-fit units ISG 22xx / 32xx or 24xx / 34xx.
See: Brochure ThermoGrip® shrink-fit generator.

Shrink collet ThermoGrip®, Type TER, DIN ISO 15488

Application:
High precision tool chuck for clamping shank tools by thermal shrinking. Has the highest stability and rigidity of all known shank tools clamping systems, suitable for HSC and HPC machining.

Technical information:
Replacement for conventional spring collets to increase concentricity, rigidity and speed strength. Universal design for the adaptation of shank tools in machining aggregates as well as direct clamping in spindles with integrated collet adaptor.
For clamping of carbide and steel shanks. Clamping eccentricity e ≤ 0.01 mm.
Attention: In order to mount the collet nut in the shrinked tool, the tool diameter is not allowed to be larger than the collar diameter (DB) stated in the table. In individual cases the existing clamping nut must be exchanged with the version stated in the table.

TER - ER16, DIN ISO 15488, 8°
TB 120 0 01

BEZ	d mm	D mm	DB mm	GL mm	ID
Shrink collet	3	17	12	27	**679500** □
Shrink collet	4	17	12	27	**679501** □
Shrink collet	6	17	12	27	**679502** □
Shrink collet	8	17	12	27	**679503** □

Spare parts:

BEZ	ABM mm	D mm	ID
Collet chuck nut	M22x1.5	28	**006657** □

TER - ER20, DIN ISO 15488, 8°
TB 120 0 01

BEZ	d mm	D mm	DB mm	GL mm	ID
Shrink collet	6	21	15,5	31	**679504** □
Shrink collet	8	21	15,5	31	**679505** □
Shrink collet	10	21	15,5	31	**679506** □

Spare parts:

BEZ	ABM mm	D mm	ID
Collet chuck nut	M25x1,5	34	**006658** □

TER - ER25, DIN ISO 15488, 8°
TB 120 0 01

BEZ	d mm	D mm	DB mm	GL mm	ID
Shrink collet	3	26	20,5	35	**679507** □
Shrink collet	4	26	20,5	35	**679508** □
Shrink collet	6	26	20,5	35	**679509** □
Shrink collet	8	26	20,5	35	**679510** □
Shrink collet	10	26	20,5	35	**679511** □
Shrink collet	12	26	20,5	35	**679512** □
Shrink collet	14	26	20,5	35	**679513** □
Shrink collet	16	26	20,5	35	**679514** □

Spare parts:

BEZ	ABM mm	D mm	ID
Collet chuck nut	M32x1,5	42	**006659** □

● available ex stock
□ available at short notice
Instruction manual visit www.leitz.org

TER - ER32, DIN ISO 15488, 8°
TB 120 0 01

BEZ	d mm	D mm	DB mm	GL mm	ID
Shrink collet	6	33	26,5	40	**679515** □
Shrink collet	8	33	26,5	40	**679516** □
Shrink collet	10	33	26,5	40	**679517** □
Shrink collet	12	33	26,5	40	**679518** □
Shrink collet	14	33	26,5	40	**679519** □
Shrink collet	16	33	26,5	40	**679520** □
Shrink collet	18	33	26,5	40	**679521** □
Shrink collet	20	33	26,5	40	**679522** □

Spare parts:

BEZ	ABM mm	D mm	ID
Collet chuck nut	M40x1,5	50	**006660** □

Application

High precision clamping of shank tools.

Machine

Stationary routers with CNC control and spindles for automatic tool change.
Milling machines with spindles for automatic tool change.

Technical features

Hydro chucks are used to clamp shank tools in spindles with high precision.
Hydro chucks have the same concentric run out tolerance as shrink-fit chucks, but shrink-fit chucks have considerably higher stability.
Shrink-fit chucks are recommended for high cutting forces machining operations.

Permissible shank tolerances

Tools clamped in hydro chucks must have the following tool shank tolerances:

	Diameter of shank	
Tools mounted in	< 12 mm	≥ 12 mm
Hydro chucks	ISO h6	ISO g6

Application data

Maximum RPM
Maximum RPM for hydro chucks: n_{max} = 25000 min^{-1}.

Reducing the clamping diameter

The standard clamping diameter for Leitz hydro chucks is 25 mm. Other shank diameters are clamped using reducing sleeves. The use of reducing sleeves significantly decreases the clamping force and the concentric run out tolerance. It is recommended not to reduce the shank diameter except when absolutely necessary.

The following shank diameters can be clamped with reducing sleeves:

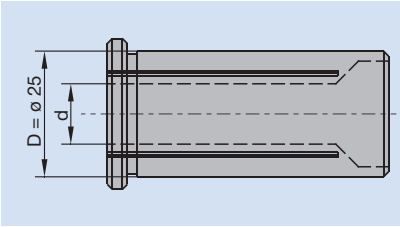

D	25 mm
d	12 mm 14 mm 16 mm 20 mm





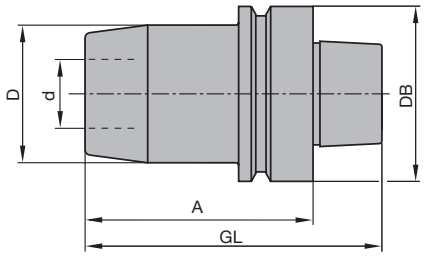

Hydro chuck HSK-F 63

Hydro chucks for shank tools with hollow shank taper HSK-F 63

Application:
High precision tool chuck for hydro clamping shank tools with cylindrical shank and shank diameters up to d_{max} = 25 mm.

Technical information:
Reduction of clamping diameter by special reduction inserts. Independent of direction of rotation, suitable for right hand and left hand rotation tool. Easy handling clamping system. Tool adaptor finely balanced. Maximum admissible speed n_{max} = 25000 min^{-1}.

Clamping diameter 25 mm
PH 350 0

d	D	DB	A	GL	Weight	ID
mm	mm	mm	mm	mm	kg	
25	50	63	85	100	1,1	**039086** ●

Sales unit consisting of chuck and clamping key.

Spare parts:

BEZ	ABM	ID
	mm	
Reducing sleeve	d12/25x56x12	**039081** ●
Reducing sleeve	d14/25x56x14	**039082** ●
Reducing sleeve	d16/25x56x16	**039083** ●
Reducing sleeve	d20/25x56x20	**039084** ●
Allen key	SW 5	**005446** ●

Application

Clamping system for shank tools.

Machine

Stationary routers with/without CNC control, CNC machining centres
Milling machines with spindles to mount shank tools,
Router machines without automatic tool change,
Portable routers.

Technical features

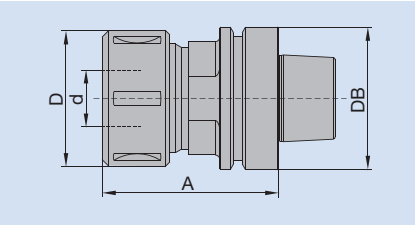

Collet chuck HSK-F 63.

D	Largest diameter of the chuck in the clamping area
d	Tool shank clamping diameter
DB	Diameter of chuck face
A	Length to reference point (SK) or to reference surface (HSK)

Permissible shank tolerances

Tools clamped in collet chucks must have at least the following tool shank tolerances:

	Diameter of shank	
Tools mounted in	< 12 mm	≥ 12 mm
Collet chuck	ISO g7	ISO g7

Collet nut clamping torque

The following torques are required for safe clamping of the tool in the collet chuck:

Collet nut thread	Spanner type	Clamping torque
M 30 x 1,5	SW 40/42	60 Nm
M 33 x 1,5	SW 40/42	60 Nm
M 40 x 1,5	SW 45/50	80 Nm
M 48 x 2	SW 58/62	100 Nm
M 50 x 1,5	SW 58/62	100 Nm

Application data

Maximum RPM
The maximum RPM for collet chucks:
n_{max} = 24000 min^{-1} (shank diameters up to 25 mm).
HSC Collet chucks (High Speed Cutting) have a maximum RPM: n_{max} = 30000 min^{-1}.

Collet chuck design

Leitz collet chucks are available for the two designs of collet below.

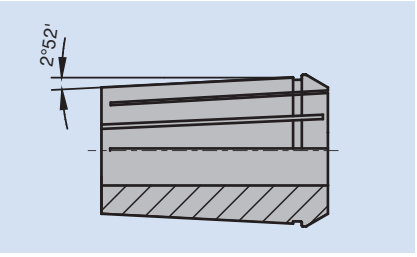

Collet taper angle 2°52': DIN ISO 10897.

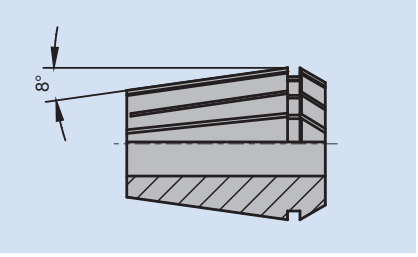

Collet taper angle 8°: DIN ISO 15488.

Collets with a taper angle of 2°52', taper tolerance 1:10, DIN ISO 10897 are recommended.



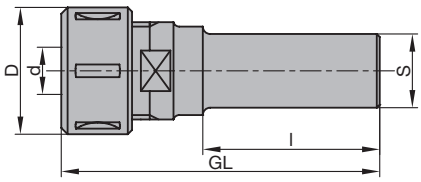

Collet chuck with cylindrical shank

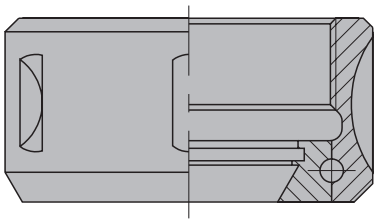

Ball bearing collet nut

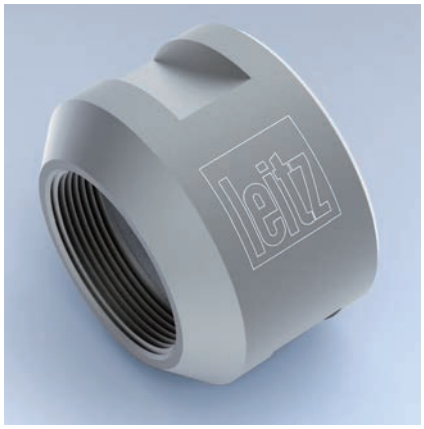

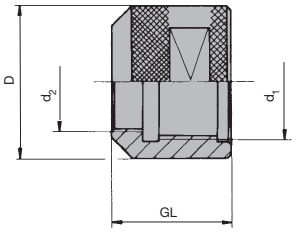

Fixing nut TK 510 0
d_1 = machine related
d_2 = tool related

Precision collet chuck, cylindrical shank

Application:
Precision tool chuck with collet for clamping shank tools with cylindrical shank and shank diameters up to d_{max} = 16 mm.

Technical information:
Exact concentricity through hardened, ground and double slotted collets. Easy handling as loosening the ball bearing collet nut automatically opens the collet. Suitable for right and left hand rotation because of ball bearing collet nut. Ball bearing collet nut for increased clamping forces and improved concentricity compared to monobloc design.

Model with ball bearing collet nut
PM 350 0 03

d mm	D mm	A mm	GL mm	S mm	Weight kg	Type	ID
6 - 12,7	35		77	25x50	0,6	1	**671001** ●
6 - 16	43	55	115	MK II / M30	0,8	2	**037493** ●
6 - 16	43		108	25x60	0,8	2	**037494** ●

Sales unit consists of clamping chuck, collet nut and key, without collet.

Spare parts:

BEZ	ABM mm	for S mm	ID 1	ID 2
Collet (2°52')		6	**679013** ●	**679005** ●
Collet (2°52')		7	**679015** ●	
Collet (2°52')		8	**679016** ●	**679032** ●
Collet (2°52')		9		**679033** ●
Collet (2°52')		9,5		**679034** ●
Collet (2°52')		10	**679019** ●	**679006** ●
Collet (2°52')		12	**679020** ●	**679036** ●
Collet (2°52')		13		**679007** ●
Collet (2°52')		14		**679037** ●
Collet (2°52')		16		**679008** ●
Collet (2°52')		6,35 (1/4")	**679014** ●	**679009** ●
Collet (2°52')		9,53 (3/8")	**679018** ●	
Collet (2°52')		12,7 (1/2")	**679021** ●	**679011** ●
Sickle spanner	34/36		**005498** ●	
Sickle spanner	40/42			**005469** ●
Collet chuck nut	M27x1.5		**006653** ●	
Collet chuck nut with ball bearing	M33x1.5			**005685** ●

Clamping nut for morse taper II shanks

Application:
For clamping tools or tool chucks with morse taper II shanks (MK II).

Technical information:
d_1 = W 1 1/8" suitable for Perske and Maka motor spindles.
d_1 = M 33 X 3 suitable for Italian routers.

With differential thread
TK 510 0

d_1 mm	d_2 mm	D mm	GL mm	Weight kg	ID RH
W 1 1/8"	M30x1,5	45	30	0,2	**005682** ●
M33x3	M30x1,5	45	35	0,2	**006624** ●

● available ex stock
□ available at short notice
Instruction manual visit www.leitz.org



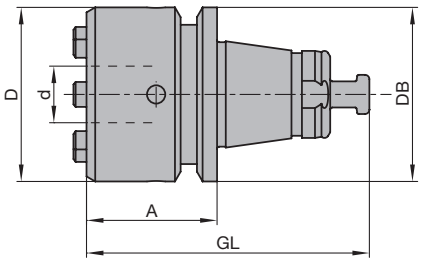

Collet chuck

Collet chuck with steep taper for CNC aggregates

Application:
Precision tool chuck with collet for clamping shank tools with cylindrical shank and shank diameters up to d_{max} = 16 mm (5/8“).

Technical information:
Steep taper design for Flex 5+ aggregates (Homag Group) and 5-motion-Plus aggregate (Felder Format-4). Exact concentric running through hardened, ground and double slotted collets. Easy handling through automatic opening of the collet when opening the collet nut. Tool adaptor and collet nut fine balanced. Maximum tool protrusion of the chuck = 50 mm. A collet with clamping diameter 10 mm is included.

A = 30 mm, diameter range 3-16 mm
PM 350 0

Machine	d mm	D mm	DB mm	A mm	GL mm	Weight kg	ID
Felder Format-4, Homag Group	3 - 16	40	40	30	65	0,3	**672002** ●

Spare parts:

BEZ	ABM mm	for S mm	ID
Collet (8°)		6	**037979** ●
Collet (8°)		8	**037980** ●
Collet (8°)		10	**037981** ●
Collet (8°)		12	**037982** ●
Collet (8°)		14	**037983** ●
Collet (8°)		16	**037984** ●
Collet (8°)		6,35 (1/4“)	**679027** ●
Collet (8°)		9,53 (3/8“)	**679028** ●
Collet (8°)		12,7 (1/2“)	**679029** ●
Collet (8°)		15,88 (5/8“)	**679030** ●
Clamping key	E25AX		**117519** ●
Collet chuck nut	ERAX25		**116501** □

● available ex stock
□ available at short notice
Instruction manual visit www.leitz.org



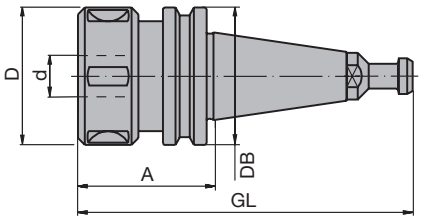

Collet chuck with steep taper

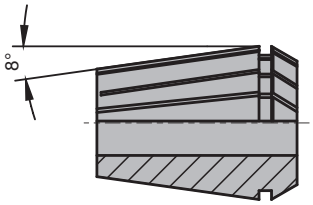

Collet angle 8°: DIN ISO 15488

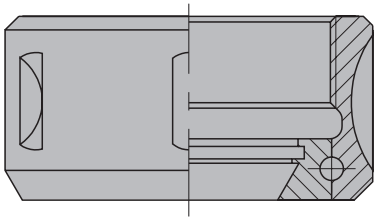

Ball bearing collet nut

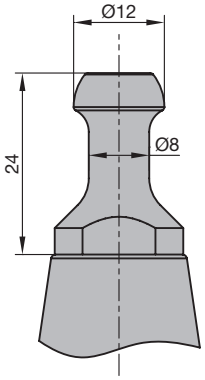

Type: B
SK 30/ISO 30 pull stud for HSD spindles from construction year 9/92 on

Collet chuck with steep taper SK 30

Application:
Precision tool chuck with collet for clamping shank tools with cylindrical shank and shank diameters up to d_{max} = 20 mm.

Technical information:
Steep taper design as per DIN ISO 7388, without grooves and notches. Exact concentric running through hardened, ground and double slotted collets. Vibration free cutting by short design. Easy handling through automatic opening of the collet when loosening the collet nut. Suitable for right hand and left hand rotation due to ball bearing collet nut. Ball bearing collet nut for increased clamping forces and improved concentricity compared to monobloc design. Tool chuck and collet nut fine balanced. Suitable mounting device VN 799 0 see section Knives and Spare Parts.

SK 30, A = 50 / 63 mm, diameter range 6-20 mm, 8° taper angle of the collet
PM 350 0 04

Type	d mm	D mm	DB mm	A mm	GL mm	Weight kg	ID
B	6 - 20	50	50	50	121,8	0,6	**037904** ●
B	6 - 20	50	50	63	134,8	0,7	**672001** ●

Sales unit consisting of clamping chuck with ball bearing collet nut, without collet or spanner.

Spare parts:

BEZ	ABM mm	for S mm	ID
Collet (8°)		6	**037439** ●
Collet (8°)		8	**037440** ●
Collet (8°)		10	**037441** ●
Collet (8°)		12	**037442** ●
Collet (8°)		13	**037443** ●
Collet (8°)		14	**037444** ●
Collet (8°)		16	**037445** ●
Collet (8°)		18	**037446** ●
Collet (8°)		20	**037447** ●
Collet (8°)		6,35 (1/4“)	**037509** ●
Collet (8°)		9,53 (3/8“)	**037510** ●
Collet (8°)		12,7 (1/2“)	**037511** ●
Collet (8°)		15,88 (5/8“)	**037507** ●
Collet (8°)		19,05 (3/4“)	**037506** ●
Sickle spanner	45/50		**005491** ●
Collet chuck nut with ball bearing	M40x1.5		**005718** ●



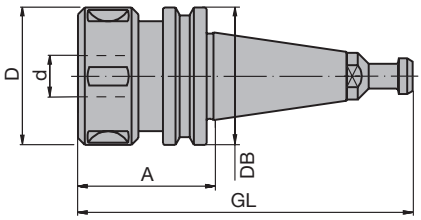

Collet chuck with steep taper

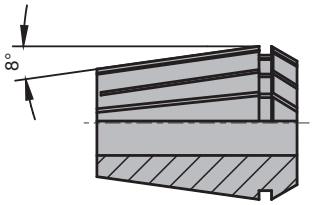

Collet angle 8°: DIN ISO 15488

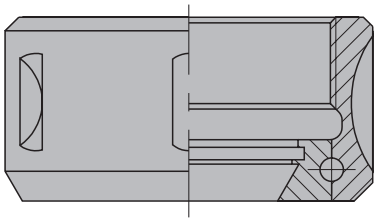

Ball bearing collet nut

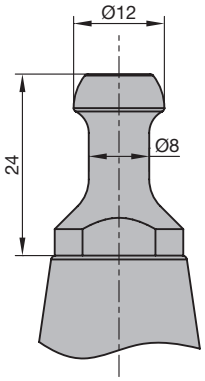

Type: B
SK 30/ISO 30 pull stud for HSD spindles from construction year 9/92 on

Collet chuck with steep taper SK 30

Application:
Precision tool chuck with collet for clamping shank tools with cylindrical shank and shank diameters up to d_{max} = 30 mm.

Technical information:
Steep taper design as per DIN ISO 7388, without grooves and notches. Exact concentric running through hardened, ground and double slotted collets. Easy handling as loosening the ball bearing collet nut automatically opens the collet. Suitable for right hand and left hand rotation because of ball bearing collet nut. Ball bearing collet nut for increased clamping forces and improved concentricity compared to monobloc design. Tool chuck and collet nut fine balanced. Suitable mounting device VN 799 0 see section Knives and Spare Parts.

SK 30, A = 61 mm, 8° taper angle of collet, diameter range 6-30 mm
PM 350 0 16

Type	d mm	D mm	DB mm	A mm	GL mm	Weight kg	ID
B	6 - 30	63	50	61	108,8	0,9	**037968** ●

Sales unit consisting of clamping chuck with ball bearing collet nut, without collet or spanner.

Spare parts:

BEZ	ABM mm	for S mm	ID
Collet (8°)		6	**037926** ●
Collet (8°)		8	**037927** ●
Collet (8°)		10	**037928** ●
Collet (8°)		12	**037929** ●
Collet (8°)		14	**037930** ●
Collet (8°)		16	**037931** ●
Collet (8°)		20	**037932** ●
Collet (8°)		25	**037933** ●
Collet (8°)		30	**679039** ●
Collet (8°)		6,35 (1/4“)	**037934** ●
Collet (8°)		9,53 (3/8“)	**037935** ●
Collet (8°)		12,7 (1/2“)	**037936** ●
Collet (8°)		15,88 (5/8“)	**037937** ●
Collet (8°)		19,05 (3/4“)	**037938** ●
Collet (8°)		25,4 (1“)	**037939** ●
Sickle spanner	58/62		**005458** ●
Collet chuck nut with ball bearing	M50x1.5		**006639** ●

● available ex stock
□ available at short notice
Instruction manual visit www.leitz.org



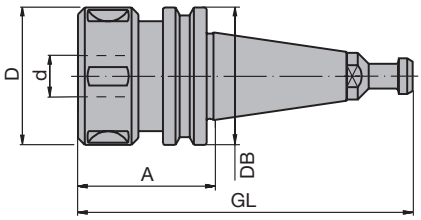

Collet chuck with steep taper

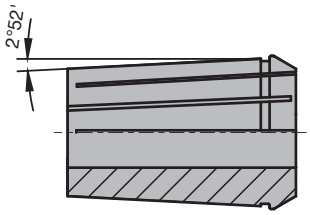

Collet angle 2°52‘: DIN ISO 10897

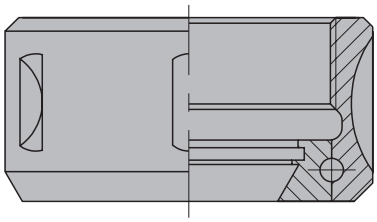

Ball bearing collet nut

Collet chuck with steep taper SK 30 / SK 40

Application:
Precision tool chuck with collet for clamping shank tools with cylindrical shank and shank diameters up to d_{max} = 25.4 mm (1“).

Technical information:
Steep taper design as per DIN ISO 7388, without grooves and notches. Exact concentric running through hardened, ground and double slotted collets. Easy handling as loosening the ball bearing collet nut automatically opens the collet. Suitable for right hand and left hand rotation because of ball bearing collet nut. Ball bearing collet nut for increased clamping forces and improved concentricity compared to monobloc design. Tool chuck and collet nut fine balanced. Suitable mounting device VN 799 0 see section Knives and Spare Parts.

SK 30, A = 70 mm, diameter range 6-25.4 mm
PM 350 0 05

Type	d mm	D mm	DB mm	A mm	GL mm	Weight kg	ID
A	6 - 25,4	60	50	70	141,8	0,9	**037421** ●

SK 40, A = 70 mm, diameter range 6-25.4 mm
PM 350 0 05

Type	d mm	D mm	DB mm	A mm	GL mm	Weight kg	ID
E	6 - 25,4	60	63,55	70	164,6	1,5	**037422** ●

Sales unit consisting of clamping chuck with ball bearing collet nut, without collet or spanner.

Spare parts:

BEZ	ABM mm	for S mm	ID
Collet (2°52‘)		6	**037429** ●
Collet (2°52‘)		8	**037430** ●
Collet (2°52‘)		10	**037431** ●
Collet (2°52‘)		12	**037432** ●
Collet (2°52‘)		13	**037433** ●
Collet (2°52‘)		14	**037434** ●
Collet (2°52‘)		16	**037435** ●
Collet (2°52‘)		18	**037436** ●
Collet (2°52‘)		20	**037437** ●
Collet (2°52‘)		25	**037438** ●
Collet (2°52‘)		6,35 (1/4“)	**037495** ●
Collet (2°52‘)		9,53 (3/8“)	**037505** ●
Collet (2°52‘)		12,7 (1/2“)	**037496** ●
Collet (2°52‘)		15,88 (5/8“)	**037502** ●
Collet (2°52‘)		19,05 (3/4“)	**037497** ●
Collet (2°52‘)		25,4 (1“)	**037508** ●
Sickle spanner	58/62		**005458** ●
Collet chuck nut with ball bearing	M48x2		**005714** ●
Locking nut with Euchner chip	SK 40, 511 Bytes		**081600** ●
Locking nut with Balluff chip	SK 40, 511 Bytes		**081601** ●

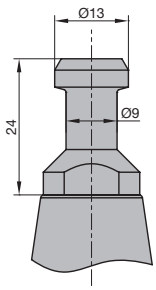

Type: A
SK 30 pull stud as per DIN ISO 7388

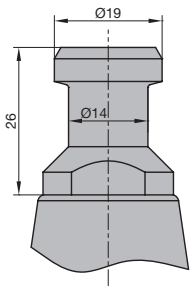

Type: E
SK 40 pull stud as per DIN ISO 7388

● available ex stock
□ available at short notice
Instruction manual visit www.leitz.org



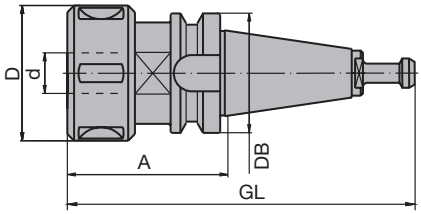

Collet chuck BT 35

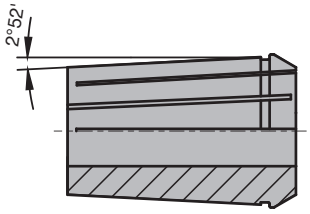

Collet angle 2°52‘: DIN ISO 10897

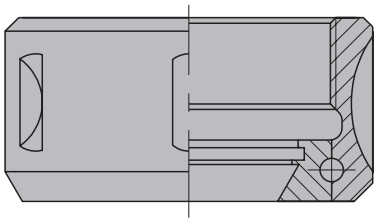

Ball bearing collet nut

Collet chuck with steep taper BT 30 and BT 35

Application:
Precision tool chuck with collet for clamping shank tools with cylindrical shank and shank diameters up to d_{max} = 25.4 mm (1“).

Technical information:
Steep taper design BT 30 or BT 35. Exact concentric running through hardened, ground and double slotted collets. Easy handling as loosening the ball bearing collet nut automatically opens the collet. Suitable for right hand and left hand rotation because of ball bearing collet nut. Ball bearing collet nut for increased clamping forces and improved concentricity compared to monobloc design. Tool chuck and collet nut fine balanced. Suitable mounting device VN 799 0 see section Knives and Spare Parts. (Design for SK 30).

Steep taper BT 30 without grooves and notches
PM 350 0 07

Type	d mm	D mm	DB mm	A mm	GL mm	Weight kg	ID
F	6 - 25,4	60	46	70	141,4	0,9	**037962** ●

Steep taper BT 35 with grooves and notches
PM 350 0 07

Type	d mm	D mm	DB mm	A mm	GL mm	Weight kg	ID
G	6 - 25,4	60	53	70	154,4	1	**037414** ●

Sales unit consisting of clamping chuck with ball bearing collet nut, without collet or spanner.

Spare parts:

BEZ	ABM mm	for S mm	ID
Collet (2°52‘)		6	**037429** ●
Collet (2°52‘)		8	**037430** ●
Collet (2°52‘)		10	**037431** ●
Collet (2°52‘)		12	**037432** ●
Collet (2°52‘)		13	**037433** ●
Collet (2°52‘)		14	**037434** ●
Collet (2°52‘)		16	**037435** ●
Collet (2°52‘)		18	**037436** ●
Collet (2°52‘)		20	**037437** ●
Collet (2°52‘)		25	**037438** ●
Collet (2°52‘)		6,35 (1/4“)	**037495** ●
Collet (2°52‘)		9,53 (3/8“)	**037505** ●
Collet (2°52‘)		12,7 (1/2“)	**037496** ●
Collet (2°52‘)		15,88 (5/8“)	**037502** ●
Collet (2°52‘)		19,05 (3/4“)	**037497** ●
Collet (2°52‘)		25,4 (1“)	**037508** ●
Sickle spanner	58/62		**005458** ●
Collet chuck nut with ball bearing	M48x2		**005714** ●

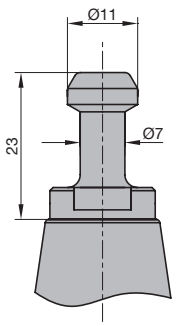

Type: F
BT 30 pull stud
Anderson

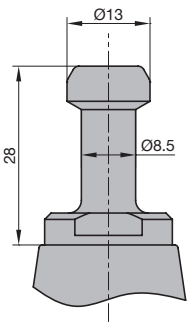

Type: G
BT 35 pull stud
Heian, Shoda

● available ex stock
□ available at short notice
Instruction manual visit www.leitz.org



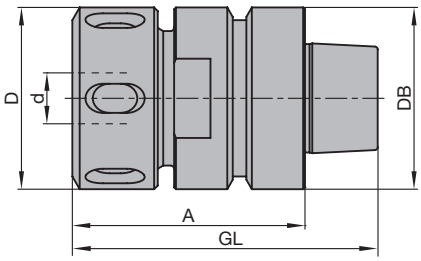

Collet chuck HSK-F 50

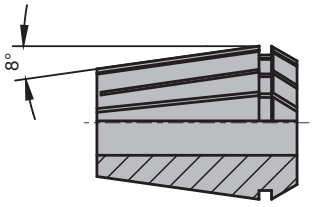

Collet angle 8°: DIN ISO 15488

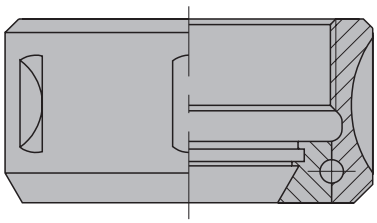

Ball bearing collet nut

Collet chuck with hollow taper shank HSK-F 50

Application:
Precision tool chuck with collet for clamping shank tools with cylindrical shank and shank diameters up to d_{max} = 20 mm.

Technical information:
Hollow taper shank as per DIN 69893. Exact concentric running through hardened, ground and double slotted collets. Easy handling as loosening the ball bearing collet nut automatically opens the collet. Suitable for right hand and left hand rotation because of ball bearing collet nut. Ball bearing collet nut for increased clamping forces and improved concentricity compared to monobloc design. Tool chuck and collet nut fine balanced. Suitable mounting device VN 799 0 see section Knives and Spare Parts.

HSK-F 50, DIN 69893, diameter range up to 20 mm, 8° angle of the collet
PM 350 0 15

d mm	D mm	DB mm	A mm	GL mm	Weight kg	ID
6 - 20	50	50	64	84	0,9	**037999** ●

Sales unit consisting of clamping chuck with ball bearing collet nut, without collet and spanner.

Spare parts:

BEZ	ABM mm	for S mm	ID
Collet (8°)		6	**037439** ●
Collet (8°)		8	**037440** ●
Collet (8°)		10	**037441** ●
Collet (8°)		12	**037442** ●
Collet (8°)		13	**037443** ●
Collet (8°)		14	**037444** ●
Collet (8°)		16	**037445** ●
Collet (8°)		18	**037446** ●
Collet (8°)		20	**037447** ●
Collet (8°)		6,35 (1/4“)	**037509** ●
Collet (8°)		9,53 (3/8“)	**037510** ●
Collet (8°)		12,7 (1/2“)	**037511** ●
Collet (8°)		15,88 (5/8“)	**037507** ●
Collet (8°)		19,05 (3/4“)	**037506** ●
Sickle spanner	45/50		**005491** ●
Collet chuck nut with ball bearing	M40x1.5		**005718** ●



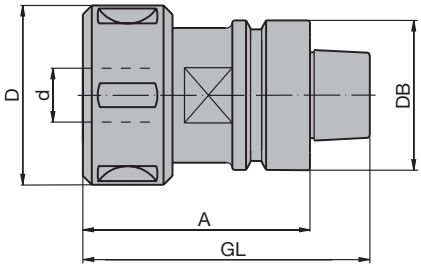

Collet chuck HSK-F 50

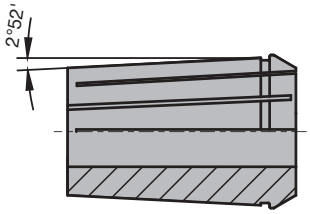

Collet angle 2°52‘: DIN ISO 10897

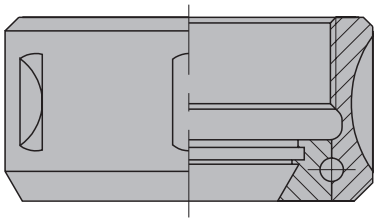

Ball bearing collet nut

Collet chuck with hollow taper shank HSK-F 50

Application:
Precision tool chuck with collet for clamping shank tools with cylindrical shank and shank diameters up to d_{max} = 25.4 mm (1“).

Technical information:
Hollow taper shank as per DIN 69893. Exact concentric running through hardened, ground and double slotted collets. Easy handling as loosening the ball bearing collet nut automatically opens the collet. Suitable for right hand and left hand rotation because of ball bearing collet nut. Ball bearing collet nut for increased clamping forces and improved concentricity compared to monobloc design. Tool chuck and collet nut fine balanced. Suitable mounting device VN 799 0 see section Knives and Spare Parts.

HSK-F 50, DIN 69893, diameter range up to 25.4 mm
PM 350 0 06

d mm	D mm	DB mm	A mm	GL mm	Weight kg	ID
6 - 25,4	60	50	76	96	0,9	**037500** ●

Sales unit consisting of clamping chuck with ball bearing collet nut, without collet or spanner.

Spare parts:

BEZ	ABM mm	for S mm	ID
Collet (2°52‘)		6	**037429** ●
Collet (2°52‘)		8	**037430** ●
Collet (2°52‘)		10	**037431** ●
Collet (2°52‘)		12	**037432** ●
Collet (2°52‘)		13	**037433** ●
Collet (2°52‘)		14	**037434** ●
Collet (2°52‘)		16	**037435** ●
Collet (2°52‘)		18	**037436** ●
Collet (2°52‘)		20	**037437** ●
Collet (2°52‘)		25	**037438** ●
Collet (2°52‘)		6,35 (1/4“)	**037495** ●
Collet (2°52‘)		9,53 (3/8“)	**037505** ●
Collet (2°52‘)		12,7 (1/2“)	**037496** ●
Collet (2°52‘)		15,88 (5/8“)	**037502** ●
Collet (2°52‘)		19,05 (3/4“)	**037497** ●
Collet (2°52‘)		25,4 (1“)	**037508** ●
Sickle spanner	58/62		**005458** ●
Collet chuck nut with ball bearing	M48x2		**005714** ●

● available ex stock
□ available at short notice
Instruction manual visit www.leitz.org



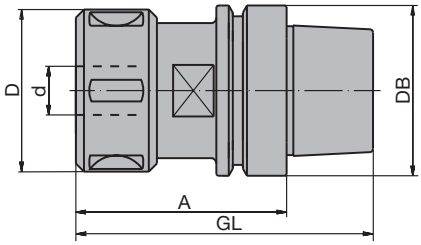

Collet chuck HSK-E 63

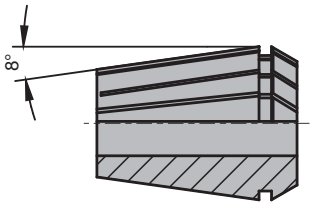

Collet angle 8°: DIN ISO 15488

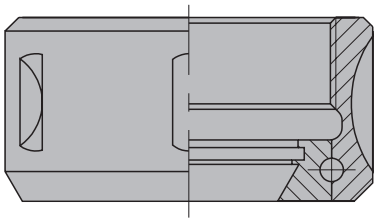

Ball bearing collet nut

Collet chuck with hollow taper shank HSK-E 63

Application:
Precision tool chuck with collet for clamping shank tools with cylindrical shank and shank diameters up to d_{max} = 30 mm.

Technical information:
Hollow taper shank as per DIN 69893. Exact concentric running through hardened, ground and double slotted collets. Vibration free cutting by short design. Easy handling as loosening the ball bearing collet nut automatically opens the collet. Suitable for right hand and left hand rotation because of ball bearing collet nut. Ball bearing collet nut for increased clamping forces and improved concentricity compared to monobloc design. Tool chuck and collet nut fine balanced. Suitable mounting device VN 799 0 see section Knives and Spare Parts.

HSK-E 63, DIN 69893, A = 76 mm, diameter range 6-30 mm, 8° taper angle of the collet
PM 350 0 15

d mm	D mm	DB mm	A mm	GL mm	Weight kg	ID
6 - 30	63	63	76	108,5	1,1	**679040** ●

Sales unit consisting of clamping chuck with ball bearing collet nut, without collet or spanner.

Spare parts:

BEZ	ABM mm	for S mm	ID
Collet (8°)		6	**037926** ●
Collet (8°)		8	**037927** ●
Collet (8°)		10	**037928** ●
Collet (8°)		12	**037929** ●
Collet (8°)		14	**037930** ●
Collet (8°)		16	**037931** ●
Collet (8°)		20	**037932** ●
Collet (8°)		25	**037933** ●
Collet (8°)		30	**679039** ●
Collet (8°)		6,35 (1/4“)	**037934** ●
Collet (8°)		9,53 (3/8“)	**037935** ●
Collet (8°)		12,7 (1/2“)	**037936** ●
Collet (8°)		15,88 (5/8“)	**037937** ●
Collet (8°)		19,05 (3/4“)	**037938** ●
Collet (8°)		25,4 (1“)	**037939** ●
Sickle spanner	58/62		**005458** ●
Collet chuck nut with ball bearing	M50x1.5		**006639** ●
Chip-Balluff	511 Bytes		**081309** ●
Chip-Balluf	2047 Bytes		**081330** □

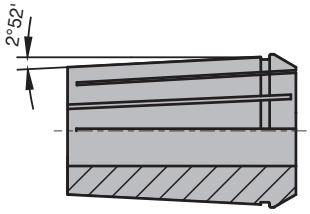

Collet angle 2°52‘: DIN ISO 10897

Application:
Precision tool chuck with collet for clamping shank tools with cylindrical shank and shank diameters up to d_{max} = 25.4 mm (1“).

HSK-E 63, DIN 69893, A = 78 mm, diameter range 6-25.4 mm
PM 350 0 06

d mm	D mm	DB mm	A mm	GL mm	Weight kg	ID
6 - 25,4	60	63	78	110	1,1	**037914** ●

Sales unit consisting of clamping chuck with ball bearing collet nut, without collet or spanner.

Spare parts:

BEZ	ABM mm	for S mm	ID
Collet (2°52‘)		6	**037429** ●
Collet (2°52‘)		8	**037430** ●
Collet (2°52‘)		10	**037431** ●
Collet (2°52‘)		12	**037432** ●
Collet (2°52‘)		13	**037433** ●
Collet (2°52‘)		14	**037434** ●
Collet (2°52‘)		16	**037435** ●
Collet (2°52‘)		18	**037436** ●
Collet (2°52‘)		20	**037437** ●
Collet (2°52‘)		25	**037438** ●
Collet (2°52‘)		6,35 (1/4“)	**037495** ●
Collet (2°52‘)		9,53 (3/8“)	**037505** ●
Collet (2°52‘)		12,7 (1/2“)	**037496** ●
Collet (2°52‘)		15,88 (5/8“)	**037502** ●
Collet (2°52‘)		19,05 (3/4“)	**037497** ●
Collet (2°52‘)		25,4 (1“)	**037508** ●
Sickle spanner	58/62		**005458** ●
Collet chuck nut with ball bearing	M48x2		**005714** ●
Chip-Balluff	511 Bytes		**081309** ●
Chip-Balluf	2047 Bytes		**081330** □

● available ex stock
□ available at short notice
Instruction manual visit www.leitz.org



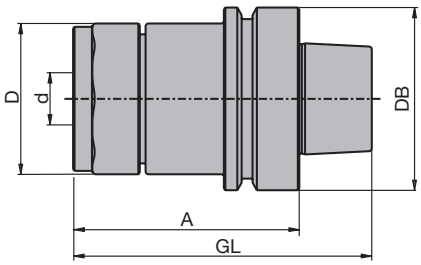

NiRo collet chuck Premium HSK-F 63

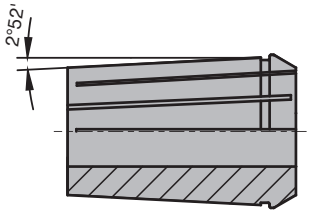

Collet angle 2°52‘: ISO 10897, Form B



Special key especially for NiRo collet chuck Premium



Torque wrench with insert for precise clamping

NiRo Collet chuck *Premium* with hollow taper shank HSK-F 63

Application:
Precision tool chuck especially for use in difficult climatic conditions with collet for clamping shank tools with cylindrical shank and shank diameters up to d_{max} = 25.4 mm (1“).

Technical information:
Long tool life due to the use of corrosion-resistant steel. Hollow taper shank as per DIN 69893. Exact concentric running through hardened, ground and double slotted collets. Easy handling as loosening the ball bearing collet nut automatically opens the collet. Suitable for right hand and left hand rotation because of ball bearing collet nut. Ball bearing collet nut for increased clamping forces and improved concentricity compared to monobloc design. Tool chuck and collet nut fine balanced. Suitable mounting device VN 799 0 see section Knives and Spare Parts. Easy and safe clamping and releasing by clamping key with optimised spanner flats.

HSK-F 63, DIN 69893, A = 78, diameter range 6-25.4 mm
PM 350 0 17

d mm	D mm	DB mm	A mm	GL mm	Weight kg	ID
6 - 25,4	52	63	78	103	1,1	**679043** ●

Sales unit consisting of clamping chuck with ball bearing collet nut, without collet or clamping key.

Spare parts:

BEZ	ABM mm	for S mm	ID
Collet (2°52‘)		6	**037429** ●
Collet (2°52‘)		8	**037430** ●
Collet (2°52‘)		10	**037431** ●
Collet (2°52‘)		12	**037432** ●
Collet (2°52‘)		13	**037433** ●
Collet (2°52‘)		14	**037434** ●
Collet (2°52‘)		16	**037435** ●
Collet (2°52‘)		18	**037436** ●
Collet (2°52‘)		20	**037437** ●
Collet (2°52‘)		25	**037438** ●
Collet (2°52‘)		6,35 (1/4“)	**037495** ●
Collet (2°52‘)		9,53 (3/8“)	**037505** ●
Collet (2°52‘)		12,7 (1/2“)	**037496** ●
Collet (2°52‘)		15,88 (5/8“)	**037502** ●
Collet (2°52‘)		19,05 (3/4“)	**037497** ●
Collet (2°52‘)		25,4 (1“)	**037508** ●
Clamping key			**117540** ●
Torque wrench	9x12, 20-100 Nm		**117541** ●
Insert for torque wrench	9x12		**117542** ●
Collet chuck nut NiRo with ball bearing	TR44x1,5		**006663** ●
Chip-Balluff	511 Bytes		**081309** ●
Chip-Balluf	2047 Bytes		**081330** □



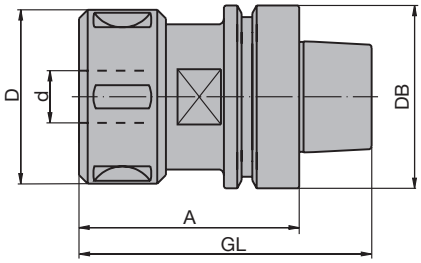

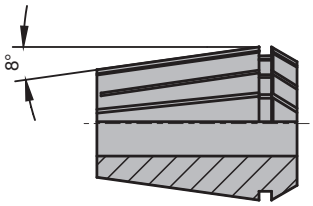

Collet angle 8°: DIN ISO 15488

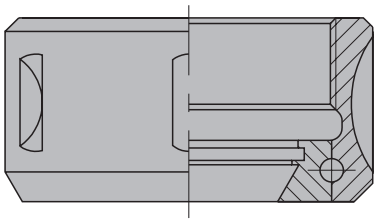

Ball bearing collet nut

Collet chuck with hollow taper shank HSK-F 63

Application:
Precision tool chuck with collet for clamping shank tools with cylindrical shank and shank diameters up to d_{max} = 30 mm.

Technical information:
Hollow taper shank as per DIN 69893. Exact concentric running through hardened, ground and double slotted collets. Easy handling as loosening the ball bearing collet nut automatically opens the collet. Suitable for right hand and left hand rotation because of ball bearing collet nut. Ball bearing collet nut for increased clamping forces and improved concentricity compared to monobloc design. Tool chuck and collet nut fine balanced. Suitable mounting device VN 799 0 see section Knives and Spare Parts.

HSK-F 63, DIN 69893, A = 76 mm, diameter range 6-30 mm, short design, 8° taper angle of the collet
PM 350 0 15

d mm	D mm	DB mm	A mm	GL mm	Weight kg	ID
6 - 30	63	63	76	101,5	1	**037970** ●

Sales unit consisting of clamping chuck with ball bearing collet nut, without collet or spanner.

Spare parts:

BEZ	ABM mm	for S mm	ID
Collet (8°)		6	**037926** ●
Collet (8°)		8	**037927** ●
Collet (8°)		10	**037928** ●
Collet (8°)		12	**037929** ●
Collet (8°)		14	**037930** ●
Collet (8°)		16	**037931** ●
Collet (8°)		20	**037932** ●
Collet (8°)		25	**037933** ●
Collet (8°)		30	**679039** ●
Collet (8°)		6,35 (1/4“)	**037934** ●
Collet (8°)		9,53 (3/8“)	**037935** ●
Collet (8°)		12,7 (1/2“)	**037936** ●
Collet (8°)		15,88 (5/8“)	**037937** ●
Collet (8°)		19,05 (3/4“)	**037938** ●
Collet (8°)		25,4 (1“)	**037939** ●
Sickle spanner	58/62		**005458** ●
Collet chuck nut with ball bearing	M50x1.5		**006639** ●
Chip-Balluff	511 Bytes		**081309** ●
Chip-Balluf	2047 Bytes		**081330** □

● available ex stock
□ available at short notice
Instruction manual visit www.leitz.org



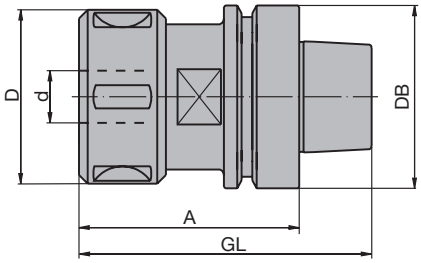

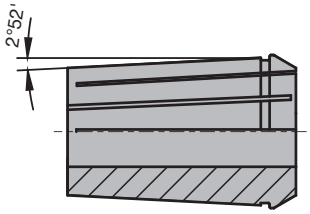

Collet angle 2°52‘: DIN ISO 10897

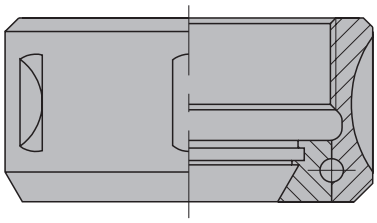

Ball bearing collet nut

Collet chuck with hollow taper shank HSK-F 63

Application:
Precision tool chuck with collet for clamping shank tools with cylindrical shank and shank diameters up to d_{max} = 25.4 mm (1“).

Technical information:
Hollow taper shank as per DIN 69893. Exact concentric running through hardened, ground and double slotted collets. Easy handling as loosening the ball bearing collet nut automatically opens the collet. Suitable for right hand and left hand rotation because of ball bearing collet nut. Ball bearing collet nut for increased clamping forces and improved concentricity compared to monobloc design. Tool chuck and collet nut fine balanced. Suitable mounting device VN 799 0 see section Knives and Spare Parts.

HSK-F 63, DIN 69893, A = 78 / 105 mm clamping area 6-25,4 mm
PM 350 0 06

d mm	D mm	DB mm	A mm	GL mm	Weight kg	ID
6 - 25,4	60	63	78	103	1,1	**037412** ●
6 - 25,4	60	63	105	130	1,5	**037924** ●

Sales unit consisting of clamping chuck with ball bearing collet nut, without collet or spanner.

Spare parts:

BEZ	ABM mm	for S mm	ID
Collet (2°52‘)		6	**037429** ●
Collet (2°52‘)		8	**037430** ●
Collet (2°52‘)		10	**037431** ●
Collet (2°52‘)		12	**037432** ●
Collet (2°52‘)		13	**037433** ●
Collet (2°52‘)		14	**037434** ●
Collet (2°52‘)		16	**037435** ●
Collet (2°52‘)		18	**037436** ●
Collet (2°52‘)		20	**037437** ●
Collet (2°52‘)		25	**037438** ●
Collet (2°52‘)		6,35 (1/4“)	**037495** ●
Collet (2°52‘)		9,53 (3/8“)	**037505** ●
Collet (2°52‘)		12,7 (1/2“)	**037496** ●
Collet (2°52‘)		15,88 (5/8“)	**037502** ●
Collet (2°52‘)		19,05 (3/4“)	**037497** ●
Collet (2°52‘)		25,4 (1“)	**037508** ●
Sickle spanner	58/62		**005458** ●
Collet chuck nut with ball bearing	M48x2		**005714** ●
Chip-Balluff	511 Bytes		**081309** ●
Chip-Balluf	2047 Bytes		**081330** □



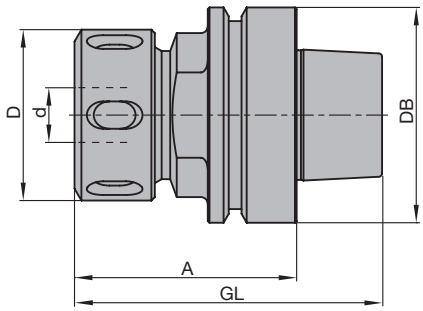

Collet chuck HSK-F 63

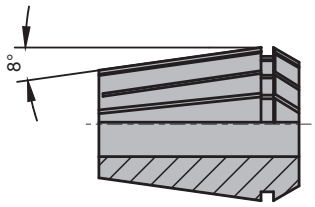

Collet angle 8°: DIN ISO 15488

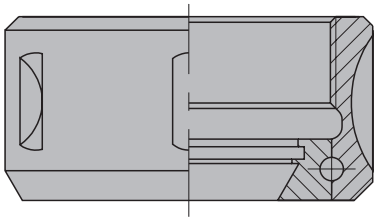

Ball bearing collet nut

Table for max. tool projection:

shank diameter d	max. projection
20	2,2 x d
12-16	3,0 x d
6-10	3,0 x d

Collet chuck with hollow taper shank HSK-F 63, HSC machining

Application:
Precision tool chuck with collet for clamping shank tools with cylindrical shank. For speeds up to n_{max} = 30000 min^{-1}.

Technical information:
Hollow taper shank as per DIN 69893. Exact concentric running through hardened, ground and double slotted collets. Vibration free cutting by short design. Easy handling as loosening the ball bearing collet nut automatically opens the collet. Suitable for right hand and left hand rotation because of ball bearing collet nut. Ball bearing collet nut for increased clamping forces and improved concentricity compared to monobloc design. Tool chuck and collet nut fine balanced. Suitable mounting device VN 799 0 see section Knives and Spare Parts.

HSK-F 63, DIN 69893, A = 65 mm diameter range up to 20 mm, n_{max} = 30000 min^{-1}

PM 350 0 15

d mm	D mm	DB mm	A mm	GL mm	Weight kg	ID
6 - 20	50	63	65	90	0,85	**679041** ●

Sales unit consisting of clamping chuck with ball bearing collet nut, without collet or spanner.

Spare parts:

BEZ	ABM mm	for S mm	ID
Collet (8°)		6	**037439** ●
Collet (8°)		8	**037440** ●
Collet (8°)		10	**037441** ●
Collet (8°)		12	**037442** ●
Collet (8°)		13	**037443** ●
Collet (8°)		14	**037444** ●
Collet (8°)		16	**037445** ●
Collet (8°)		18	**037446** ●
Collet (8°)		20	**037447** ●
Collet (8°)		6,35 (1/4“)	**037509** ●
Collet (8°)		9,53 (3/8“)	**037510** ●
Collet (8°)		12,7 (1/2“)	**037511** ●
Collet (8°)		15,88 (5/8“)	**037507** ●
Collet (8°)		19,05 (3/4“)	**037506** ●
Sickle spanner	45/50		**005491** ●
Collet chuck nut with ball bearing	M40x1.5		**005718** ●
Chip-Balluff	511 Bytes		**081309** ●
Chip-Balluf	2047 Bytes		**081330** □

● available ex stock
□ available at short notice
Instruction manual visit www.leitz.org



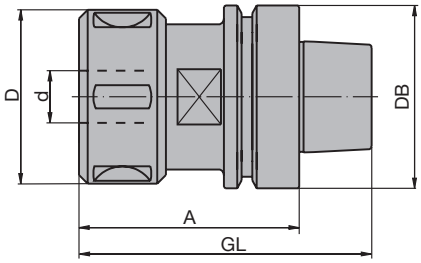

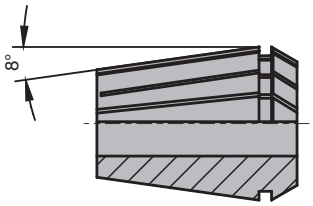

Collet angle 8°: DIN ISO 15488

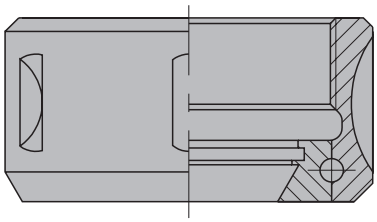

Ball bearing collet nut

Chollet chuck with hollow taper shank HSK-F 80

Application:
Precision tool chuck with collet for clamping shank tools with cylindrical shank and shank diameters up to d_{max} = 30 mm.

Technical information:
Hollow taper shank as per DIN 69893. Exact concentric running through hardened, ground and double slotted collets. Easy handling as loosening the ball bearing collet nut automatically opens the collet. Suitable for right hand and left hand rotation because of ball bearing collet nut. Ball bearing collet nut for increased clamping forces and improved concentricity compared to monobloc design. Tool chuck and collet nut fine balanced. Suitable mounting device VN 799 0 see section Knives and Spare Parts.

HSK-F 80, DIN 69893, A = 78 mm, diameter range 6-30 mm, short design, 8° taper angle of the collet
PM 350 0 15

d mm	D mm	DB mm	A mm	GL mm	Weight kg	ID
6 - 30	63	80	78	110	1,6	**679044** ●

Sales unit consisting of clamping chuck with ball bearing collet nut, without collet or spanner.

Spare parts:

BEZ	ABM mm	for S mm	ID
Collet (8°)		6	**037926** ●
Collet (8°)		8	**037927** ●
Collet (8°)		10	**037928** ●
Collet (8°)		12	**037929** ●
Collet (8°)		14	**037930** ●
Collet (8°)		16	**037931** ●
Collet (8°)		20	**037932** ●
Collet (8°)		25	**037933** ●
Collet (8°)		30	**679039** ●
Collet (8°)		6,35 (1/4“)	**037934** ●
Collet (8°)		9,53 (3/8“)	**037935** ●
Collet (8°)		12,7 (1/2“)	**037936** ●
Collet (8°)		15,88 (5/8“)	**037937** ●
Collet (8°)		19,05 (3/4“)	**037938** ●
Collet (8°)		25,4 (1“)	**037939** ●
Sickle spanner	58/62		**005458** ●
Collet chuck nut with ball bearing	M50x1.5		**006639** ●
Chip-Balluff	511 Bytes		**081309** ●
Chip-Balluf	2047 Bytes		**081330** □

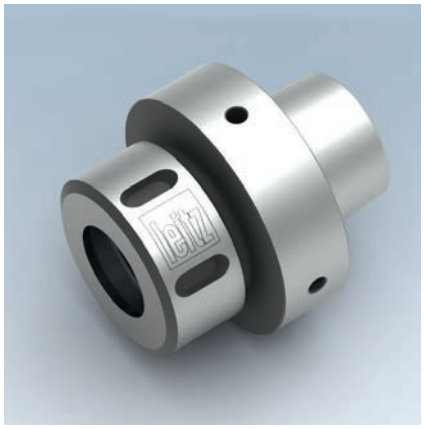

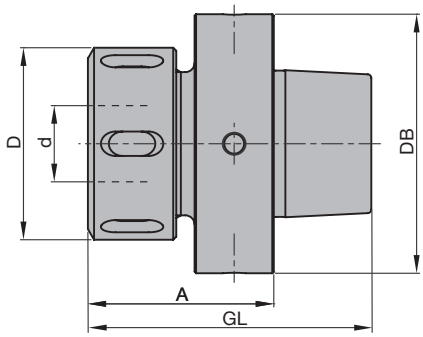

Collet chuck HSK 85 WS

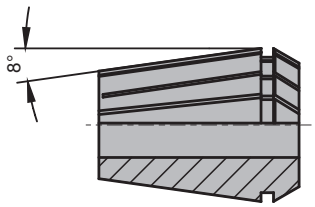

Collet angle 8°: DIN ISO 15488

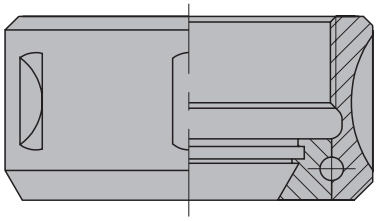

Ball bearing collet nut

Collet chuck with hollow taper shank HSK 85 WS

Application:
Precision tool chuck with collet for clamping shank tools with cylindrical shank and shank diameters up to d_{max} = 30 mm.

Technical information:
Exact concentric running through hardened, ground and double slotted collets. Easy handling by automatic collet opening when loosening the collet nut. Suitable for right hand and left hand rotation because of ball bearing collet nut. Ball bearing collet nut for increased clamping forces and improved concentricity compared to monobloc design. Tool chuck and collet nut fine balanced. Suitable mounting device ID **079010**.

HSK 85 WS, A = 61 mm, diameter range 6-30 mm, 8° taper angle of the collet
PM 350 0 15

Machine	d mm	D mm	DB mm	A mm	GL mm	Weight kg	ID
Weinig	6 - 30	63	85	61	93	1,2	**679038**

Sales unit consisting of clamping chuck with ball bearing collet nut, without collet or spanner.

Spare parts:

BEZ	ABM mm	for S mm	ID
Collet (8°)		6	**037926** ●
Collet (8°)		8	**037927** ●
Collet (8°)		10	**037928** ●
Collet (8°)		12	**037929** ●
Collet (8°)		14	**037930** ●
Collet (8°)		16	**037931** ●
Collet (8°)		20	**037932** ●
Collet (8°)		25	**037933** ●
Collet (8°)		30	**679039** ●
Collet (8°)		6,35 (1/4“)	**037934** ●
Collet (8°)		9,53 (3/8“)	**037935** ●
Collet (8°)		12,7 (1/2“)	**037936** ●
Collet (8°)		15,88 (5/8“)	**037937** ●
Collet (8°)		19,05 (3/4“)	**037938** ●
Collet (8°)		25,4 (1“)	**037939** ●
Sickle spanner	58/62		**005458** ●
Collet chuck nut with ball bearing	M50x1.5		**006639** ●

● available ex stock
□ available at short notice
Instruction manual visit www.leitz.org



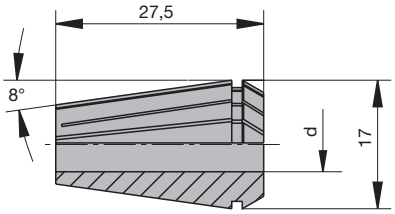

ER 16 collet diamater range 6-10 mm

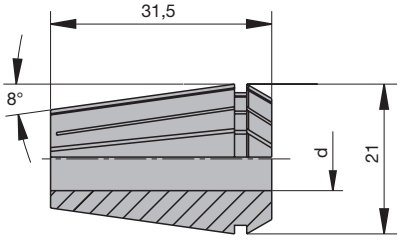

ER 20 collet diamater range 6-13 mm

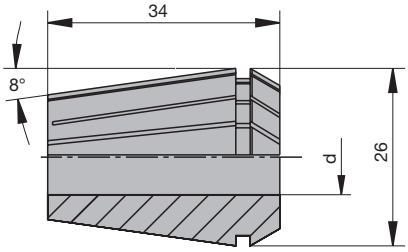

ER 25 collet diamater range 6-16 mm

Collets, type ER, DIN ISO 15488

Application:
For collet chucks and multi spindle units and trimming units with 8° taper angle (type ER, DIN ISO 15488).

Technical information:
Double slotted design for maximum clamping forces and concentricity.

Diamater range 6-10 mm, ER 16, Type 426E, DIN ISO 15488
PM 150 0

BEZ	for S mm	d mm	D mm	GL mm	ID
Collet (8°)	6	5,5 - 6	17	27,5	**037972** ●
Collet (8°)	8	7,5 - 8	17	27,5	**037973** ●
Collet (8°)	10	9,5 - 10	17	27,5	**037974** ●
Collet (8°)	6,35 (1/4“)	5,85 - 6,35	17	27,5	**679022** ●
Collet (8°)	9,53 (3/8“)	9,03 - 9,53	17	27,5	**679023** ●

Spare parts:

BEZ	ABM mm	D mm	Diameter range mm	DRI	ID
Sickle spanner	30/32		6 - 10		**005516** ●
Collet chuck nut with ball bearing	M22x1.5	32	6 - 10	RH	**006645** ●

Diamater range 6-13 mm, ER 20, Type 428E, DIN ISO 15488
PM 150 0

BEZ	for S mm	d mm	D mm	GL mm	ID
Collet (8°)	6	5,5 - 6	21	31,5	**037975** ●
Collet (8°)	8	7,5 - 8	21	31,5	**037976** ●
Collet (8°)	10	9,5 - 10	21	31,5	**037977** ●
Collet (8°)	12	11,5 - 12	21	31,5	**037978** ●
Collet (8°)	6,35 (1/4“)	5,85 - 6,35	21	31,5	**679024** ●
Collet (8°)	9,53 (3/8“)	9,03 - 9,53	21	31,5	**679025** ●
Collet (8°)	12,7 (1/2“)	12,2 - 12,7	21	31,5	**679026** ●

Spare parts:

BEZ	ABM mm	D mm	Diameter range mm	DRI	ID
Sickle spanner	34/36		6 - 12,7		**005498** ●
Collet chuck nut with ball bearing	M25x1.5	35	6 - 13	RH	**006647** ●

Diamater range 6-16 mm, ER 25, Type 430E, DIN ISO 15488
PM 150 0

BEZ	for S mm	d mm	D mm	GL mm	ID
Collet (8°)	6	5,5 - 6	26	34	**037979** ●
Collet (8°)	8	7,5 - 8	26	34	**037980** ●
Collet (8°)	10	9,5 - 10	26	34	**037981** ●
Collet (8°)	12	11,5 - 12	26	34	**037982** ●
Collet (8°)	14	13,5 - 14	26	34	**037983** ●
Collet (8°)	16	15,5 - 16	26	34	**037984** ●
Collet (8°)	6,35 (1/4“)	5,85 - 6,35	26	34	**679027** ●
Collet (8°)	9,53 (3/8“)	9,03 - 9,53	26	34	**679028** ●
Collet (8°)	12,7 (1/2“)	12,2 - 12,7	26	34	**679029** ●
Collet (8°)	15,88 (5/8“)	15,38 - 15,88	26	34	**679030** ●

Spare parts:

BEZ	ABM mm	D mm	Diameter range mm	DRI	ID
Sickle spanner	40/42		6 - 16		**005518** ●
Collet chuck nut with ball bearing	M32x1.5	42	6 - 16	RH	**006649** ●

● available ex stock
□ available at short notice
Instruction manual visit www.leitz.org

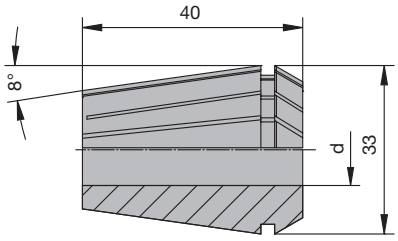

ER 32 collet diamater range 6-20 mm

Diamater range 6-20 mm, ER 32, Type 470E, DIN ISO 15488
PM 150 0

BEZ	for S mm	d mm	D mm	GL mm	ID
Collet (8°)	6	5,5 - 6	33	40	**037439** ●
Collet (8°)	8	7,5 - 8	33	40	**037440** ●
Collet (8°)	10	9,5 - 10	33	40	**037441** ●
Collet (8°)	12	11,5 - 12	33	40	**037442** ●
Collet (8°)	13	12,5 - 13	33	40	**037443** ●
Collet (8°)	14	13,5 - 14	33	40	**037444** ●
Collet (8°)	16	15,5 - 16	33	40	**037445** ●
Collet (8°)	18	17,5 - 18	33	40	**037446** ●
Collet (8°)	20	19,5 - 20	33	40	**037447** ●
Collet (8°)	6,35 (1/4“)	5,85 - 6,35	33	40	**037509** ●
Collet (8°)	9,53 (3/8“)	9,03 - 9,53	33	40	**037510** ●
Collet (8°)	12,7 (1/2“)	12,2 - 12,7	33	40	**037511** ●
Collet (8°)	15,88 (5/8“)	15,38 - 15,88	33	40	**037507** ●
Collet (8°)	19,05 (3/4“)	18,55 - 19,05	33	40	**037506** ●

Spare parts:

BEZ	ABM mm	D mm	Diameter range mm	DRI	ID
Sickle spanner	45/50				**005491** ●
Collet chuck nut with ball bearing	M40x1.5	50	6 - 20	RH	**005718** ●

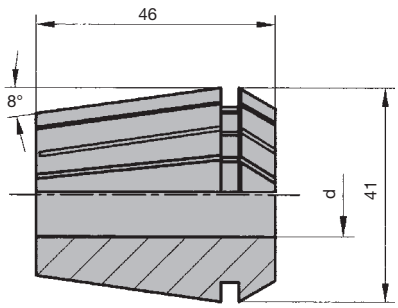

ER 40 collet diamater range 6-30 mm

Diamater range 6-30 mm, ER 40, Type 472E, DIN ISO 15488
PM 150 0

BEZ	for S mm	d mm	D mm	GL mm	ID
Collet (8°)	6	5,5 - 6	41	46	**037926** ●
Collet (8°)	8	7,5 - 8	41	46	**037927** ●
Collet (8°)	10	9,5 - 10	41	46	**037928** ●
Collet (8°)	12	11,5 - 12	41	46	**037929** ●
Collet (8°)	14	13,5 - 14	41	46	**037930** ●
Collet (8°)	16	15,5 - 16	41	46	**037931** ●
Collet (8°)	20	19,5 - 20	41	46	**037932** ●
Collet (8°)	25	24,5 - 25	41	46	**037933** ●
Collet (8°)	30	29,5 - 30	41	46	**679039** ●
Collet (8°)	6,35 (1/4“)	5,85 - 6,35	41	46	**037934** ●
Collet (8°)	9,53 (3/8“)	9,03 - 9,53	41	46	**037935** ●
Collet (8°)	12,7 (1/2“)	12,2 - 12,7	41	46	**037936** ●
Collet (8°)	15,88 (5/8“)	15,38 - 15,88	41	46	**037937** ●
Collet (8°)	19,05 (3/4“)	18,55 - 19,05	41	46	**037938** ●
Collet (8°)	25,4 (1“)	24,9 - 25,4	41	46	**037939** ●

Spare parts:

BEZ	ABM mm	D mm	Diameter range mm	DRI	ID
Sickle spanner	58/62		6 - 30		**005458** ●
Collet chuck nut with ball bearing	M50x1.5	63	6 - 30	RH	**006639** ●

● available ex stock
□ available at short notice
Instruction manual visit www.leitz.org



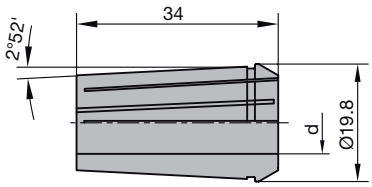

Collet type 407E diamater range 6-12.7 mm

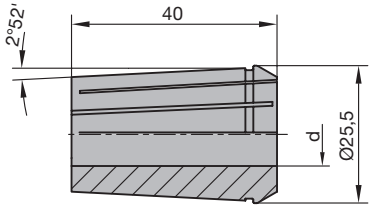

Collet type 415E diamater range 6-16 mm

Collets, DIN ISO 10897, taper ratio 1:10

Application:
For collet chucks as well as for multi spindle units and trimming units with 2°52‘ taper angle (taper ratio 1:10).

Technical information:
Double slotted design for maximum clamping forces and concentricity.

Diamater range 6-12.7 mm, Type 407E, DIN ISO 10897
PM 150 0

BEZ	for S mm	d mm	D mm	GL mm	ID
Collet (2°52‘)	6	6	19,8	34	**679013** ●
Collet (2°52‘)	7	7	19,8	34	**679015** ●
Collet (2°52‘)	8	8	19,8	34	**679016** ●
Collet (2°52‘)	10	10	19,8	34	**679019** ●
Collet (2°52‘)	12	12	19,8	34	**679020** ●
Collet (2°52‘)	6,35 (1/4“)	6,35	19,8	34	**679014** ●
Collet (2°52‘)	9,53 (3/8“)	9,53	19,8	34	**679018** ●
Collet (2°52‘)	12,7 (1/2“)	12,7	19,8	34	**679021** ●

Spare parts:

BEZ	ABM mm	D mm	Diameter range mm	DRI	ID
Sickle spanner	34/36		6 - 12,7		**005498** ●
Collet chuck nut	M27x1.5	35		RH	**006653** ●

Diamater range 6-16 mm, Type 415E, DIN ISO 10897
PM 150 0

BEZ	for S mm	d mm	D mm	GL mm	ID
Collet (2°52‘)	6	6	25,5	40	**679005** ●
Collet (2°52‘)	8	8	25,5	40	**679032** ●
Collet (2°52‘)	9	9	25,5	40	**679033** ●
Collet (2°52‘)	9,5	9,5	25,5	40	**679034** ●
Collet (2°52‘)	10	10	25,5	40	**679006** ●
Collet (2°52‘)	12	12	25,5	40	**679036** ●
Collet (2°52‘)	13	13	25,5	40	**679007** ●
Collet (2°52‘)	14	14	25,5	40	**679037** ●
Collet (2°52‘)	16	16	25,5	40	**679008** ●
Collet (2°52‘)	6,35 (1/4“)	6,35	25,5	40	**679009** ●
Collet (2°52‘)	12,7 (1/2“)	12,7	25,5	40	**679011** ●

Spare parts:

BEZ	ABM mm	D mm	Diameter range mm	DRI	ID
Sickle spanner	40/42		6 - 16		**005469** ●
Collet chuck nut with ball bearing	M33x1.5	43		RH	**005685** ●

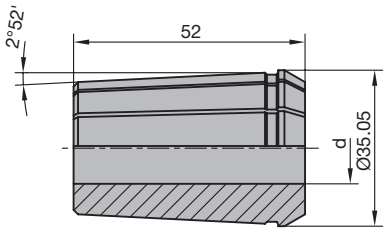

Collet type 462E diamater range 6-25.4 mm

Diamater range 6-25.4 mm, Type 462E, DIN ISO 10897
PM 150 0

BEZ	for S mm	d mm	D mm	GL mm	ID
Collet (2°52')	6	6	35,05	52	**037429** ●
Collet (2°52')	8	8	35,05	52	**037430** ●
Collet (2°52')	10	10	35,05	52	**037431** ●
Collet (2°52')	12	12	35,05	52	**037432** ●
Collet (2°52')	13	13	35,05	52	**037433** ●
Collet (2°52')	14	14	35,05	52	**037434** ●
Collet (2°52')	16	16	35,05	52	**037435** ●
Collet (2°52')	18	18	35,05	52	**037436** ●
Collet (2°52')	20	20	35,05	52	**037437** ●
Collet (2°52')	25	25	35,05	52	**037438** ●
Collet (2°52')	6,35 (1/4")	6,35	35,05	52	**037495** ●
Collet (2°52')	9,53 (3/8")	9,53	35,05	52	**037505** ●
Collet (2°52')	12,7 (1/2")	12,7	35,05	52	**037496** ●
Collet (2°52')	15,88 (5/8")	15,88	35,05	52	**037502** ●
Collet (2°52')	19,05 (3/4")	19,05	35,05	52	**037497** ●
Collet (2°52')	25,4 (1")	25,4	35,05	52	**037508** ●

Spare parts:

BEZ	ABM mm	D mm	Diameter range mm	DRI	ID
Sickle spanner	58/62		6 - 30		**005458** ●
Collet chuck nut with ball bearing	M48x2	60		RH	**005714** ●

● available ex stock
□ available at short notice
Instruction manual visit www.leitz.org

Application

High-stability shank tool clamping.

Machine

Stationary routers with CNC control and spindles for automatic tool change.
Milling machines with spindles for automatic tool change.

Technical features

Weldon chucks are used to clamp shank tools rigidly.
Weldon chucks have a similar rigidity to shrink-fit chucks, but the run out tolerance of shrink-fit chucks is significantly higher.
Shrink-fit chucks are recommend for machining operations demanding high quality.

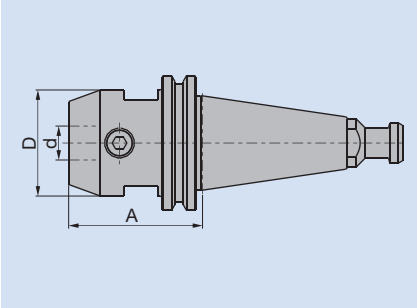

D	Largest diameter of the chuck in the clamping area
d	Clamping or bore diameter
A	Length from the reference point on the steep taper or the HSK reference surface

Permissible shank tolerances

Tools clamped in weldon chucks must have at least the following tool shank tolerances:

	Diameter of shank	
Tools mounted in Weldon chucks	16 mm	20 mm
	ISO g7	ISO g7

Clamping flat

The shanks of tools clamped in Weldon chucks must have a driving flat to DIN 1835.

The following drawing details the dimensions of the clamping flat:

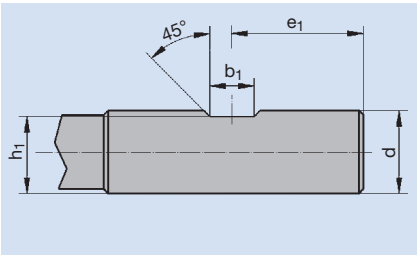

d	e_1	b_1	h_1
16	24	10	14.2
20	25	11	18.2

Application data

Maximum RPM
Maximum RPM for Weldon chucks: n_{max} = 24000 min^{-1}.

Order information

Weldon chucks with adaptors SK 30 / SK 40 as well as HSK-E / HSK-F supplied on request.



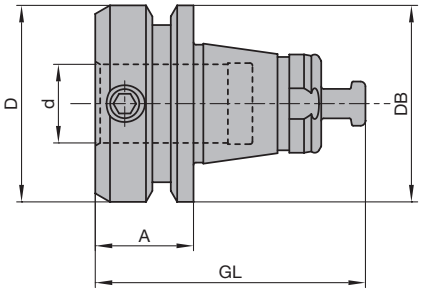

Weldon clamping chuck

Required shank design:

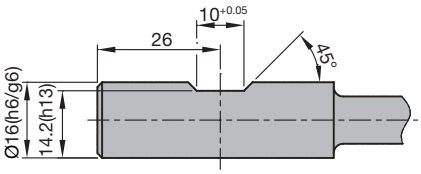

Clamping chuck with steep taper for CNC aggregates

Application:
Precision tool chuck for clamping shank tools with cylindrical shank and shank diameters up to d_{max} = 16 mm.

Technical information:
Steep taper design for Flex 5+ aggregates (Homag Group) and 5-motion-Plus aggregate (Felder Format-4). High stability for medium difficult cutting operations. Easy tool change through opening of the radial clamping screw. Tool adaptor fine balanced. Maximum tool protrusion (length projecting of the chuck) 60 mm.

A = 20 mm, clamping diameter 16 mm
PM 320 0 53

Machine	d mm	D mm	DB mm	A mm	GL mm	Weight kg	ID
Felder Format-4, Homag Group	16	40	40	20	55	0,3	**037722** □

Spare parts:

BEZ	ABM mm	ID
Clamping screw	M8x10	**007800** □
Allen key	SW 4	**005434** ●

● available ex stock
□ available at short notice
Instruction manual visit www.leitz.org

Application

Clamping drills.

Machine

Stationary routers with CNC control and spindles for automatic tool change.
Milling machines with spindles for automatic tool change.
Routers without automatic tool change.
Drilling machines.

Technical features

1. Conventional drill adaptors
Drill adaptors are used to mount dowel drills, through hole drills or hinge boring bits in drilling machines.
Below an overview of the available adaptors:

A

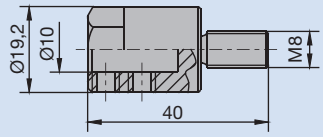

Nottmeyer
(old machine design)

E

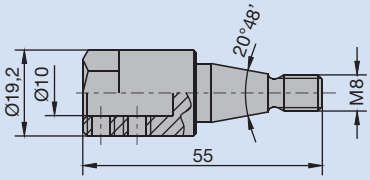

Bilek Type K and N
Knoevenagel

B

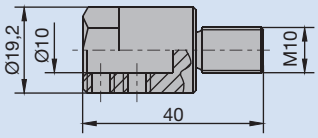

Ayen, Brandt
Knoevenagel
Mayer
Reichenbacher
Torwegge
Zubiola

F

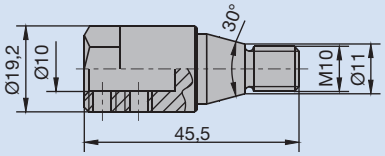

Alberti, Balestrini, Bilek
Busellato, Dubus, Goma
Grotefeld, Ompec, Reimall
SCM, Schleicher, Tanzani
Viciani, Vitap (before year 4/91)
Weingärtner

C

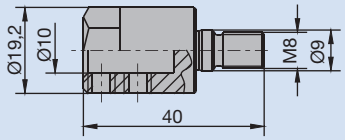

Lehbrink
Nottmeyer
(new machine design)

G

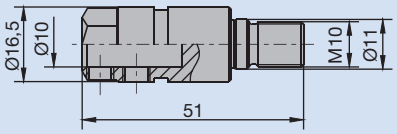

Morbidelli

D

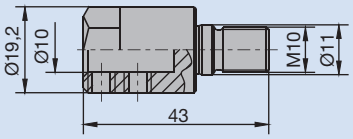

Alberti, Balestrini, Biesse
Böttcher & Gessner
Busellato, Goma, Grotefeld
Hüllhorst, Holz-Her, Koch
Morbidelli, Reimall, Torwegge
Vitap (after year 4/91)
Weeke

H

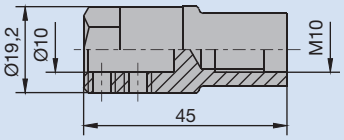

Scheer

The drill is clamped in the adaptor by a screw. The shank has to have a driving flat.

2. Drill chuck for CNC machining centres
Drill chucks are an easy way to carry drills in machines with magazines. The drill chuck is a 3 wedge chuck with an interface to suit the tool spindle.

D	Largest external diameter of the chuck
d	Clamping diameter
A	Length from the reference point (steep taper) or reference surface (HSK)

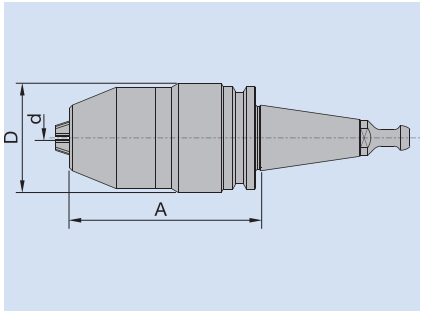

3. Quick change adaptor
Adaptor system for dowel drills, through hole drills and hinge boring bits for different drilling machines. The quick change adaptor is a quick and easy way to change drills in the machine without using tools.

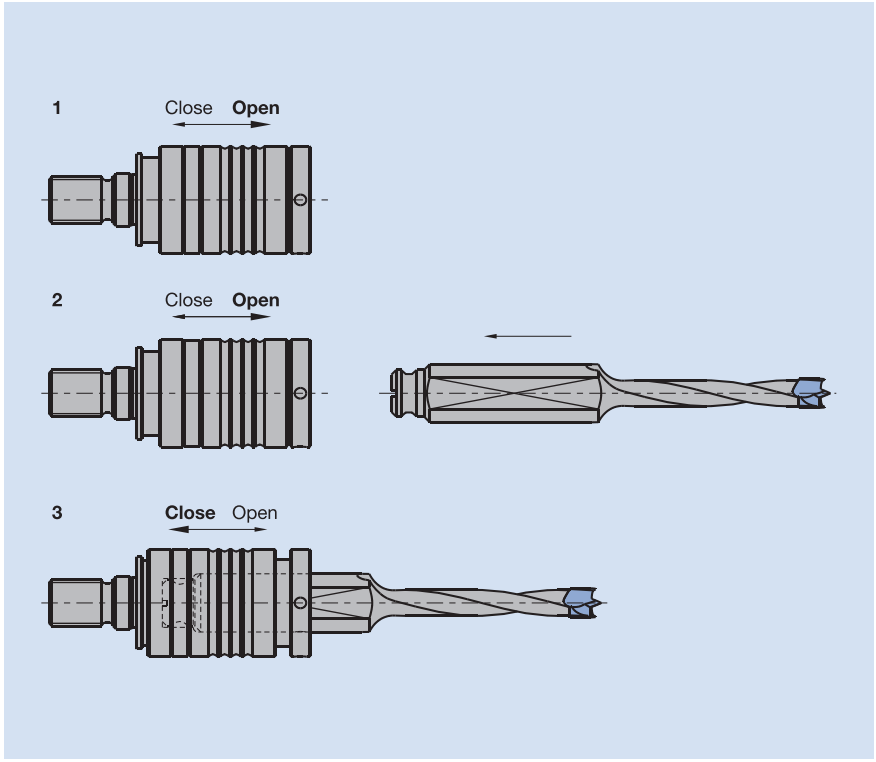

Changing a drill.
For a perfect fit of the shank a special length adjustment screw (ID **009157**) is required. This screw allows exact length adjustment of the mounted drills.

Required shank tolerance

Clamping drills safely requires the following shank and driving flat tolerance:

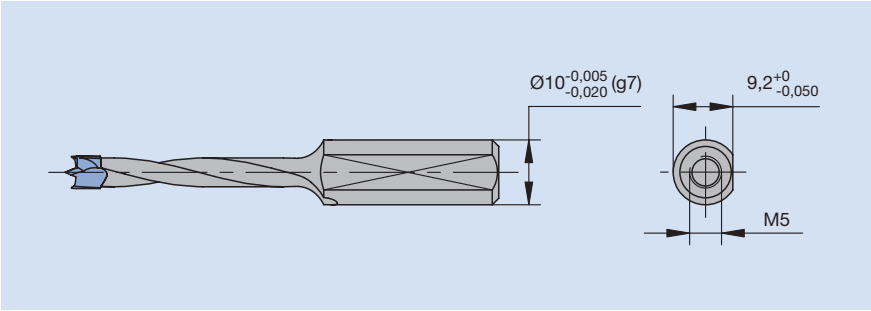

Application Data

Maximum allowable RPM
Maximum allowable RPM for drill adaptors (adaptor in spindle):
n_{max} = 9000 min^{-1}.

Conventional drill adaptors and quick change adaptors can be used up to
n_{max} = 12000 min^{-1}.



Drill adaptor, conventional clamping

Application:
Clamping chuck for drill bits with 10 mm shank diameter and driving flat for drilling spindles with threaded adaptor.

Technical information:
Stable and secure clamping of drills by 2 clamping screws. Smallest spindle pitch in the drilling unit: 21 mm. For narrower pitches, 8 mm shank chucks and drills must be used.

Clamping chuck for drills with 10 mm shank and driving flat
PM 320 0 28, PM 320 0 29, PM 320 0 30, PM 320 0 32, PM 320 0 34, PM 320 0 40, PM 320 0 42, PM 320 0 46, PM 320 0 50

Machine	GL mm	Pic.	ID LH	ID RH
Nottmeyer (old machine type)	40	A	**033088** ●	**033089** ●
Ayen, Brandt, Holzma, Homag, Knoevenagel, Mayer, Reichenbacher, Torwegge, Zubiola	40	B	**033092** ●	**033093** ●
Lehbrink, Nottmeyer (new machine type)	40	C	**033080** ●	**033081** ●
Lehbrink, Nottmeyer (new machine type)	52	C	**033082** ●	**033083** ●
Alberti, Balestrini, Biesse, Böttcher & Gessner, Busellato, Goma, Grotefeld, Holz-Her, Homag, Hüllhorst, Koch, Morbidelli, Reimall, Torwegge, Vitap (from YOM 4/91 on), Weeke	43	D	**033086** ●	**033087** ●
Bilek, Knoevenagel	55	E	**033084** ●	**033085** ●
Alberti, Balestrini, Bilek, Busellato, Dubus, Goma, Grotefeld, Ompec, Reimall, Schleicher, SCM, Tanzani, Viciani, Vitap (up to YOM 4/91), Weingärtner	45,5	F	**033090** ●	**033091** ●
Morbidelli	51	G	**033094** ●	**033095** ●
Scheer	45	H	**033096** ●	**033097** ●

Spare parts:

BEZ	ABM mm	ID
Allen key	SW 3	**005433** ●
Allen screw	M6x5	**005836** ●

A

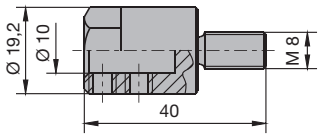

B

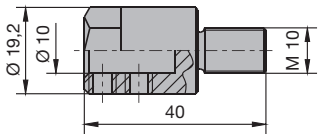

C

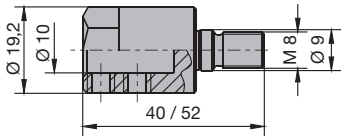

D

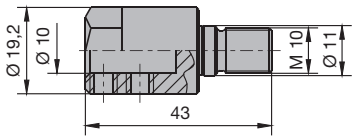

E

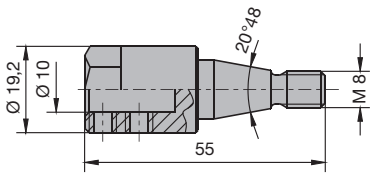

F

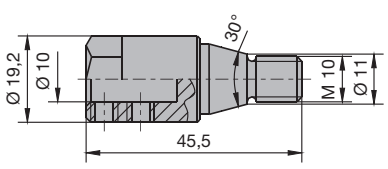

G

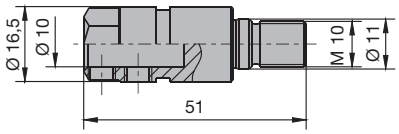

H

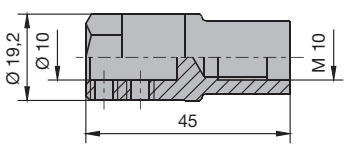

● available ex stock
□ available at short notice
Instruction manual visit www.leitz.org



Drill adaptor, quick clamping design

Application:
Quick clamping chuck for drills with 10 mm shank and driving flat for drilling spindles with threaded adaptor.

Technical information:
The drill is held in the chuck by the length adjusting screw (ID **009157**). Ideal if the hole diameter must be changed quickly. Quick clamping chucks not in use should be covered using the optional dust cover.
Note: The drill shanks require an appropriate shank and driving flat dimensional tolerance to ensure trouble free operation. Drills from the Leitz range guarantees functional reliability. Speed up to 12000 min^{-1} (quick change drill adaptor without drill must be covered with the dust cover ID **115521** for speeds exceeding 9000 min^{-1} to prevent unbalance).

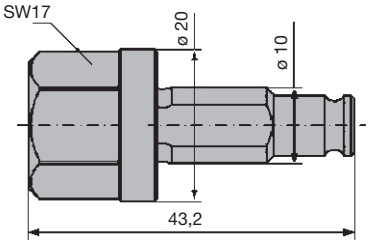

Mounting device ID **115522**

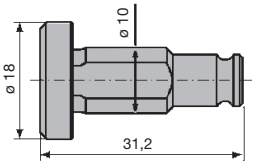

Dust cover ID **115521**

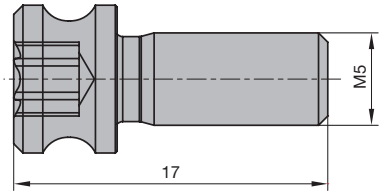

Length adjustment screw ID 009157

Clamping chuck for drills with 10 mm shank and driving flat
PM 320 0, PM 320 0 55, PM 320 0 56, PM 320 0 57, PM 320 0 58, PM 320 0 59

Machine	BEM	GL mm	Pic.	ID LH	ID RH
Lehbrink, Nottmeyer (new machine type)		45	A	**033102** ●	**033103** ●
Ayen, Brandt, Holzma, Homag, Knoevenagel, Mayer, Reichenbacher, Torwegge, Zubiola		45	B	**033104** ●	**033105** ●
Nottmeyer (old machine type)		45	C	**033098** ●	**033099** ●
Alberti, Biesse, Böttcher & Gessner, Busellato, Goma, Grotefeld, Holz-Her, Homag, Hüllhorst, Koch, Morbidelli, Reimall, Torwegge, Vitap (from YOM 4/91 on), Weeke		46	D	**033100** ●	**033101** ●
Homag, Weeke	from year of construction 2/04 on	40,25	E	**033109** ●	**033110** ●
Universal	Shank D-10 mm	50	F	**033106** ●	**033106** ●

Spare parts:

BEZ	ABM mm	ID
Dust cover	d8/10/D18/L31.2	**115521** ●
Mounting device	d8/10/D20/L43.2/SW17	**115522** ●
Length adjustment screw Torx® 20	M5x17	**009157** ●

A

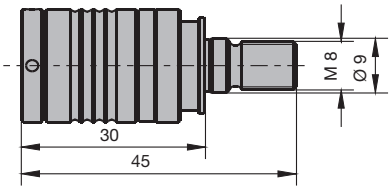

C

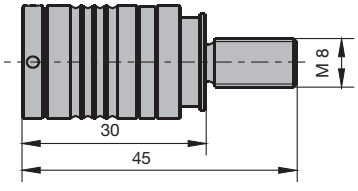

E

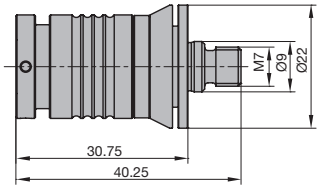

B

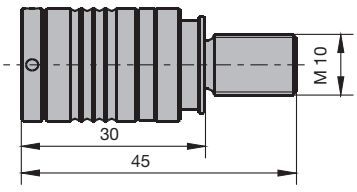

D

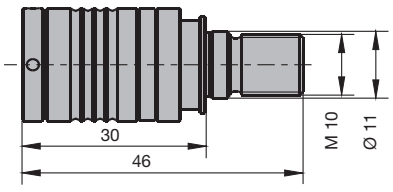

F

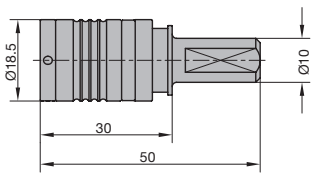

● available ex stock
□ available at short notice
Instruction manual visit www.leitz.org



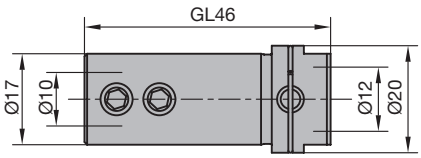

Drill adaptor for Weeke

Drill adaptor

Application:
For mounting dowel drills, through hole drills and hinge boring bits on point-to-point drilling machines, through feed drilling machines and stationary drilling machines.

Technical information:
Wear resistant material, ground surface. High concentricity for clean holes and long drill life time.

For Weeke through-feed machines
PM 320 0

Machine	d mm	D mm	GL mm	ID
Homag, Weeke	10	20	46	**033107** ●

Spare parts:

BEZ	ABM mm	ID
Allen key	SW 3	**005433** ●
Allen screw	M6x4	**005837** ●



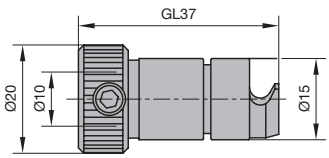

Drill adaptor for Biesse

Drill adaptor

Application:
For mounting dowel drills, through hole drills and hinge boring bits on point-to-point drilling machines, through feed drilling machines and stationary drilling machines.

Technical information:
Wear resistant material, ground surface. High concentricity for clean holes and long drill life time.

For Biesse boring units
PM 320 0

Machine	d mm	D mm	GL mm	ID
Biesse	10	20	37	**033108** ●

Spare parts:

BEZ	ABM mm	ID
Allen key	SW 3	**005433** ●
Allen screw	M6x5	**005836** ●

● available ex stock
□ available at short notice
Instruction manual visit www.leitz.org



Quick change drill adaptor, spare parts for previous system

Tool adaptor for drills with 10 mm shanks
PM 320 0 02

d mm	D mm	GL mm	ID LH	ID RH
10	20	29	**033270** ●	**033271** ●

Spare parts:

BEZ	ABM mm	ID
Allen key	SW 3	**005433** ●
Allen screw	M6x5	**005836** ●

Tool adaptor for drills with 8 mm shanks
PM 320 0 01

d mm	D mm	GL mm	ID LH	ID RH
8	15,5	29	**033170** ●	**033171** ●

Spare parts:

BEZ	ABM mm	ID
Allen key	SW 3	**005433** ●
Allen screw	M6x5	**005836** ●



Drill chuck for CNC spindle

Application:
Clamping chuck for drills for CNC routers and machining centres.

Technical information:
Precision design with high concentricity < 0.02 mm. Special clamping mechanism with improved holding forces to prevent the tool shank from slipping. Stepless adjustable clamping range: 1-13 mm (SK 30, ISO 30, SK 40), 1-16 mm (HSK-E/-F 63). Fine balanced design. Clamping wedges hardened for improved wear resistance. Suitable for right hand and left hand rotation. Only to be used for drills.

Stepless adjustable clamping range
PM 330 0

Type	d mm	D mm	DB mm	A mm	GL mm	Weight kg	S mm	ID
A	1 - 13	50	50	103	174,8	1,30	SK 30	**037758** □
B	1 - 13	50	50	103	174,8	1,30	SK 30	**037759** □
E	1 - 13	50	63,55	87,5		1,50	SK 40	**037761** ●
	1 - 16	50	63	98	129,6	1,80	HSK-E 63	**037763** ●
	1 - 16	50	63	98	123	1,70	HSK-F 63	**037762** ●

Spare parts:

BEZ	for S mm	ABM mm	L mm	ID
Allen key	SK	SW 6	100	**005447** ●
Allen key	HSK	SW 4	100	**005503** ●

Conditions to be observed during clamping:

- Minimum clamping length l_{min} = 20 mm
- Maximum clamping length l_{max} = 29 mm

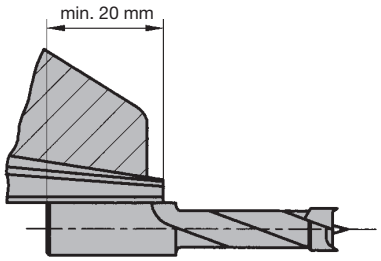

- Do not clamp tapered shanks
- If possible use cylindrical shanks without clamping flat, grooves or other recesses

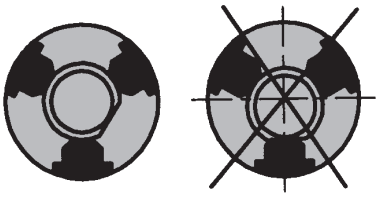

- If drills with driving flat are used, the clamping flat is not allowed to touch the clamping wedges. See illustration

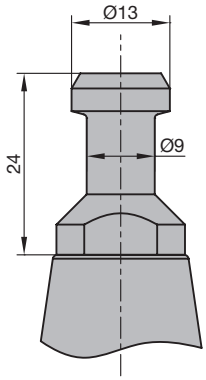

Type: A
SK 30 pull stud as per DIN ISO 7388

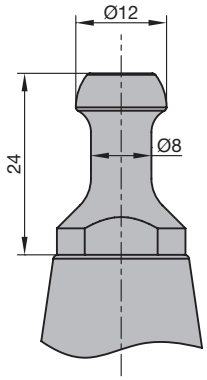

Type: B
SK 30/ISO 30 pull stud for HSD spindles from construction year 9/92 on

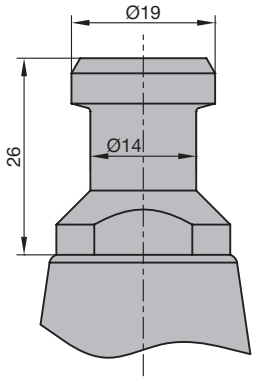

Type: E
SK 40 pull stud as per DIN ISO 7388

● available ex stock
□ available at short notice
Instruction manual visit www.leitz.org

7.4 Clamping arbors
7.4.1 Hydro clamping arbors

Application

Play-free mounting of single cutters or cuttersets with bore.

Machine

Stationary routers with CNC control and spindles for automatic tool change.
Milling machines with spindles for automatic tool change.

Technical features

Hydro clamping arbors are used to mount tools, cutterheads, cutters and sawblades on CNC machining centres or continuous machines with spindles for automatic tool change. Hydro clamping enables play-free clamping of respective tools.

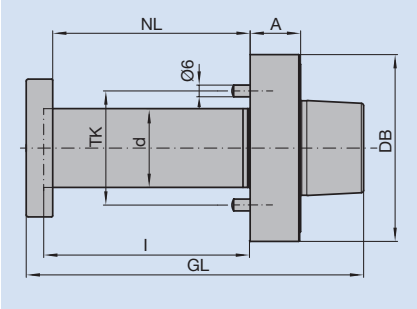

d	Diameter of the arbor
NL	Clamping length
DB	Outer diameter groove
A	Length from reference point (steep taper) or reference surface (HSK)
DTK	Pitch diameter, screw or pin bore

Permissible bore tolerances

Tools mounted on arbors must have at least the following bore tolerance:

	Bore tolerance
Tools mounted on hydro clamping chucks	ISO H7

Information

Please observe the data of the machine producer for the allowed maximal weight and diameter as well as the maximal tool RPM!







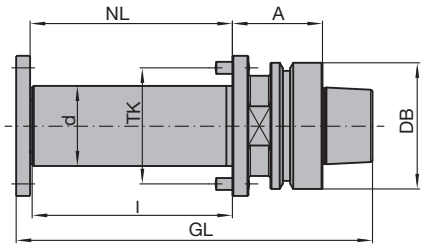

Hydro clamping arbor HSK-F 63

Hydro clamping arbor HSK-F 63 / HSK-E 63

Application:
For precise and play-free mounting of tools with bore, such as sawblades, tools, toolsets and cutterheads.

Machine:
Machines with HSK-F 63 or HSK-E 63 adaptor, e.g. moulders, window producing machines, CNC-machining centres etc.

Technical information:
Hollow taper shank design as per DIN 69863. Play-free and precise adaption of bore tools through hydro clamping arbors. Axial clamping actuation of the closed hydro system. Safety against twisting of the tools through pins and screws.
Note: Please observe the admitted maximum weight and diameters as well as the maximum tool RPM of the machine producer!

HSK-F / E 63, A = 45 / 90 mm
PH 160 0 04, PH 160 0 05

d	l	NL	A	GL	DB	TK	Weight	S	ID
mm	mm	mm	mm	mm	mm	mm	kg	mm	
40	100	101	45	178	63	58	2,18	HSK-F 63	**663811**
40	140	141	45	218	63	58	2,67	HSK-F 63	**663812**
40	190	191	45	268	63	58	3,05	HSK-F 63	**663813** ●
40	190	191	90	313	63	58	4,41	HSK-F 63	**663814**
40	190	191	45	275	63	58	3,2	HSK-F 63	**663815**
40	190	191	90	320	63	58	4,5	HSK-E 63	**663816**



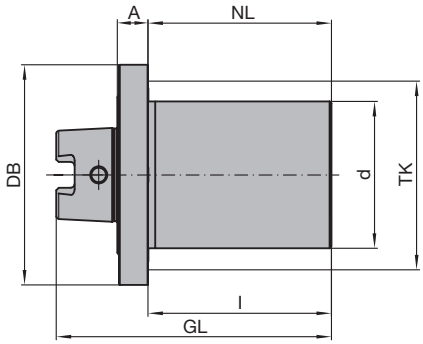

Hydro clamping arbor HSK-F 63 mod.
PH 160 0 02

Hydro clamping arbor HSK-F 63 mod.

Application:
Hydro clamping arbor for precise and play-free mounting of tools with bore such as circular sawblades, tools, toolsets and cutterheads for high concentricity.

Machine:
Machines with HSK-F 63 interface, e.g. laminate and parquet flooring lines, edgebanding machines, double-end tenoners, profile cutting machines etc.

Technical information:
Closed hydro clamping system with maintenance free pressurising piston mechanism. User friendly axial positioned hydro clamping screw. Play-free and precise mounting of tools with bores on hydro clamping arbors. Suitable for RH and LH. RPM n_{max} 12000^{-1}.
Note: Check the allowed maximum RPM of the tool mounted on the arbor!

HSK-F 63 mod. for tools with bore 60 mm, A = 12.5 mm
PH 160 0 02

Machine	d	l	NL	GL	DB	TK	Weight	ID
	mm	mm	mm	mm	mm	mm	kg	
Homag	60	75	75	112,5	63	75	2,25	**663804**

Suitable spacers, see section Knives and Spare Parts.

● available ex stock
□ available at short notice
Instruction manual visit www.leitz.org







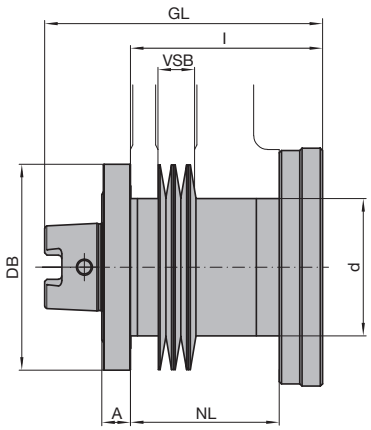

Hydro clamping arbor HSK-F 63 mod.
with stepless fine adjustment
PH 160 0 03

Hydro clamping arbor HSK-F 63 mod. with stepless fine adjustment

Application:
Hydro clamping arbor for precise and play-free mounting of tools with bore such as circular sawblades, toolsets and sets of cutterheads for high concentricity. Fine thread design of the hydro clamping arbor allows stepless fine adjustment of multi part tooling sets.

Machine:
Machines with HSK-F 63 adaptor, e.g. laminate and parquet flooring lines, edgebanding machines, double-end tenoners, profile cutting machines etc.

Technical information:
Closed hydro clamping system with maintenance free pressurising piston mechanism. User friendly axial positioned hydro clamping screw. Play-free and precise mounting of tools with bores on hydro clamping arbors. Suitable for RH and LH. RPM n_{max} 12000^{-1}.
Note: Check the allowed maximum RPM of the tool mounted on the arbor!

HSK-F 63 mod. for tools with bore 60 mm, A = 12.5 mm
PH 160 0 03

Machine	d mm	l mm	NL mm	VSB	GL mm	DB mm	TK mm	Weight kg	ID
Homag	60	75	42 - 52	10	116,5	63	75	2,8	**663803** ●







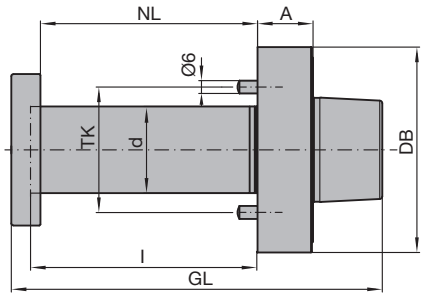

Hydro clamping arbor HSK 85 WS - PH 160 0 01

Hydro clamping arbor HSK 85 WS

Application:
For precise, play-free mounting of tools with bore, such as sawblades, cutting tools, sets of cutting tools and cutterheads.

Machine:
Machines with HSK 85 WS adaptor e.g. moulders (Weinig Powermat), window production machines etc.

Technical information:
Play-free and precise mounting of tools with bore by hydro arbors. Radial clamping by closed hydro system. Easy and safe handling with optionally lifting rings.
Note: Observe the information of the machine producer for the permitted maximum weight and diameter as well as the maximum tool RPM!

HSK 85 WS, A = 26 mm
PH 160 0 01

Machine	d mm	l mm	NL mm	GL mm	DB mm	TK mm	Weight kg	ID
Weinig	40	105,5	100	171,5	85	58	2,9	**663800** ●
Weinig	40	175,5	170	265,5	85	58	3,8	**663802** ●

Suitable spacers, see section Knives and Spare Parts.

● available ex stock
□ available at short notice
Instruction manual visit www.leitz.org

Application

For mounting single cutters or cuttersets with bore.

Machine

Stationary routers with CNC control and spindles for automatic tool change, Through-feed machines and milling machines with spindles for automatic tool change.

Technical features

Cutter arbors are used to mount tools, cutterheads, cutters and sawblades on CNC machining centres or trough-feed machines with spindles for automatic tool change. The arbor clamping length can be altered to suit the application and tool.

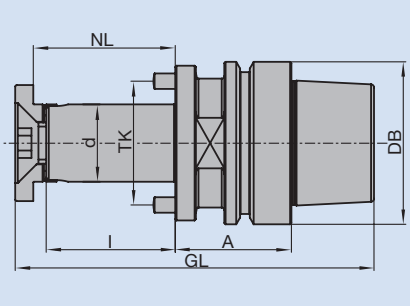

d	Diameter of the arbor
l	Clamping length
DB	Outer diameter groove
A	Length from reference point (steep taper) or reference surface (HSK)
DTK	Pitch diameter, screw or pin bore

Permissible bore tolerances

Tools mounted on arbors must have at least the following bore tolerance:

	Bore tolerance
Tools mounted on arbors	ISO H7

Information

Please observe the data of the machine producer for the allowed maximal weight and diameter as well as the maximal tool RPM!



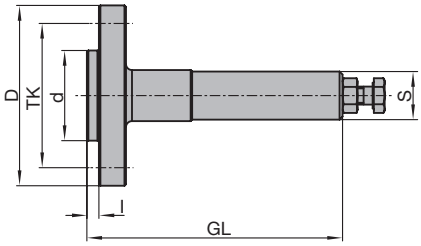

Arbor, short design

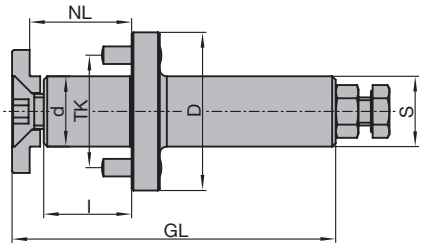

Arbor, long design

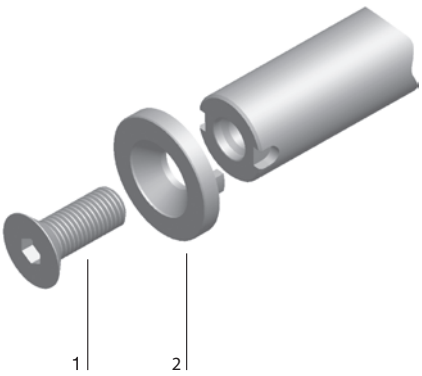

1 Clamping screw
2 Conical spring washer for safety against twisting

Cutter arbor with cylindrical shank

Application:
Arbor for single tools with bore or tool sets with bore.

Technical information:
Cylindrical shank design. Short design for grooving cutter and sawblades up to widths NB = 10 mm. Long design for one part or multi part tools/tool sets. Safety device against tool twisting by screw or pin. Cutter arbors are fine balanced.
If conical spring washers with safety device against twisting are used, slots are required in the cutter arbor.
Note: Maximum admissible speed n_{max} depends on the mounted tools. Please comply with the specifications regarding the maximum admissible weight and diameters detailed by the machine manufacturer.

Short version
TI 501 0 04

d mm	l mm	D mm	GL mm	TK mm	S mm	ID
30	4	60	85	48	16x50	**041429** ●
30	4	59	102	48	20x50	**041368** ●
30	4	59	102	48	25x60	**041367** ●
30	4	59	127	48	25x60	**042980** ●

With four countersunk screws M6X16. Maximum diameter for circular saw blades = 250 mm.

Long design
TI 501 0 03

d mm	l mm	NL mm	D mm	GL mm	TK mm	S mm	ID
20	25	29	50	92	32	20x50	**042982** □
20	40	44	50	107	32	20x50	**042983** □
20	55	59	50	122	32	20x50	**042984** ●
20	40	44	50	116	32	25x60	**041124** ●
20	55	59	50	131	32	25x60	**041125** ●
20	70	74	50	146	32	25x60	**041126** ●
30	25	30	59	95	48	20x50	**042985** □
30	40	45	59	110	48	20x50	**042986** ●
30	25	30	59	105	48	25x60	**041127** □
30	40	45	59	120	48	25x60	**041128** ●

Sales unit consisting of arbor, clamping screw and conical spring washer (flat design), without spacers.

Spare parts:

BEZ	ABM mm	for d mm	ID
Washer with safety device against twisting, M10	20/35x13x10,5	20	**006768** ●
Washer with safety device against twisting, M16	30/45x15x16,5	30	**006769** ●

Suitable spacers, see section Knives and Spare Parts.

● available ex stock
□ available at short notice
Instruction manual visit www.leitz.org



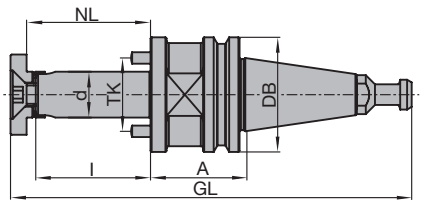

Arbor SK 30/SK 40

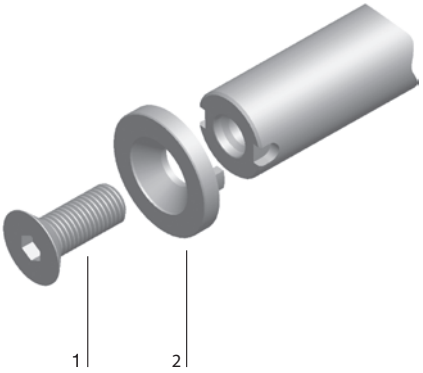

1 Clamping screw
2 Conical spring washer for safety against twisting

Cutter arbor with steep taper SK 30 / SK 40

Application:
Arbor for single tools with bore or tool sets with bore.

Technical information:
Steep taper design as per DIN ISO 7388, without grooves and notches. Short design, suitable for low vibration cutting. Safety device against tool twisting by screw or pin. Arbors are fine balanced. If conical spring washers with safety device against twisting are used, slots are required in the arbor. For suitable mounting device VN 799 0, see section Knives and Spare Parts.
Note: Please comply with the specifications regarding the maximum admissible weight and diameters detailed by the machine manufacturer!

SK 30, A = 42 mm
TI 501 0 01

Type	d mm	l mm	NL mm	GL mm	DB mm	TK mm	Weight kg	ID
A	20	70	74	194,8	50	32	1	**041137** □
A	30	80	85	205,8	50	48	1,3	**042814** □
B	20	70	74	194,8	50	32	1	**041370** □
B	30	80	85	205,8	50	48	1,3	**041373** □
C	20	70	74	194,8	50	32	1	**042832** □
C	30	80	85	205,8	50	48	1,3	**042836** □

SK 40, A = 42 mm
TI 501 0 01

Type	d mm	l mm	NL mm	GL mm	DB mm	TK mm	Weight kg	ID
E	30	80	85	228,5	63,55	48	1,8	**042815** □

Sales unit consists of arbor with pull stud, clamping screw and conical spring washer (flat design), without spacers.

Spare parts:

BEZ	ABM mm	for d mm	ID
Washer with safety device against twisting, M10	20/35x13x10,5	20	**006768** ●
Washer with safety device against twisting, M16	30/45x15x16,5	30	**006769** ●
Locking nut with Balluff chip	SK 40, 511 Bytes		**081601** ●

Suitable spacers, see section Knives and Spare Parts.

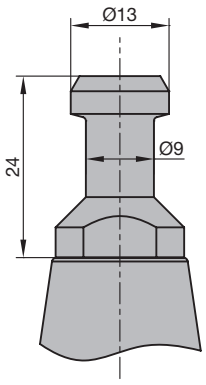

Type: A
SK 30 pull stud as per DIN ISO 7388

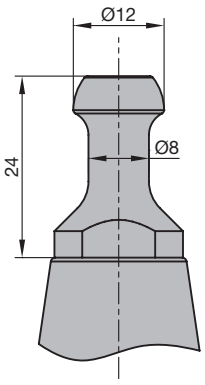

Type: B
SK 30/ISO 30 pull stud for HSD spindles from construction year 9/92 on

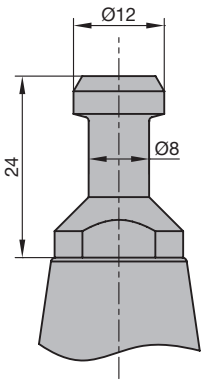

Type: C
SK 30/ISO 30 pull stud Biesse until construction year 9/92

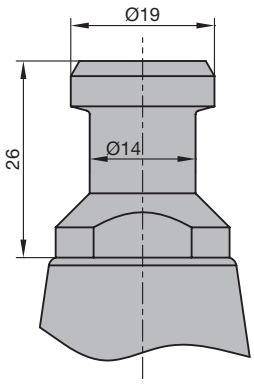

Type: E
SK 40 pull stud as per DIN ISO 7388

● available ex stock
□ available at short notice
Instruction manual visit www.leitz.org



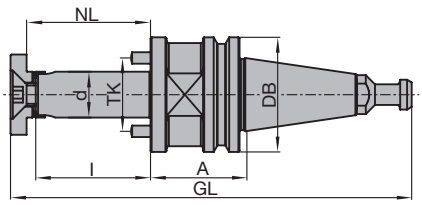

Arbor SK 30/SK 40

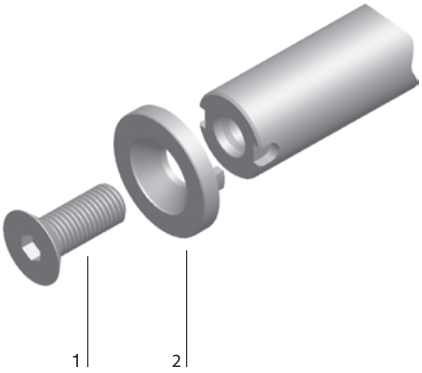

1 Clamping screw
2 Conical spring washer for safety against twisting

Cutter arbor with steep taper SK 30 / SK 40

Application:
Arbor for single tools with bore or tool sets with bore.

Technical information:
Steep taper design as per DIN ISO 7388, without grooves and notches. Outside dimension A = 63 mm for longer tool length in the machine. Safety device against tool twisting by screw or pin. Arbors are fine balanced. If conical spring washers with safety device against twisting are used, slots are required in the arbor. For suitable mounting device VN 799 0, see section Knives and Spare Parts.
Note: Please comply with the specifications regarding the maximum admissible weight and diameters detailed by the machine manufacturer!

SK 30, A = 63 mm
TI 501 0 01

Type	d mm	l mm	NL mm	GL mm	DB mm	TK mm	Weight kg	ID
A	20	70	74	215,8	50	32	1,3	**042818** □
A	30	80	85	226,8	50	48	1,6	**042822** □

SK 40, A = 63 mm
TI 501 0 01

Type	d mm	l mm	NL mm	GL mm	DB mm	TK mm	Weight kg	ID
E	30	80	85	249,5	63,55	48	2,2	**042829** □

Sales unit consists of arbor with pull stud, clamping screw and conical spring washer (flat design), without spacers.

Spare parts:

BEZ	ABM mm	for d mm	ID
Washer with safety device against twisting, M10	20/35x13x10,5	20	**006768** ●
Washer with safety device against twisting, M16	30/45x15x16,5	30	**006769** ●
Locking nut with Balluff chip	SK 40, 511 Bytes		**081601** ●

Suitable spacers, see section Knives and Spare Parts.

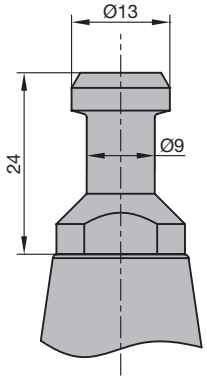

Type: A
SK 30 pull stud as per DIN ISO 7388

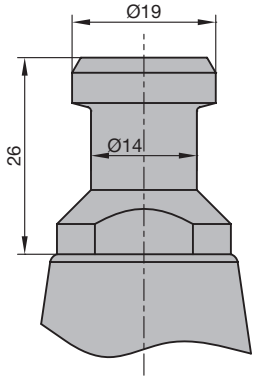

Type: E
SK 40 pull stud as per DIN ISO 7388

● available ex stock
□ available at short notice
Instruction manual visit www.leitz.org



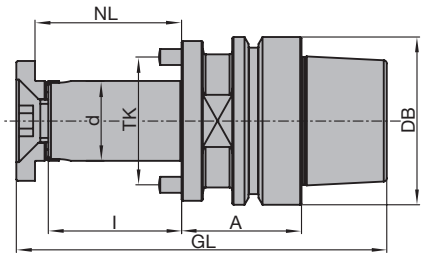

Arbor HSK-E 63

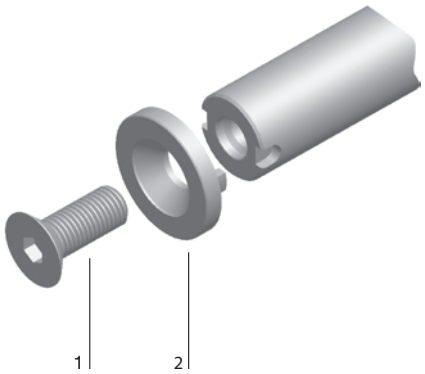

1 Clamping screw
2 Conical spring washer for safety against twisting

Cutting arbor with hollow taper shank HSK-E 63

Application:
Arbor for single tools with bore or tool sets with bore.

Technical information:
Hollow taper shank design as per DIN 69893. Safety device against tool twisting by screw or pin. Arbors are fine balanced. Spring washers with safety against twisting. For suitable mounting device VN 799 0, see section Knives and Spare Parts.
Note: Please comply with the specifications regarding the maximum admissible weight and diameters detailed by the machine manufacturer.

HSK-E 63, DIN 69893, A = 45 mm
TI 501 0 07

d mm	l mm	NL mm	GL mm	DB mm	TK mm	Weight kg	ID
20	70	75	159	63	32	1,2	**039801** ●
30	80	85	169	63	48	1,6	**039805** ●
30	140	145	229	63	48	1,9	**663071** ●
35	192	197	281	63	52	2,6	**039806** ●

Sales unit consisting of arbor, clamping screw and conical spring washer (flat design) with safety device against twisting, without spacers.

Spare parts:

BEZ	ABM mm	for d mm	ID
Washer with safety device against twisting, M10	20/35x13x10,5	20	**006768** ●
Washer with safety device against twisting, M16	30/45x15x16,5	30	**006769** ●
Washer with safety device against twisting, M16	35/50x15x16,5	35	**006770** ●
Chip-Balluff	511 Bytes		**081309** ●
Chip-Balluf	2047 Bytes		**081330** □

Suitable spacers, see section Knives and Spare Parts.



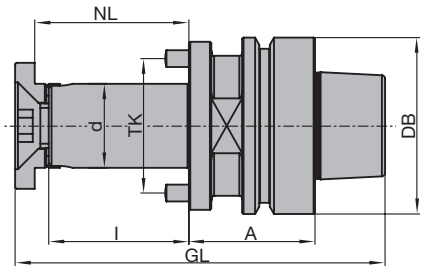

Arbor HSK-F 63

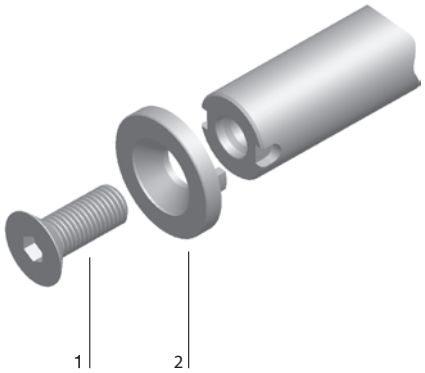

1 Clamping screw
2 Conical spring washer for safety against twisting

Cutting arbor with hollow taper shank HSK-F 63

Application:
Arbor for single tools with bore or tool sets with bore.

Technical information:
Hollow taper shank design as per DIN 69893. Safety device against tool twisting by screw or pin. Arbors are fine balanced. Spring washers with safety against twisting. For suitable mounting device VN 799 0, see section Knives and Spare Parts.
Note: Preferably use the short model for low vibration cutting. Please comply with the specifications regarding the maximum admissible weight and diameters detailed by the machine manufacturer.

HSK-F 63, DIN 69893, A = 45 mm
TI 501 0 07

d mm	l mm	NL mm	GL mm	DB mm	TK mm	Weight kg	ID
20	70	75	152	63	32	1,2	**042987** ●
30	80	85	162	63	48	1,6	**042988** ●
30	140	145	222	63	48	1,9	**041426** ●
35	192	197	274	63	52	2,6	**041425** ●

HSK-F 63, DIN 69893, A = 80 mm
TI 501 0 07

d mm	l mm	NL mm	GL mm	DB mm	TK mm	Weight kg	ID
20	70	75	187	63	32	1,7	**042847** ●
30	80	85	197	63	48	2,1	**042951** ●
30	120	125	237	63	48	2,4	**041427** ●

HSK-F 63, DIN 69893, A = 90 mm
TI 501 0 07

d mm	l mm	NL mm	GL mm	DB mm	TK mm	Weight kg	ID
35	170	175	297	63	52	3,2	**041428** ●

Sales unit consisting of arbor, clamping screw and conical spring washer (flat design) with safety device against twisting, without spacers.

Spare parts:

BEZ	ABM mm	for d mm	ID
Washer with safety device against twisting, M10	20/35x13x10,5	20	**006768** ●
Washer with safety device against twisting, M16	30/45x15x16,5	30	**006769** ●
Washer with safety device against twisting, M16	35/50x15x16,5	35	**006770** ●
Chip-Balluff	511 Bytes		**081309** ●
Chip-Balluf	2047 Bytes		**081330** □

Suitable spacers, see section Knives and Spare Parts.

● available ex stock
□ available at short notice
Instruction manual visit www.leitz.org



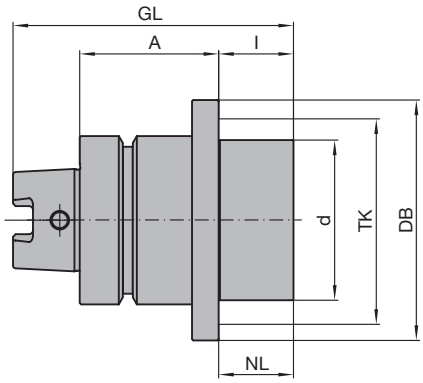

Arbors HSK-F 63 mod. (ID **663052**) with flange

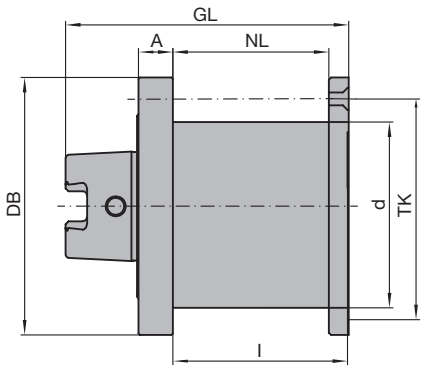

Arbor HSK-F 63 mod. (ID **663053**) with end ring and clamping screws

Cutting arbor with hollow taper shank HSK-F 63 mod.

Application:
Arbors for single tools with bore or tool sets with bore. For precise clamping in the machine spindle and quick tool change, mainly on Homag through feed machines with HSK-F 63 mod. motor spindle.

Machine:
Double-end tenoner, flooring machines, edgebanding machines etc.

Technical information:
Fine balanced arbors with hollow shank taper modified design as per DIN 69893 HSK-F 63. Precise tool clamping for high concentricity. Clamping screws and end ring are part of the arbor.

HSK-F 63 mod., A = 12.5 mm and 52 mm
TB 300 0

Machine	d mm	l mm	NL mm	A mm	GL mm	DB mm	TK mm	Weight kg	ID
Homag	60	28	28	52	105	63	75	2,1	**663052** ●
Homag	60	59,5	54,5	12,5	99	63	75	2,2	**663053** ●

Spare parts:

BEZ	ABM mm	ID
Cylindrical screw with ISK	M6x30	**005928** ●
Cylindrical screw with ISK	M6x65	**005935** ●
Allen key	SW 5	**005452** ●



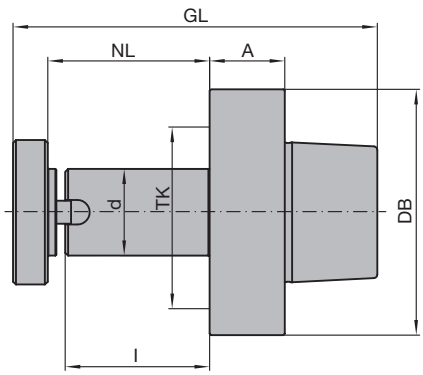

Cutting arbor HSK 85 WS with clamping spacer and safety device against twisting

Cutting arbor with hollow shank taper HSK 85 WS

Application:
For mounting saws, cutting tools, sets of cutting tools and cutterheads.

Machine:
Machines with HSK 85 WS adaptor e.g. moulders (Weinig Powermat), window production machines etc.

Technical information:
Easy and safe handling with optional lifting rings.

HSK 85 WS, A = 26 mm, for Weinig Powermat without safety device against twisting
TI 501 0 14

Machine	d mm	l mm	NL mm	GL mm	DB mm	TK mm	Weight kg	ID
Weinig	30	50	55	125	85	48	1,7	**663101** ●
Weinig	30	80	85	155	85	48	1,9	**663102** ●
Weinig	30	105	110	180	85	48	2,0	**663103** ●
Weinig	40	80	85	155	85		2,3	**663075** ●
Weinig	40	100	105	175	85		2,5	**663083** □
Weinig	40	130	135	205	85		2,8	**663077** ●
Weinig	40	145	150	220	85		3,0	**663084** □
Weinig	40	165	170	240	85		3,3	**663078** ●
Weinig	40	205	210	280	85		3,6	**663085** □
Weinig	40	235	240	310	85		4,2	**663079** ●
Weinig	50	80	85	155	85		2,9	**663076** ●
Weinig	50	100	105	175	85		3,2	**663086** □
Weinig	50	130	135	205	85		3,7	**663080** ●
Weinig	50	145	150	220	85		3,9	**663087** □
Weinig	50	165	170	240	85		4,7	**663081** ●
Weinig	50	205	210	280	85		4,8	**663088** □
Weinig	50	235	240	310	85		5,3	**663082** ●

Spare parts:

BEZ	ABM mm	for d mm	ID
Washer with safety device against twisting	50/20	30	**008376** ●
Washer with safety device against twisting	60/20	40	**008368** ●
Washer with safety device against twisting	70/20	50	**008369** ●
Cylindrical screw with ISK	M8x20	40/50	**114048** ●

● available ex stock
□ available at short notice
Instruction manual visit www.leitz.org



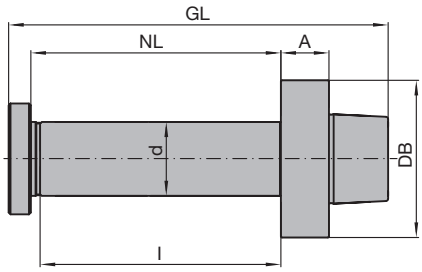

Cutting arbor HSK 85 WS with clamping spacer and safety device against twisting in HSK.

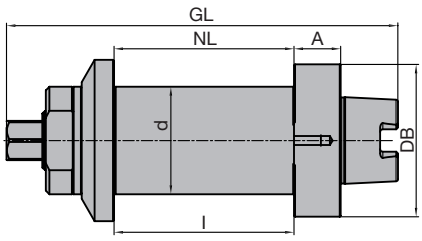

ID **663051**

Cutting arbor with hollow shank taper HSK 85 WS

Application:
For mounting saws, cutting tools, sets of cutting tools and cutterheads.

Machine:
Machines with HSK 85 WS adaptor e.g. moulders (Weinig Powermat), window production machines etc.

Technical information:
Easy and safe handling with optional lifting rings.

HSK 85 WS, A = 26 mm, for Weinig Powermat with two safety device grooves against twisting in the HSK
TI 501 0 14, TI 501 0 16

Machine	d mm	l mm	NL mm	GL mm	DB mm	Weight kg	ID
Weinig	40	165	170	240	85	3,2	**663104** □
Weinig	40	235	240	310	85	3,9	**663105** □
Weinig	60	100,5	100,5	218,5	85	4,2	**663051** ●

Spare parts:

BEZ	ABM mm	for d mm	ID
Washer with safety device against twisting	60/20	40	**008370** ●
Washer with safety device against twisting	90/18	60	**008379** ●
Cylindrical screw with ISK	M8x20	40/60	**114048** ●



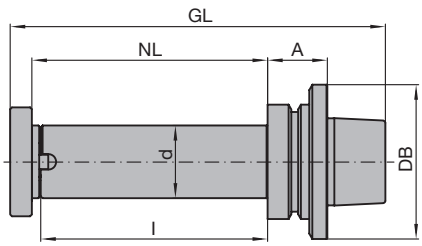

Cutting arbor HSK 85 - TI 501 0 14

Cutting arbor with hollow shank taper HSK 85

Application:
For mounting saws, cutting tools, sets of cutting tools and cutterheads.

Machine:
Machines with HSK 85 WS adaptor e.g. moulders, window production machines etc.

Technical information:
Easy and safe handling with optional lifting rings.

HSK 85, A = 33 mm and A = 26 mm, for SCM
TI 501 0 14

Machine	d mm	l mm	NL mm	GL mm	DB mm	Weight kg	ID
SCM	40	125	130	207	85	2,6	**663061** ●
SCM	50	325	320	413	85	7,3	**663055** ●

Spare parts:

BEZ	ABM mm	for d mm	ID
Washer with safety device against twisting	60/20		**008368** ●
Washer with safety device against twisting	70/20	50	**008375** ●
Cylindrical screw with ISK	M8x20	40	**114048** ●
Cylindrical screw with ISK	M8x35	50	**006524** ●



Blanking arbor HSK 85 WS

Application:
Dust cover for spindles when not in use.

Machine:
Machines with HSK 85 WS adaptor e.g. moulders (Weinig Powermat), window production machines etc.

Blanking arbor for Weinig Powermat
TI 501 0 14

Machine	ID
Weinig	**663044** ●

● available ex stock
□ available at short notice
Instruction manual visit www.leitz.org



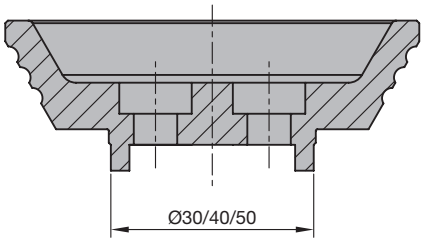

ID **008378/ 008365 / 008366**

Lifting ring, HSK 85 WS

Application:
Lifting rings can be mounted on arbors for easy and safe tool handling.

Lifting ring for HSK 85 WS arbors
TK 540 0

Machine	BEZ	ABM mm	TK mm	ID
Weinig	Spindle lifting rings	for d=30 with safety device against twisting	18	**008378** ●
Weinig	Spindle lifting rings	for d=40 with safety device against twisting	25	**008365** ●
Weinig	Spindle lifting rings	for d=50 with safety device against twisting	32	**008366** ●

Application

Clamping and mounting of circular sawblades.

Machines

Stationary routers with CNC control and spindles for automatic tool change.
Milling machines with cutting spindles for automatic tool change.

Technical features

Circular sawblade adaptors are used to mount sawblades on CNC machining centres or through feed machines with automatic tool change tool spindles.
- Design without flange suitable for deep mitre cuts on 5-axis CNC machining centres.
- Design with clamping flange for precise cuts and multi purpose applications.
- Multi-purpose design for variable applications on all arbors with diameter d = 30 mm.



Sawblade mounting flange with HSK-F 63 adaptor.

Allowed bore tolerances

Circular sawblades mounted on sawblade flanges have to have the following bore tolerances:

	Bore tolerance
Circular sawblade for sawblade flange	ISO H7



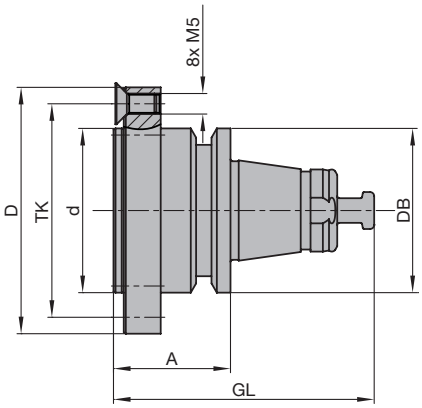

Saw blade adaptor

Tool adaptor for circular sawblades for CNC aggregates

Application:
Tool adaptor with flange for the adaption of circular sawblades.

Technical information:
Steep taper design for Flex 5+ aggregate (Homag Group) and 5-motion-Plus aggregate (Felder Format-4). The circular sawblade is fixed through 8 countersink screws M5 on the flange. Maximum sawblade diameter 220 mm (limitation through the aggregate). The maximum cutting width of sawblade is limited to 6 mm. Tool adaptor is fine balanced.

Sawblade adaptor
TI 501 0

Machine	d mm	l mm	NL mm	A mm	GL mm	DB mm	TK mm	Weight kg	ID
Felder Format-4, Homag Group	40	2,5	2,5 - 4	23,5	62,5	40	52	0,4	**663074** ●

Spare parts:

BEZ	ABM mm	ID
Countersink screw, Torx® 20	M5x12	**006247** ●
Torx® key	Torx® 20	**117511** ●



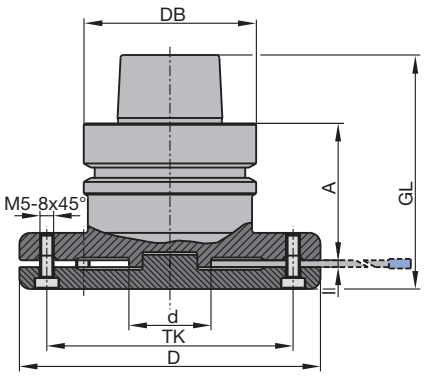

Clamping variant with counter flange

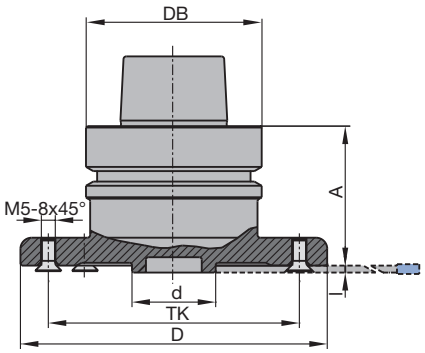

Clamping variant with concentrically mounted sawblade

Tool adaptor for circular sawblades

Application:
Tool adaptor with flange for the adaption of circular sawblades.

Technical information:
Optionally mounting the sawblade by means of counterscrews or with the enclosed counterflange. Mounting with counterflange is preferred for increased stability and concentricity in case of precision cuts. Application without counterflange is preferred for producing mitre and rafter cuts. Maximum diameter of sawblade 350 mm (450 mm with counter flange).

HSK-F 63, DIN 69893
TI 501 0 07

Machine	d mm	l mm	NL mm	A mm	GL mm	DB mm	TK mm	Weight kg	ID
Homag	30	2,5	2,5 - 3,5	40	75,5	63	90	2,0	**663094** ●
	30	2,5	2,5 - 3,5	50	85,5	63	90	2,2	**663093** ●
SCM	30	2,5	2,5 - 3,5	60	95,5	63	90	2,5	**663109** ●

Sales unit consisting of HSK-flange with counterscrews as well as counterflange with cylindrical screws.

Spare parts:

BEZ	ABM mm	ID
Cylindrical screw with ISK	M5x12	**006414** ●
Countersink screw, Torx® 20	M5x8.5	**007808** ●
Allen key	SW 4, L 71	**005468** ●
Torx® key	Torx® 20	**117511** ●

● available ex stock
□ available at short notice
Instruction manual visit www.leitz.org



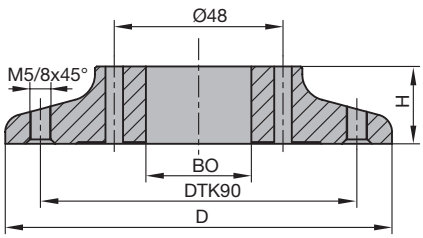

Flange TR 810 0

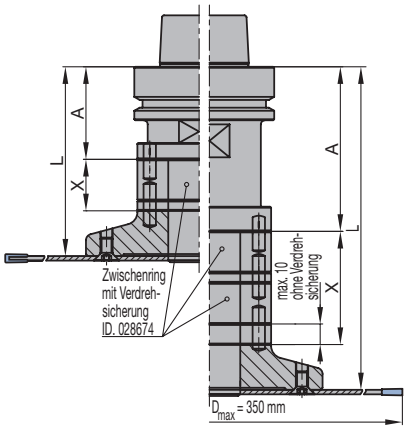

Note:
Variable clamping length through the combination of spacers without pins and spacers with pins for the safety device against twisting ID **028674**. Maximal thickness of the spacers without safety device against twisting = 10 mm.

Flange for circular sawblades

Application:
To mount circular sawblades on arbors.

Technical information:
Sawblade flange is mounted on arbor with diameter d = 30 mm by clamping screws and pins. The length and the dimension A are flexible and defined by spacers. Maximum sawblade diameter 350 mm.

Flange adaptor
TR 810 0

Machine	D mm	H mm	BO mm	NL mm	TK mm	Weight kg	ID
Universal	110	22	30	2 - 3,5	90	0,9	**066752** ●

Spare parts:

BEZ	ABM mm	ID
Countersink screw, Torx® 20	M5x12	**006247** ●
Torx® key	Torx® 20	**117511** ●
Spacer with cylindrical pins	60x20x30	**028674** ●

Suitable spacers, see section Knives and Spare Parts.

Clamping length L depending on spacer thickness X and the dimension A of the arbor used:

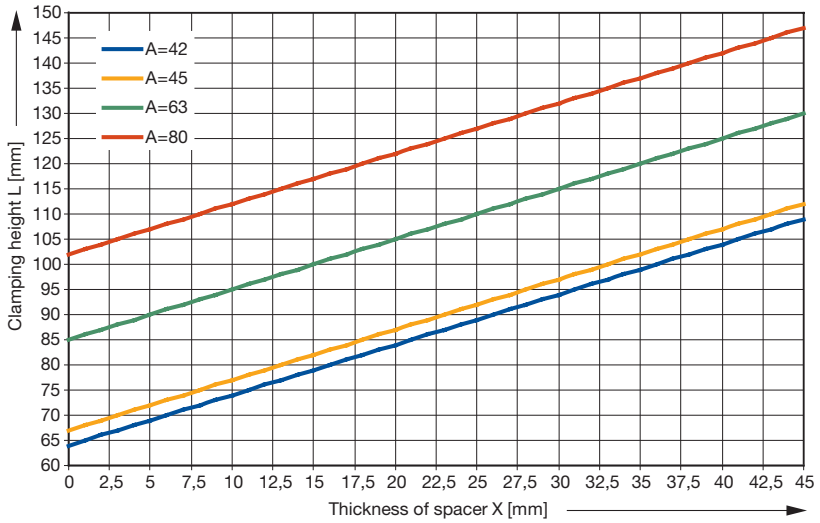

Key to pictograms



Spindle without
twist protection



Spindle with
anti-twist keyway



Spindle with
anti-twist hexagon



Hydro clamping
system - open



Hydro clamping
system - closed



Hydro-Duo
(bi-directio-nal) clamping



Hydro clamping arbors



Hydro clamping

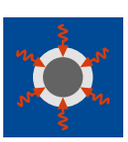

Shrink-fit clamping



Quick clamping system

www.leitz.org

SDZ/MA 02/2025 Subject to changes prior to technical developments. © Leitz GmbH & Co. KG

Knives and spare parts

Leitz Lexicon Edition 7 | Version 2 | 01/2025

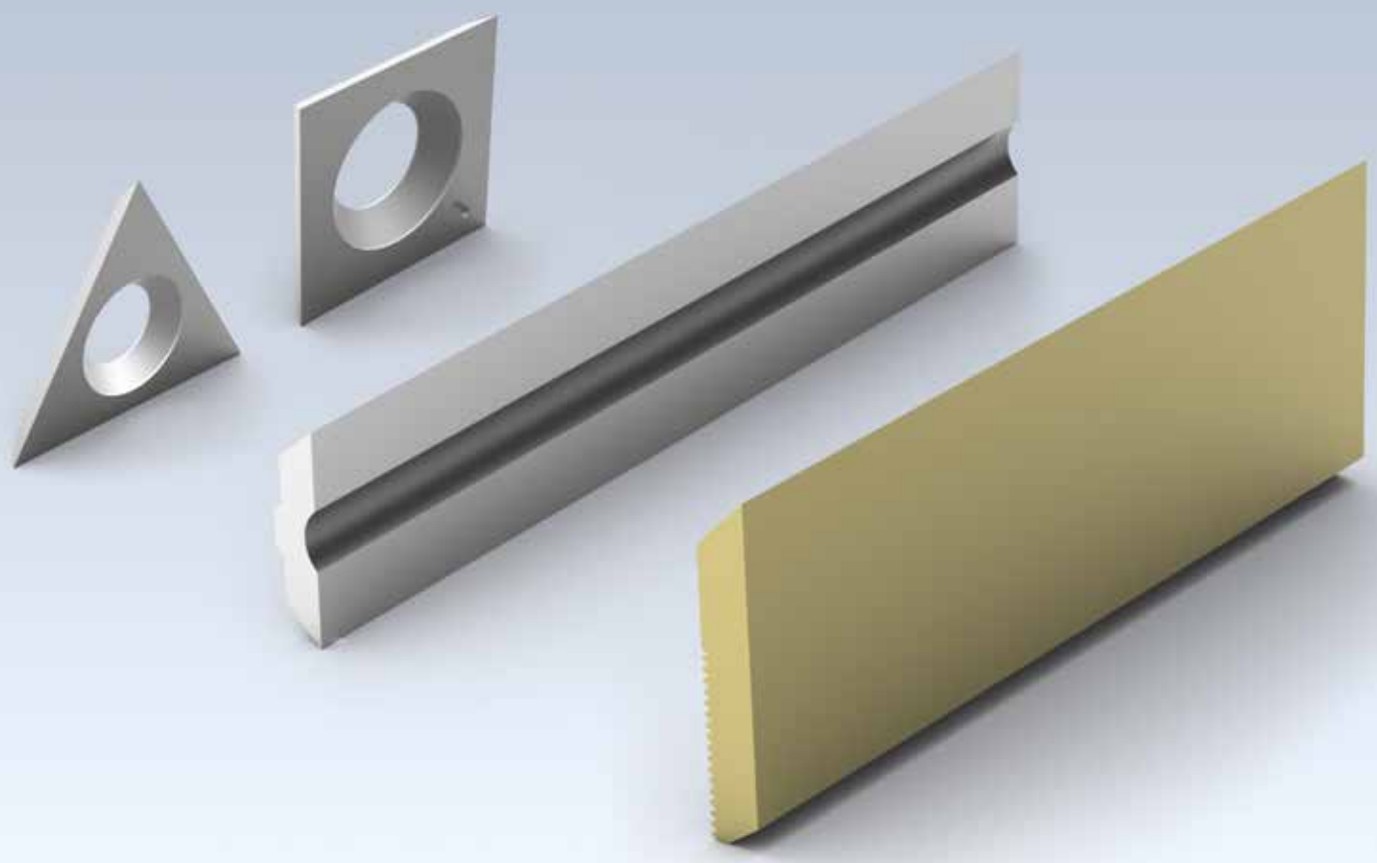

Explanation of abbreviations

A	=	dimension A
a_e	=	cutting thickness (radial)
a_p	=	cutting depth (axial)
ABM	=	dimension
APL	=	panel raising length
APT	=	panel raising depth
AL	=	working length
AM	=	number of knives
AS	=	anti sound (low noise design)
b	=	overhang
B	=	width
BDD	=	thickness of shoulder
BEM	=	note
BEZ	=	description
BH	=	tipping height
BO	=	bore diameter
CNC	=	Computerized Numerical Control
d	=	diameter
D	=	cutting circle diameter
D0	=	zero diameter
DA	=	outside Diameter
DB	=	diameter of shoulder
DFC	=	Dust Flow Control (optimised chip clearance)
DGL	=	number of links
DIK	=	thickness
DKN	=	double keyway
DP	=	polycrystalline diamond
DRI	=	rotation
FAB	=	width of rebate
FAT	=	depth of rebate
FAW	=	bevel angle
FLD	=	flange diameter
f_z	=	tooth feed
$f_{z\ eff}$	=	effective tooth feed
GEW	=	thread
GL	=	total length
GS	=	Plunging edge
H	=	height
HC	=	tungsten carbide, coated
HD	=	wood thickness (thickness of workpiece)
HL	=	high-alloyed tool steel
HS	=	high-speed steel (HSS)
HW	=	tungsten carbide (TCT)
ID	=	ident number
IV	=	insulation glazing
KBZ	=	abbreviation
KLH	=	clamping height
KM	=	edge breaker
KN	=	single keyway
KNL	=	combination pinhole consists of 2/7/42 2/9/46,35 2/10/60
L	=	length
l	=	clamping length
LD	=	left hand twist
LEN	=	Leitz standard profiles
LH	=	left hand rotation
M	=	metric thread
MBM	=	minimum order quantity
MC	=	multi-purpose steel, coated
MD	=	thickness of knife
min^{-1}	=	revolutions per minute (RPM)
MK	=	morse taper
m min^{-1}	=	metres per minute
m s^{-1}	=	metres per second
n	=	RPM
$n_{max.}$	=	maximum permissible RPM
NAL	=	position of hub
ND	=	thickness of hub
NH	=	zero height
NL	=	cutting length
NLA	=	pinhole dimensions
NT	=	grooving depth
P	=	profile
POS	=	cutter position
PT	=	profile depth
PG	=	profile group
QAL	=	cutting material quality
R	=	radius
RD	=	right hand twist
RH	=	right hand rotation
RP	=	radius of cutter
S	=	shank dimension
SB	=	cutting width
SET	=	set
SLB	=	slotting width
SLL	=	slotting length
SLT	=	slotting depth
SP	=	tool steel
ST	=	Cobalt-basis cast alloys, e.g. Stellite™
STO	=	shank tolerance
SW	=	cutting angle
TD	=	diameter of tool body
TDI	=	thickness of tool
TG	=	pitch
TK	=	reference diameter
UT	=	cutting edges with irregular pitch
V	=	number of spurs
v_c	=	cutting speed
v_f	=	feed speed
VE	=	packing unit
VSB	=	adjustment range
WSS	=	workpiece material
Z	=	number of teeth
ZA	=	number of fingers
ZF	=	tooth shape (cutting edge shape)
ZL	=	finger length

Notes to the Lexicon concerning the diagrams and tables

The statements made in the diagrams and tables relate to specific conditions and represent parameters from tests subjected to defined conditions. Variations when using tools in individual case due to special application conditions may be possible. Our support team will provide you with detailed information.

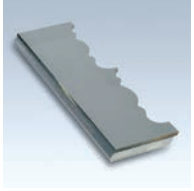

8. Knives and spare parts

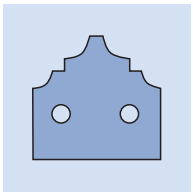

8.1. Knives and blank knives 2
8.1.1 Turnblade knives 2
8.1.2 Spurs 9
8.1.3 Grooving knives / profile grooving knives 10
8.1.4 Edging knives 12
8.1.5 Planer knives 14
8.1.6 Blank knives 26
8.1.7 Profile knives 29
8.1.8 For portable planers and semi-stationary machines 32

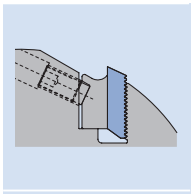

8.2. Spare parts and clamping parts 33
8.2.1 For planer / profile cutterheads 33

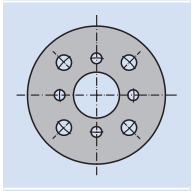

8.3. Spacers 34

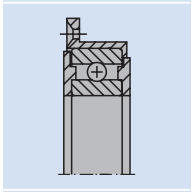

8.4. Ball bearings and guide rings 39

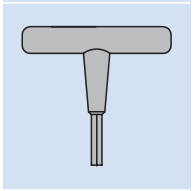

8.5. Keys 40

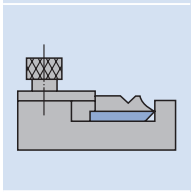

8.6. Setting gauges / mounting devices 42

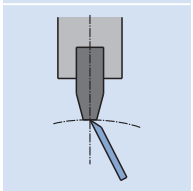

8.7. Jointing stones 45

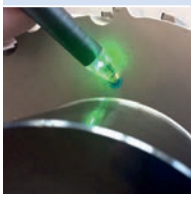

8.8. Equipment for tools with data chips 46

Alphabetical product index 47

ID index 48

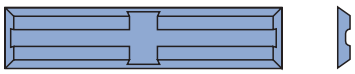

Turnblade knife for router cutter WL 100 1

Workpiece material:
Softwood and hardwood

Cutting material:
HW

Knife height up to 5.5 mm

HW-05
TM 410 0

SB mm	H mm	DIK mm	KBZ	QAL	VE PCS	ID
20	4,1	1,1	WL 100-1	HW-05	10	**005186** ●
20	5,5	1,1	WL 100-1	HW-05	10	**005187** ●
25	5,5	1,1	WL 100-1	HW-05	10	**005188** ●
30	5,5	1,1	WL 100-1	HW-05	10	**005189** ●
40	5,5	1,1	WL 100-1	HW-05	10	**005190** ●
50	5,5	1,1	WL 100-1	HW-05	10	**005191** ●

ID = 1 piece.

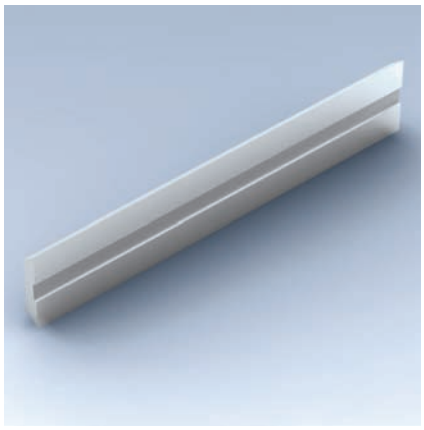

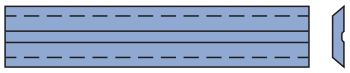

Turnblade knife HW

Cutting material recommendation	HW-30F	HW-05
Softwood	♦	◇
Hardwood	◇	♦
Glulam	◇	♦
Chipboard	◇	♦
MDF	◇	♦
Thermoplastics (PE, PP, PVC, etc.)	◇	♦

♦ suitable ◇ partly suitable

Cutting material:
HW fine grain quality/ HW

Knife height 8 mm

HW-30F / HW-05
TM 410 0

SB mm	H mm	DIK mm	VE PCS	ID HW-05	ID HW-30F
7,7	8	1,5	10	**005053** ●	**005068** ●
9,7	8	1,5	10	**005054** ●	**005197** ●
11,7	8	1,5	10	**005055** ●	**005069** ●
14,7	8	1,5	10	**005056** ●	**005070** ●
19,7	8	1,5	10	**005057** ●	**005071** ●
25	8	1,5	10	**005058** ●	**005198** ●
30	8	1,5	10	**005059** ●	**005072** ●
35	8	1,5	10	**005400** ●	**005073** ●
40	8	1,5	10	**005401** ●	**005074** ●
45	8	1,5		**007681** ●	**007679** □
50	8	1,5	10	**005402** ●	**005075** ●
60	8	1,5	10	**005403** ●	**005076** ●
70	8	1,5		**007682** ●	**007680** □
80	8	1,5	10		**005077** ●
80	8	1,5		**005404** ●	
100	8	1,5		**005405** ●	**005184** ●
120	8	1,5		**005406** ●	**005185** ●

ID = 1 piece.

● available ex stock
□ available at short notice
Instruction manual visit www.leitz.org



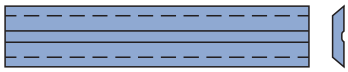

Turnblade knife HW

Cutting material recommendation	HW-30F MC	HW-30F MC Micro
Softwood	♦	♦
Hardwood	◇	♦
Glulam	◇	◇
Chipboard		
MDF		
Thermoplastics (PE, PP, PVC, etc.)	◇	◇
	HW-05 MC	TDC
Softwood	◇	◇
Hardwood	♦	◇
Glulam	♦	♦
Chipboard	♦	♦
MDF	♦	♦
Thermoplastics (PE, PP, PVC, etc.)	♦	♦

♦ suitable ◇ partly suitable

Coating:
Marathon MC (Multi Coating) / Marathon TDC (Tungsten Diamond Coating)

Attention:
HW-30F MC cutting edges with micro-finish for high demands on finish quality and cutting performance

Knife height 8 mm Marathon

HW-30F MC / HW-30F MC Micro / HW-05 MC / HW TDC
TM 410 0, TM 410 0 50, TM 410 0 70

SB mm	H mm	DIK mm	VE PCS	ID HW-30F MC	ID HW-30F MC Micro	ID HW-05 MC	ID HW TDC
7,7	8	1,5	10	**601600** ●	**601704** ●	**601628** ●	**601416**
9,7	8	1,5	10	**601601** ●	**601705** ●	**601629** ●	**601417**
11,7	8	1,5	10	**601602** ●	**601706** ●	**601630** ●	**601418**
14,7	8	1,5	10	**601603** ●	**601707** ●	**601631** ●	**601419**
19,7	8	1,5	10	**601604** ●	**601708** ●	**601632** ●	**601420**
25	8	1,5	10	**601605** ●	**601709** ●	**601633** ●	**601421**
30	8	1,5	10	**601606** ●	**601710** ●	**601634** ●	**601422**
35	8	1,5	10	**601607** ●	**601711** ●	**601635** ●	**601423**
40	8	1,5	10	**601608** ●	**601712** ●	**601636** ●	**601424**
45	8	1,5	1	**601609** □	**601713** □	**601637** ●	**601425**
50	8	1,5	1		**601714** ●		
50	8	1,5	10	**601610** ●		**601638** ●	**601426**
60	8	1,5	1		**601715** ●		
60	8	1,5	10	**601611** ●		**601639** ●	**601427**
70	8	1,5	1	**601612** □	**601716** □	**601640** ●	**601428**
80	8	1,5	1		**601717** ●	**601641** ●	
80	8	1,5	10	**601613** ●			**601429**
100	8	1,5	1	**601614** ●	**601718** ●	**601642** ●	**601430**
120	8	1,5	1	**601615** ●	**601719** ●	**601643** ●	**601431**

ID = 1 piece.

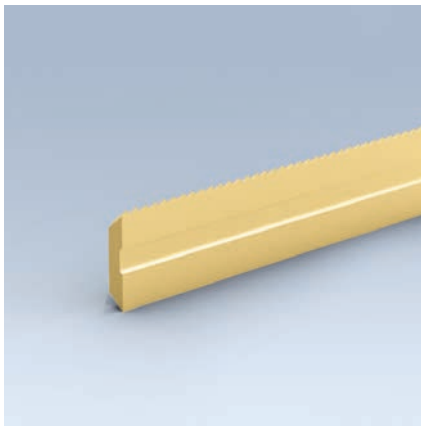



One-way knife HW



Workpiece material:
Softwood and hardwood

Cutting material:
HW fine grain quality (HW 30F)
HW (HW-05)

Coating:
Marathon MC (Multi Coating)

RipTec:
Cutting edges with RipTec profile for high surface quality and cutting performance

Changeable knife 8 mm Marathon RipTec for turnblade knife tools Integral

HW-30F MC RipTec
TM 140 0 08

SB mm	H mm	DIK mm	KBZ	QAL	VE PCS	ID
8	8	1,5	EPR 8/8-MC	HW-30F MC	2	**601744**
10	8	1,5	EPR 8/10-MC	HW-30F MC	2	**601745**
12	8	1,5	EPR 8/12-MC	HW-30F MC	2	**601746**
14	8	1,5	EPR 8/15-MC	HW-30F MC	2	**601747**
20	8	1,5	EPR 8/20-MC	HW-30F MC	2	**601748**
24	8	1,5	EPR 8/25-MC	HW-30F MC	2	**601749**
29	8	1,5	EPR 8/30-MC	HW-30F MC	2	**601750**
34	8	1,5	EPR 8/35-MC	HW-30F MC	2	**601751**
39	8	1,5	EPR 8/40-MC	HW-30F MC	2	**601752**
44	8	1,5	EPR 8/45-MC	HW-30F MC	2	**601753**
49	8	1,5	EPR 8/50-MC	HW-30F MC	2	**601754**
59	8	1,5	EPR 8/60-MC	HW-30F MC	2	**601755**
69	8	1,5	EPR 8/70-MC	HW-30F MC	2	**601756**
78	8	1,5	EPR 8/80-MC	HW-30F MC	2	**601757**
98	8	1,5	EPR 8/100-MC	HW-30F MC	2	**601758**
118	8	1,5	EPR 8/120-MC	HW-30F MC	2	**601759**

ID = 1 piece.

HW-05 MC RipTec
TM 140 0 08

SB mm	H mm	DIK mm	KBZ	QAL	VE PCS	ID
8	8	1,5	EPR 8/8B-MC	HW-05 MC	2	**601760**
10	8	1,5	EPR 8/10B-MC	HW-05 MC	2	**601761**
12	8	1,5	EPR 8/12B-MC	HW-05 MC	2	**601762**
14	8	1,5	EPR 8/15B-MC	HW-05 MC	2	**601763**
20	8	1,5	EPR 8/20B-MC	HW-05 MC	2	**601764**
24	8	1,5	EPR 8/25B-MC	HW-05 MC	2	**601765**
29	8	1,5	EPR 8/30B-MC	HW-05 MC	2	**601766**
34	8	1,5	EPR 8/35B-MC	HW-05 MC	2	**601767**
39	8	1,5	EPR 8/40B-MC	HW-05 MC	2	**601768**
44	8	1,5	EPR 8/45B-MC	HW-05 MC	2	**601769**
49	8	1,5	EPR 8/50B-MC	HW-05 MC	2	**601770**
59	8	1,5	EPR 8/60B-MC	HW-05 MC	2	**601771**
69	8	1,5	EPR 8/70B-MC	HW-05 MC	2	**601772**
78	8	1,5	EPR 8/80B-MC	HW-05 MC	2	**601773**
98	8	1,5	EPR 8/100B-MC	HW-05 MC	2	**601774**
118	8	1,5	EPR 8/120B-MC	HW-05 MC	2	**601775**

ID = 1 piece.

● available ex stock
□ available at short notice
Instruction manual visit www.leitz.org

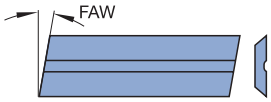

Turnblade knife ZM 10/x



Turnblade knife ZM 11/x

Workpiece material:
Softwood and hardwood

Cutting material:
HW fine grain quality

Knife height 8 mm (bevel/tenoning tools)

HW-30F
TM 410 0

SB mm	H mm	DIK mm	FAW °	KBZ	QAL	ID
15	8	1,5	14°	ZM 10/4	HW-30F	**005050** ●
15	8	1,5	14°	ZM 11/4	HW-30F	**005051** ●
21	8	1,5	10°	ZM 10/1	HW-30F	**005004** ●
21	8	1,5	10°	ZM 11/1	HW-30F	**005006** ●

ID = 1 piece.



Turnblade knife ZM 10/x

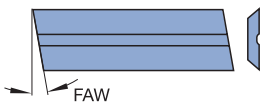

Turnblade knife ZM 11/x

Cutting material recommendation	HW-30F MC	HW-05 MC
Softwood	♦	◇
Hardwood	◇	♦
Glulam	◇	♦
Chipboard		♦
MDF		♦
Thermoplastics (PE, PP, PVC, etc.)	◇	♦

♦ suitable ◇ partly suitable

Coating:
Marathon MC (Multi Coating)

Knife height 8 mm Marathon (bevel/tenoning tools)

HW-30F MC / HW-05 MC
TM 410 0 50

SB mm	H mm	DIK mm	FAW °	KBZ	ID HW-05 MC	ID HW-30F MC
15	8	1,5	8°	ZM 10/5	**601645** ●	**601617** ●
15	8	1,5	8°	ZM 11/5	**601644** ●	**601616** ●
15	8	1,5	14°	ZM 10/4	**601647** ●	**601619** ●
15	8	1,5	14°	ZM 11/4	**601646** ●	**601618** ●
21	8	1,5	10°	ZM 10/1	**601649** ●	**601621** ●
21	8	1,5	10°	ZM 11/1	**601648** ●	**601620** ●

ID = 1 piece.

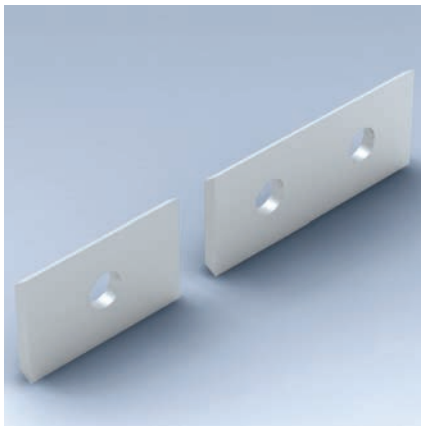

Knife type:
Type 1 Type 2

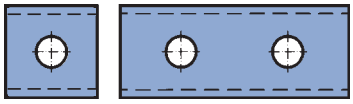

Turnblade knife

Cutting material recommendation	HW-05F	HW-02 UF	TDC
Softwood	♦	◇	◇
Hardwood	♦	♦	◇
Glulam	◇	♦	♦
Chipboard	◇	♦	♦
MDF	◇	♦	♦
Thermoplastics (PE, PP, PVC, etc.)	◇	♦	♦

♦ suitable ◇ partly suitable

Knife height 12 mm

HW-05F / HW-02UF / TDC
TM 405 0

Knife	SB mm	H mm	DIK mm	VE PCS	ID HW-02UF	ID HW-05F	ID TDC
1	7,6	12	1,5	10		**005080** ●	**602414**
1	9	12	1,5	10		**005158** ●	**602415**
1 *	12	12	1,5	10		**005081** ●	**602416** ●
1	15	12	1,5	10		**005082** ●	**602417**
1	20	12	1,5	10	**602001** ●	**005083** ●	**602418**
2	30	12	1,5	10	**602002** ●	**005084** ●	**602419** ●
2	40	12	1,5	10	**602003** ●	**005085** ●	**602420**
2	50	12	1,5	10	**602004** ●	**005086** ●	**602421** ●
2	60	12	1,5	10		**005087** ●	**602422**

ID = 1 piece.
* = with 4 cutting edges.

Cutting material:
HW / HW ultra fine grain quality

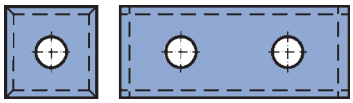

Turnblade knife with 4 cutting edges

Cutting material recommendation	HW-05F	HW-02 UF
Softwood	♦	◇
Hardwood	♦	♦
Glulam	◇	♦
Chipboard	◇	♦
MDF	◇	♦
Thermoplastics (PE, PP, PVC, etc.)	◇	♦

♦ suitable ◇ partly suitable

Cutting material:
HW / HW ultra fine grain quality

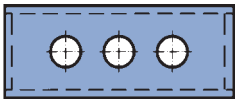

Turnblade knife with 4 cutting edges and 3 holes

Knife height 12 mm with 4 cutting edges

HW-05F / HW-02UF
TM 405 0

SB mm	H mm	DIK mm	VE PCS	ID HW-02UF	ID HW-05F
30	12	1,5	10	**602005** ●	**005161** ●
50	12	1,5	10	**602006** ●	**006506** ●

ID = 1 piece.

HW-05F with 3 holes
TM 405 0

SB mm	H mm	DIK mm	QAL	VE PCS	ID
50	12	1,7	HW-05F	10	**007668** ●

ID = 1 piece.

● available ex stock
□ available at short notice
Instruction manual visit www.leitz.org



Turnblade knife

Workpiece material:
Softwood and hardwood

Cutting material:
HW

Knife height 12 mm (slotting tools)

HW
TM 405 0

SB mm	H mm	DIK mm	KBZ	QAL	ID
7,6	12	1,5	SM 1/1	HW	**005120** ●
9,6	12	1,5	SM 1/2	HW	**005121** ●
11,6	12	1,5	SM 1/3	HW	**005122** ●

Knife type:
Type 1 Type 2

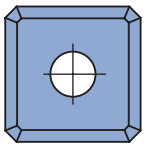

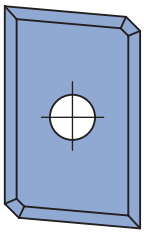

Turnblade knife

Workpiece material:
Softwood and hardwood

Cutting material:
HW

Knife height 12 mm with bevel

HW
TM 405 0

Knife	SB mm	H mm	DIK mm	FAW °	QAL	ID
1	12	12	1,5	1x45°	HW	**602009** ●
2	19,7	12	1,5	5°	HW	**602010** ●

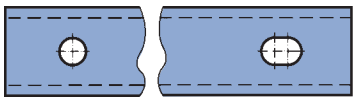

Turnblade knife

Workpiece material:
Softwood and hardwood

Cutting material:
HW

Knife height 13 mm

HW
TM 405 0

SB mm	H mm	DIK mm	QAL	VE PCS	ID
80	13	2,2	HW	10	**005096** ●
100	13	2,2	HW	10	**005097** ●
120	13	2,2	HW	10	**005098** ●

ID = 1 piece.

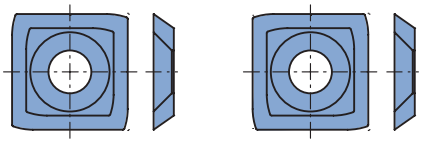

Workpiece material:
Softwood and hardwood

Cutting material:
HW / HW fine grain quality

Turnblade knife with radius for calibration moulder System Rotoles

HW
TM 435 0

SB mm	H mm	DIK mm	QAL	VE PCS	ID left	ID right
14,3	14,3	2,5	HW	10	**602525** ●	**602526** ●
14	14	2	HW-10F	10	**602527** ●	**602528** ●

ID = 1 piece.

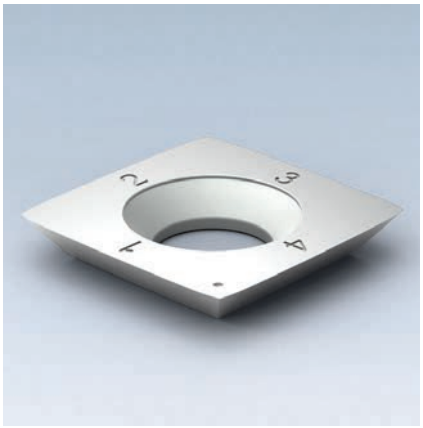

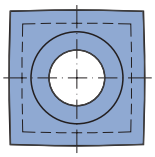

HW turnblade knife

Workpiece material:
Softwood and hardwood

Cutting material:
HW / TDC

Turnblade knives for cutterhead system HeliCut

HW / TDC
TM 135 0, TM 405 0, TM 435 0

BEM	SB mm	H mm	DIK mm	QAL	VE PCS	ID
HeliCut 15	15	15	2,5	HW	10	**009549** ●
HeliCut 15	15	15	2,5	HW-MF	10	**009543** ●
HeliCut 15	15	15	2,5	TDC		**602900** ●
HeliCut 11 (peripheral tip)	11	11	1,5	HW	10	**602515** ●
HeliCut 11 (peripheral tip)	11	11	1,5	TDC		**602904** ●
HeliCut 11 (plunging tip D30)	20,6	12,7	2	HW	10	**602531** ●
HeliCut 11 (plunging tip D40)	22	12,7	2	HW		**602516** ●

ID = 1 piece.

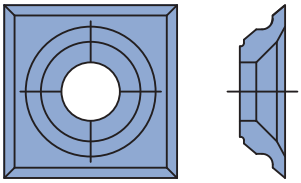

Turnblade knife with 4 cutting edges

Workpiece material:
Softwood and hardwood

Cutting material:
HW

Knife height 21 mm with 4 cutting edges

HW
TM 410 0

SB mm	H mm	DIK mm	QAL	ID
21	21	5,5	HW	**009527** ●

● available ex stock
□ available at short notice
Instruction manual visit www.leitz.org

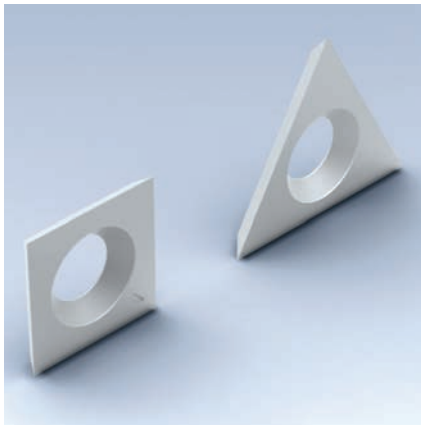



VS 1

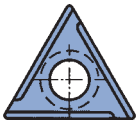

VS 3L



VS 2



VS 4

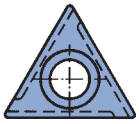

VS 3R

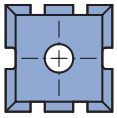

ID **005100**

Workpiece material:
Solid wood, wood derived materials

Cutting material:
HW fine grain quality / DP*

Spurs

HW / DP
TM 405 0, TM 480 0

SB mm	H mm	DIK mm	KBZ	QAL		VE PCS	ID
14	14	2	VS 1	HW-F		10	**005099** ●
14	14	1,2	VS 4	HW		10	**005130** ●
14	14	1,2	Holz-Her	HW		10	**602500** ●
15	15	2		HW			**005100** ●
19		2	VS 2	HW-F		10	**005115** ●
19		2	VS 2R*	HW-F		10	**006615** ●
19		2	VS 2L*	HW-F		10	**006616** ●
19		2	VS 2	DP	*	2	**006607** ●
19		2	VS 3R	HW-F			**005116** ●
19		2	VS 3L	HW-F			**005159** ●

* = Spurs with reduced slotting depth. Knives can be used alternatively in VS2 knife seating.
DP* = diamond coated.
ID = 1 piece.

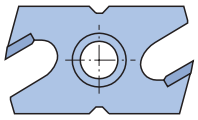

Grooving knife

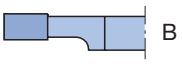

Grooving knife image

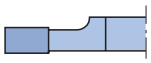

Grooving knife mirror image

Workpiece material:
Softwood and hardwood

Cutting material:
HW fine grain quality

Grooving knives

Mechanical feed
TM 460 0

SB mm	KBZ	QAL	ID
3	NA 3B	HW-F	**008315** ●
3	NA 3S	HW-F	**008316** ●
3	NAK 3B*	HW-F	**616002** ●
3	NAK 3S*	HW-F	**616003** ●
4,5	NA 4,5	HW-F	**008333** ●
4	NA 4	HW-F	**008317** ●
5	NA 5	HW-F	**008318** ●
7	NA 7	HW-F	**008319** ●
8	NAN 8	HW-F	**008349** ●
9	NA 9	HW-F	**008320** ●

* Grooving knife with reduced grooving depth

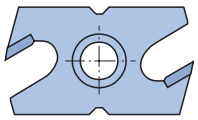

Grooving knife

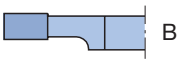

Grooving knife image

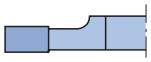

Grooving knife mirror image

Workpiece material:
Softwood and hardwood

Cutting material:
HW fine grain quality

Manual feed
TM 460 1

SB mm	KBZ	QAL	ID
3	NB 3B	HW-F	**008321** ●
3	NB 3S	HW-F	**008322** ●
3	NBK 3B*	HW-F	**616000** ●
3	NBK 3S*	HW-F	**616001** ●
4	NB 4	HW-F	**008323** ●
5	NB 5	HW-F	**008324** ●
7	NB 7	HW-F	**008325** ●
8	NBN 8	HW-F	**008348** ●
9	NB 9	HW-F	**008326** ●

* Grooving knife with reduced grooving depth.

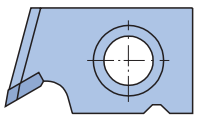

Profile grooving knife

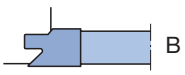

Profile grooving knife image

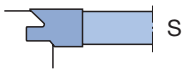

Profile grooving knife mirror image

Workpiece material:
Softwood and hardwood

Cutting material:
HW fine grain quality

Profile grooving knives

For sealing strip
TM 160 0

SB mm	KBZ	QAL	ID
8	NC 1B	HW-F	**008327** ●
8	NC 1S	HW-F	**008328** ●

● available ex stock
□ available at short notice
Instruction manual visit www.leitz.org



Lamello turnblade knives

Cutting material:
HW

Lamello turnblade knives

HW
TM 463 0

SB mm	H mm	DIK mm	KBZ	QAL	VE PCS	ID
18	18	1,95	WP 18/1,95	HW	10	**005114** ●
18	18	2,5	WP 18/2,5	HW	10	**005195** ●

ID = 1 piece.

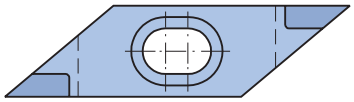

Rhomboid turnblade knives

Cutting material:
HW fine grain quality

Rhomboid turnblade knives

HW-F
TM 461 0

L mm	H mm	SB mm	KBZ	QAL	ID
45,416	12	5,6	RMA 5,6	HW-F	**008329** ●
45,416	12	6,6	RMA 6,6	HW-F	**008330** ●

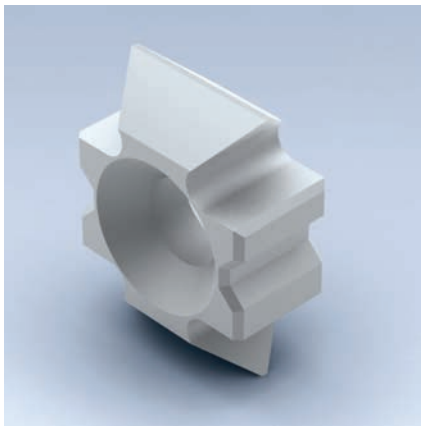

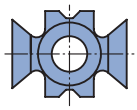

Workpiece material:
Softwood and hardwood

Cutting material:
HW fine grain quality

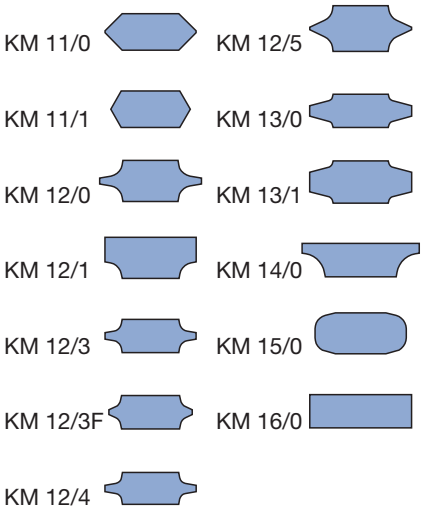

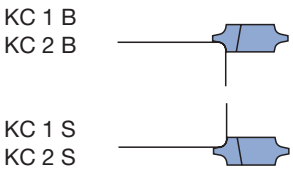

Workpiece material:
Softwood and hardwood

Cutting material:
HW fine grain quality

Mechanical feed

HW-F
TM 462 0

SB mm	H mm	DIK mm	KBZ	QAL	ID
20	15	8	KM 11/0 45°	HW-F	**008268** ●
20	15	7	KM 12/4 R1,5	HW-F	**008272** ●
20	15	7,3	KM 12/3 R2	HW-F	**008307** ●
22,3	15	9	KM 12/0 R3	HW-F	**008270** ●
22	15	9	KM 15/0 R3	HW-F	**008275** ●
20	15	9	KM 12/1 R3	HW-F	**008271** ●
17,5	15	8	KM 11/1 60°	HW-F	**008269** ●
18,3	15	7,3	KM 12/3F R2F	HW-F	**008308** ●
22,3	15	10	KM 12/5 R3F	HW-F	**008273** ●
22,3	15	7,3	KM 13/0 N5	HW-F	**008274** ●
22,3	15	9	KM 13/1 N7	HW-F	**008287** ●
22,3	15	7,3	KM 16/0	HW-F	**008286** ●
22,3	15	7,3	KM 14/0 R5	HW-F	**008347** ●

HW-F, with bevelled cutting area
TM 462 0

SB mm	H mm	DIK mm	KBZ	QAL	ID
20	15	8,3	KC 1B (R2)	HW-F	**008334** ●
20	15	10	KC 2B (R3)	HW-F	**008335** ●
20	15	8,3	KC 1S (R2)	HW-F	**008336** ●
20	15	10	KC 2S (R3)	HW-F	**008337** ●

● available ex stock
□ available at short notice
Instruction manual visit www.leitz.org

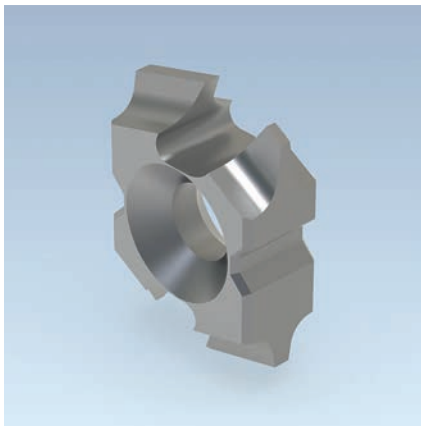

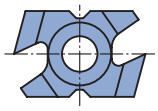

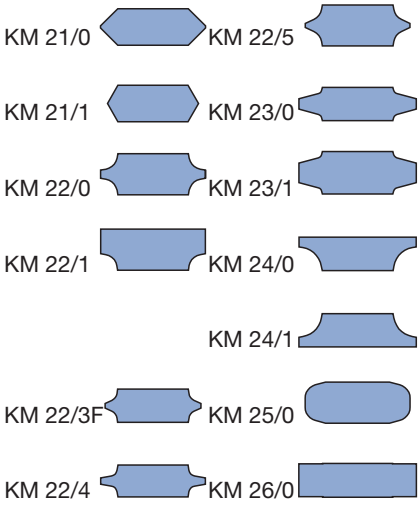

Workpiece material:
Softwood and hardwood

Cutting material:
HW fine grain quality

Manual feed

HW-F
TM 462 1

SB mm	H mm	DIK mm	KBZ	QAL	ID
23	15	7,3	KM 22/3 R2	HW-F	**008309** ●
23	15	8	KM 21/0 45°	HW-F	**008292** ●
23	15	9	KM 22/1 R3	HW-F	**008290** ●
25,7	15	7,3	KM 24/0 R5	HW-F	**008305** ●
23	15	7	KM 22/4 R1,5	HW-F	**008295** ●
23	15	9	KM 25/0 R3	HW-F	**008291** ●
25,7	15	9,3	KM 23/1 N7	HW-F	**008298** ●
25,7	15	7,3	KM 24/1 R5	HW-F	**008306** ●
23	15	9	KM 22/0 R3	HW-F	**008293** ●
20,5	15	8	KM 21/1 60°	HW-F	**008294** ●
21	15	7,3	KM 22/3F R2F	HW-F	**008310** ●
23	15	9	KM 22/5 R3F	HW-F	**008296** ●
25,7	15	7,3	KM 23/0 N5	HW-F	**008297** ●
25,7	15	7,3	KM 26/0	HW-F	**008299** ●



Cutting material recommendation	HS Classic / Premium	MC33	HW
Solid wood dry	♦	♦	◇
Solid wood wet	◇	♦	
Hardwood dry	◇	♦	♦
Hardwood wet	◇	♦	
Glulam		◇	◇
Thermoplastics (PE, PP, PVC, etc.)	♦	♦	◇
WPC (Wood-Plastic-Composite)	◇	♦	◇

♦ suitable ◇ partly suitable



Cross section of planer knife (HS Classic / HS Premium / MC33)



Cross section of planer knife (HW)

Cutting material:
HS Classic / HS Premium / MC33 / HW
Wedge angle:
40° (HS Classic / HS Premium / MC33)
45° (HW)

Knife height 30 mm

For planerhead wedge-type system WM 200 2 05
TM 100 0, TM 100 0 03, TM 100 0 05

SB mm	H mm	DIK mm	VE PCS	ID HS Classic	ID HS Premium	ID HW	ID MC33
60	30	3	2	**605000**	**027101** ●	**027277** ●	**606700** ●
80	30	3	2	**605001**	**027102** ●	**027278** ●	**606701** ●
100	30	3	2	**605002** ●	**027103** ●	**027279** ●	**606702** ●
110	30	3	2	**605003**	**027104** ●	**027280** ●	**606703** ●
120	30	3	2	**605004**	**027105** ●	**027281** ●	**606704** ●
130	30	3	2	**605005** ●	**027106** ●	**027282** ●	**606705** ●
150	30	3	2	**605006** ●	**027107** ●	**027283** ●	**606706** ●
160	30	3	2	**605045** ●	**027163** ●		**606745** ●
170	30	3	2	**605007** ●	**027108** ●	**027284** ●	**606707** ●
180	30	3	2	**605008** ●	**027109** ●	**027285** ●	**606708** ●
190	30	3	2	**605009**	**027144** ●	**027322** ●	**606709** ●
210	30	3	2	**605010**	**027110** ●	**027286** ●	**606710** ●
230	30	3	2	**605011** ●	**027111** ●	**027287** ●	**606711** ●
240	30	3	2	**605012** ●	**027134** ●	**027323** ●	**606712** ●
250	30	3	2	**605013**	**027161** ●		**606713** ●
260	30	3	2	**605014** ●	**027112** ●	**027288** ●	**606714** ●
270	30	3	2	**605015**	**027162** ●		**606715** ●
310	30	3	2	**605016** ●	**027113** ●	**027289** ●	**606716** ●
320	30	3	2	**605046**	**027164** ●		**606746** ●
360	30	3	2	**605029**	**027114** ●	**027292** ●	**606729** ●
400	30	3	2	**605030**	**027115** ●		**606730** ●
410	30	3	2	**605031** ●	**027116** ●	**027293** ●	**606731** ●
460	30	3	2	**605032**	**027130** ●	**027295** ●	**606732** □
500	30	3	2	**605033**	**027117** ●		**606733** □
510	30	3	2	**605034** ●	**027118** ●	**027296** ●	**606734** □
600	30	3	2	**605035**	**027119** ●		**606735** □
610	30	3	2	**605036** ●	**027120** ●	**027297** ●	**606736** □
630	30	3	2	**605037**	**027125** ●	**027298** ●	**606737** □
640	30	3	2	**605038** ●	**027121** ●	**027299** ●	**606738** □
710	30	3	2	**605039**	**027122** ●	**027300** ●	**606739** □
810	30	3	2	**605040** ●	**027123** ●	**027302** ●	**606740** □

ID = 1 piece.

Knife height 35 mm

For long planerheads wedge-type system
TM 100 0, TM 100 0 03, TM 100 0 05

SB mm	H mm	DIK mm	VE PCS	ID HS Classic	ID HS Premium	ID HW	ID MC33
60	35	3	2	**605119**	**027387** ●		**606819** ●
100	35	3	2	**605120**	**027388** ●		**606820** ●
160	35	3	2	**605121**	**027389** ●		**606821** ●
230	35	3	2	**605122**	**027390** ●		**606822** ●
310	35	3	2	**605100**	**027351** ●	**027303** ●	**606800** ●
320	35	3	2	**605101**	**027352** ●	**027304** □	**606801** ●
330	35	3	2	**605102**	**027353** ●	**027305** □	**606802** ●
360	35	3	2	**605103**	**027354** ●	**027306** □	**606803** ●
400	35	3	2	**605104**	**027355** ●	**027307** □	**606804** ●
410	35	3	2	**605105** ●	**027356** ●	**027308** ●	**606805** ●
450	35	3	2	**605106**	**027357** ●	**027309** □	**606806** □
460	35	3	2	**605107**	**027358** ●	**027310** □	**606807** □
500	35	3	2	**605108** ●	**027359** ●	**027311** □	**606808** □
510	35	3	2	**605109** ●	**027360** ●	**027312** ●	**606809** □
600	35	3	2	**605110**	**027361** ●	**027313** □	**606810** □
610	35	3	2	**605111** ●	**027362** ●	**027314** □	**606811** □
630	35	3	2	**605112**	**027363** ●	**027315** ●	**606812** □
635	35	3	2	**605113**	**027364** ●	**027316** ●	**606813** □
640	35	3	2	**605114** ●	**027365** ●	**027317** ●	**606814** □
660	35	3	2		**027371** ●		
700	35	3	2	**605115**	**027366** ●	**027318** □	**606815** □
710	35	3	2	**605116**	**027367** ●	**027319** □	**606816** □
740	35	3	2	**605117**	**027368** ●	**027320** □	**606817** □
810	35	3	2	**605118** ●	**027369** ●	**027321** ●	**606818** □

ID = 1 piece.

● available ex stock
□ available at short notice
Instruction manual visit www.leitz.org

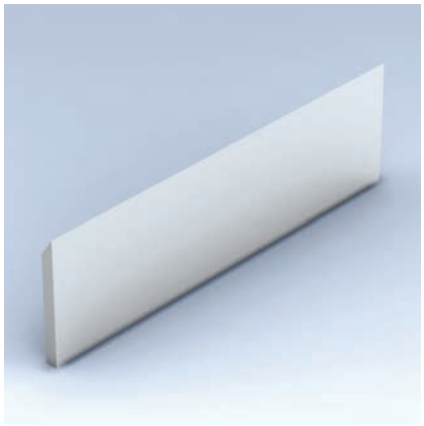

Cutting material recommendation	HS	HW
Solid wood dry	♦	
Solid wood wet	◇	
Hardwood dry		♦
Hardwood wet		♦
Glulam		♦
Chipboard		◇
MDF		◇
Thermoplastics (PE, PP, PVC, etc.)		◇
WPC (Wood-Plastic-Composite)		◇

♦ suitable ◇ partly suitable



Cross section of planer knife
(HS Classic / HS Premium / MC33)



Cross section of planer knife (HW)

Cutting material:
HS / HW

Knives for cassette system

Planer knives 30 mm with threaded bore
TM 105 0

SB mm	H mm	DIK mm	VE PCS	ID HS	ID HW
130	30	3	2	**006825** ●	**006915** ●
150	30	3	2	**006928** ●	**006931** ●
180	30	3	2	**006826** ●	**006916** ●
190	30	3	2	**006929** ●	
230	30	3	2	**006827** ●	**006917** ●
240	30	3	2	**006926** ●	

ID = 1 piece.



Cutting material recommendation	MC 33
Solid wood dry	♦
Solid wood wet	♦
Hardwood dry	♦
Hardwood wet	♦
Glulam	◇
Chipboard	
MDF	
Thermoplastics (PE, PP, PVC, etc.)	♦
WPC (Wood-Plastic-Composite)	♦

♦ suitable ◇ partly suitable

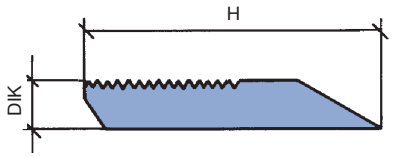

Cutting material:
MC33

Planer knives with 60° back serration

For planerhead with 60° back serrated knife fixture
AT 103 0 29

SB mm	H mm	DIK mm	SET PCS	QAL	ID
150	30	5	2	MC33	**697359** □
230	30	5	2	MC33	**697360** □
310	30	5	2	MC33	**697361** □
320	30	5	2	MC33	**697362** □
330	30	5	2	MC33	**697363** □
40	40	5	2	MC33	**697300** ●
60	40	5	2	MC33	**697301** ●
80	40	5	2	MC33	**697302** ●
100	40	5	2	MC33	**697303** ●
130	40	5	2	MC33	**697304** ●
150	40	5	2	MC33	**697305** ●
170	40	5	2	MC33	**697306** ●
180	40	5	2	MC33	**697307** ●
190	40	5	2	MC33	**697308** ●
210	40	5	2	MC33	**697309** ●
230	40	5	2	MC33	**697310** ●
240	40	5	2	MC33	**697311** ●
270	40	5	2	MC33	**697312** ●
310	40	5	2	MC33	**697313** ●

Set of the same weight.

● available ex stock
□ available at short notice
Instruction manual visit www.leitz.org



Cutting material recommendation	HW-30F jointable	HW-10F not jointable
Solid wood dry	♦	
Solid wood wet		
Hardwood dry	♦	♦
Hardwood wet		◇
Glulam	◇	♦
Chipboard		♦
MDF	♦	♦
Thermoplastics (PE, PP, PVC, etc.)	♦	♦
WPC (Wood-Plastic-Composite)	♦	♦

♦ suitable ◇ partly suitable

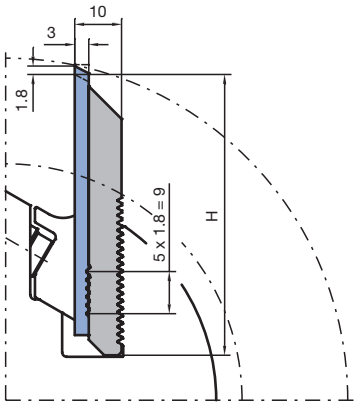

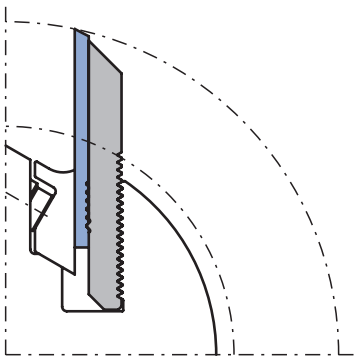

Planer knives Powerknife System PKS®

For planerhead with 60° back serrated knife fixture
AT 103 0 26, AT 107 0 26

SB mm	H mm	DIK mm	SET PCS	QAL	ID Blank knife set	ID Blank knife set with backing plate
40	40	10	2	HW-30F	**696614** □	**697814** □
60	40	10	2	HW-30F	**696615** □	**697815** □
80	40	10	2	HW-30F	**696616** □	**697816** □
100	40	10	2	HW-30F	**696617** □	**697817** □
130	40	10	2	HW-30F	**696618** □	**697818** □
150	40	10	2	HW-30F	**696619** ●	**697819** ●
170	40	10	2	HW-30F	**696620** ●	**697820** ●
180	40	10	2	HW-30F	**696621** □	**697821** □
190	40	10	2	HW-30F	**696622** □	**697822** □
210	40	10	2	HW-30F	**696623** ●	**697823** ●
230	40	10	2	HW-30F	**696624** □	**697824** □
240	40	10	2	HW-30F	**696625** ●	**697825** ●
270	40	10	2	HW-30F	**696626** □	**697826** □
310	40	10	2	HW-30F	**696627** ●	**697827** ●
40	40	10	2	HW-10F	**696600** □	**697800** □
60	40	10	2	HW-10F	**696601** □	**697801** □
80	40	10	2	HW-10F	**696602** □	**697802** □
100	40	10	2	HW-10F	**696603** □	**697803** □
130	40	10	2	HW-10F	**696604** □	**697804** □
150	40	10	2	HW-10F	**696605** ●	**697805** ●
170	40	10	2	HW-10F	**696606** ●	**697806** ●
180	40	10	2	HW-10F	**696607** □	**697807** □
190	40	10	2	HW-10F	**696608** □	**697808** □
210	40	10	2	HW-10F	**696609** ●	**697809** ●
230	40	10	2	HW-10F	**696610** □	**697810** □
240	40	10	2	HW-10F	**696611** ●	**697811** ●
270	40	10	2	HW-10F	**696612** □	**697812** □
310	40	10	2	HW-10F	**696613** ●	**697813** ●

- Blank knives with polished cutting face for high cutting edge quality.
- Solid tungsten carbide - profile knives, adjustable (1.80 mm steps).
- Knives supported by profiled backing plates.
- Resharpening area 10.8 mm at maximum profile depth.

Set of the same weight.

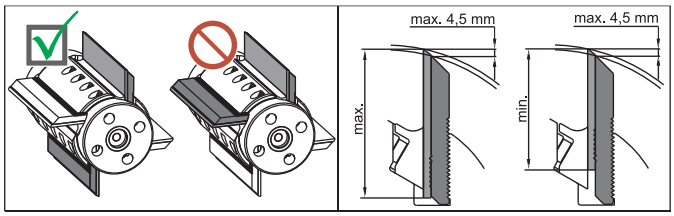

Cutting material:
HW-30F / HW-10F

Attention:
Maximum knife protrusion above the backing plate 4.5 mm. For safety reasons, only mount knives and backing plates of same weight in opposite seatings.

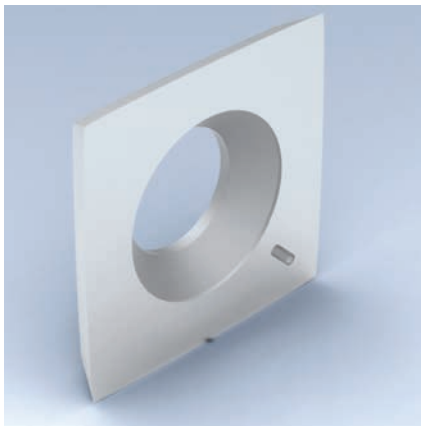

Turnblade planing knives HeliPlan

For cutterhead system HeliPlan
TM 405 0

BEZ	ABM mm	QAL	VE PCS	ID
Turnblade knife	15x15x2,5	HW	10	**009535** ●
Turnblade knife	15x15x2,5	TDC		**602901** ●

ID = 1 piece.

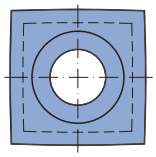

HW turnblade knife

Workpiece material:
Softwood and hardwood

Cutting material:
HW / TDC

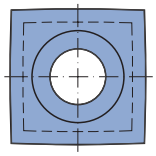

Turnblade planing knives CASTOR

For cutterhead system CASTOR-Finish
TM 405 0

BEZ	ABM mm	QAL	VE PCS	ID
Turnblade knife	15x15x2,5	HW	10	**009540** ●

ID = 1 piece.

HW turnblade knife

Workpiece material:
Softwood and hardwood

Cutting material:
HW

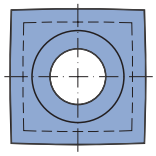

Turnblade planing knives

For cutterhead system
TM 405 0

BEZ	ABM mm	QAL	VE PCS	ID
Turnblade knife	13,8x13,8x2,5	HW	10	**602534** ●

ID = 1 piece

HW turnblade knife

Workpiece material:
Softwood and hardwood

Cutting material:
HW

● available ex stock
□ available at short notice
Instruction manual visit www.leitz.org

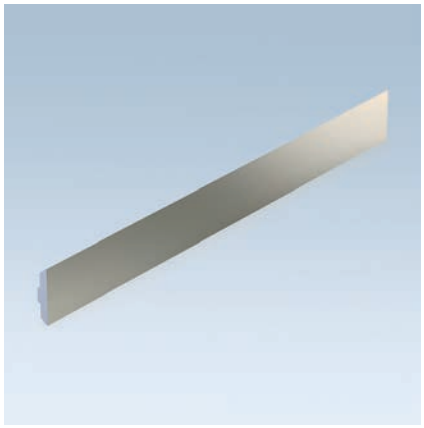

Cutting material recommendation	HW
Solid wood dry	♦
Solid wood wet	♦
Hardwood dry	♦
Hardwood wet	♦
Glulam	♦
Chipboard	◇
MDF	◇

♦ suitable ◇ partly suitable



Turnblade knife CentroPlan

Cutting material:
HW

Turnblade planing knives CentroPlan

For cutterhead system CentroPlan
AT 103 0 36

SB mm	H mm	DIK mm	SET PCS	QAL	ID
100	13	2,6	2	HW	**617604** □
120	13	2,6	2	HW	**617605** □
130	13	2,6	2	HW	**617606** ●
150	13	2,6	2	HW	**617607** ●
166	13	2,6	2	HW	**617671** ●
170	13	2,6	2	HW	**617611** □
180	13	2,6	2	HW	**617612** ●
190	13	2,6	2	HW	**617614** □
210	13	2,6	2	HW	**617615** ●
230	13	2,6	2	HW	**617616** □
236	13	2,6	2	HW	**617669** ●
240	13	2,6	2	HW	**617618** □
256	13	2,6	2	HW	**617672** □
270	13	2,6	2	HW	**617665** ●
310	13	2,6	2	HW	**617662** ●
330	13	2,6	2	HW	**617624**



Cutting material recommendation	HS	MC	HW
Solid wood dry	♦	♦	
Solid wood wet	◇	♦	
Hardwood dry		◇	♦
Hardwood wet		♦	♦
Glulam		♦	♦
Clipboard			◇
MDF			◇

♦ suitable ◇ partly suitable

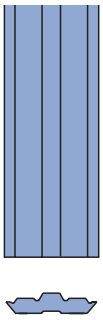

Turnblade knife CentroFix

Cutting material:
HS

Cutting material:
MC

Turnblade planing knives CentroStar, CentroFix, QuickFix

For cutterhead system CentroStar, CentroFix, QuickFix - HS
AT 103 0 02, AT 103 0 20

SB mm	H mm	DIK mm	SET PCS	QAL	ID
100	12	2,7	4	HS	**610203** ●
120	12	2,7	4	HS	**610204** ●
124,6	12	2,7	4	HS	**610244** ●
130	12	2,7	4	HS	**610205** ●
136	12	2,7	4	HS	**610206** ●
150	12	2,7	4	HS	**610208** ●
166	12	2,7	4	HS	**610286** ●
170	12	2,7	4	HS	**610210** ●
180	12	2,7	4	HS	**610211** ●
186	12	2,7	3	HS	**610247** ●
190	12	2,7	4	HS	**610212** ●
210	12	2,7	4	HS	**610213** ●
230	12	2,7	4	HS	**610214** ●
236	12	2,7	4	HS	**610287** ●
240	12	2,7	4	HS	**610215** ●
256	12	2,7	4	HS	**610288**
260	12	2,7	4	HS	**610017** ●
310	12	2,7	4	HS	**610018** ●
400	12	2,7	4	HS	**610022** ●
410	12	2,7	4	HS	**610023** ●
410	12	2,7	3	HS	**610043** ●
420	12	2,7	4	HS	**610024** ●
430	12	2,7	4	HS	**610025** ●
500	12	2,7	4	HS	**610028** ●
510	12	2,7	4	HS	**610029** ●
520	12	2,7	4	HS	**610030** ●
530	12	2,7	4	HS	**610031** ●
540	12	2,7	4	HS	**610032**
610	12	2,7	4	HS	**610034** ●
630	12	2,7	4	HS	**610036** ●
640	12	2,7	4	HS	**610038** ●
710	12	2,7	4	HS	**610040** ●
810	12	2,7	4	HS	**610042** ●

For cutterhead system CentroStar, CentroFix, QuickFix - MC
AT 103 0 20

SB mm	H mm	DIK mm	SET PCS	QAL	ID
100	12	2,7	4	MC	**610278** ●
120	12	2,7	4	MC	**610279**
130	12	2,7	4	MC	**610280** ●
150	12	2,7	4	MC	**610281**
180	12	2,7	4	MC	**610282** ●
230	12	2,7	4	MC	**610283** ●
240	12	2,7	4	MC	**610284** ●
310	12	2,7	4	MC	**610285**

● available ex stock
□ available at short notice
Instruction manual visit www.leitz.org

Cutting material:
HW-F

For cutterhead system CentroStar, CentroFix, QuickFix - HW-F
AT 103 0 20, TM 410 0 02

SB	H	DIK	SET	QAL	ID
mm	mm	mm	PCS		
100	12	2,7	2	HW-F	**610606** ●
120	12	2,7	2	HW-F	**610610** ●
130	12	2,7	2	HW-F	**610612** ●
136	12	2,7	2	HW-F	**610614** ●
150	12	2,7	2	HW-F	**610616** ●
166	12	2,7	2	HW-F	**610680** ●
170	12	2,7	2	HW-F	**610620** ●
180	12	2,7	2	HW-F	**610621** ●
190	12	2,7	2	HW-F	**610625** ●
210	12	2,7	2	HW-F	**610627** ●
230	12	2,7	2	HW-F	**610629** ●
236	12	2,7	2	HW-F	**610679** ●
240	12	2,7	2	HW-F	**610631** ●
256	12	2,7	2	HW-F	**610681**
400	12	2,7	1	HW-F	**612016** ●
410	12	2,7	1	HW-F	**612017** ●
420	12	2,7	1	HW-F	**612018** ●
430	12	2,7	1	HW-F	**612019** ●
500	12	2,7	1	HW-F	**612022** ●
510	12	2,7	1	HW-F	**612023** ●
520	12	2,7	1	HW-F	**612024** ●
530	12	2,7	1	HW-F	**612025** ●
540	12	2,7	1	HW-F	**612026** ●

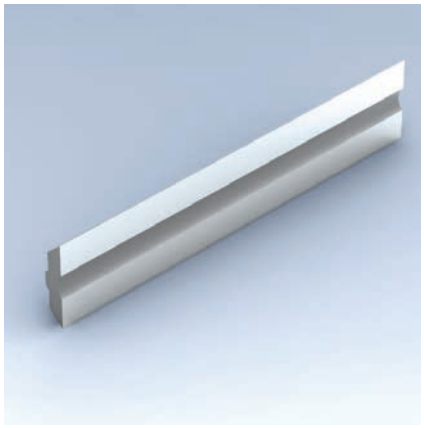

Cutting material recommendation	HS	HW
Solid wood dry	♦	
Solid wood wet	◊	
Hardwood dry		♦
Hardwood wet		♦
Glulam		♦
Clipboard		◊
MDF		◊

♦ suitable ◊ partly suitable

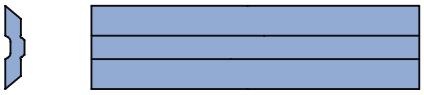

Turnblade knife VariPlan HS / HW resharpenable, for finish cutting of softwood and hardwood

Cutting material:
HS / HW

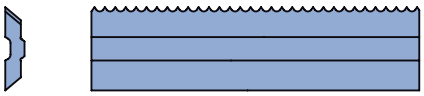

Turnblade knife VariPlan HW Integral resharpenable, for pre and finish cutting softwood and hardwood

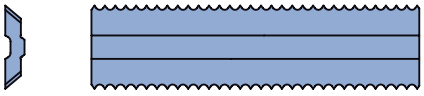

Turnblade knife VariPlan HW RipTec resharpenable, for pre-cutting softwood and hardwood

Cutting material:
HW

Turnblade planing knives VariPlan / VariPlan Plus

For cutterhead system VariPlan / VariPlan Plus
AT 103 0 03, AT 103 0 27

SB mm	H mm	DIK mm	SET PCS	ID HS	ID HW Microfinish
50	16	3,7	2	**610500** □	**617100** □
60	16	3,7	2	**610501** □	**617101** □
80	16	3,7	2	**610502** □	**617102** □
100	16	3,7	2	**610504** ●	**617104** □
120	16	3,7	2	**610505** ●	**617105** □
130	16	3,7	2	**610506** ●	**617106** ●
150	16	3,7	2	**610509** ●	**617109** ●
166	16	3,7	2	**610571** □	**617171** ●
170	16	3,7	2	**610511** ●	**617111** ●
180	16	3,7	2	**610512** ●	**617112** ●
190	16	3,7	2	**610514** ●	**617114** ●
210	16	3,7	2	**610515** ●	**617115** ●
230	16	3,7	2	**610516** ●	**617116** ●
236	16	3,7	2	**610569** □	**617169** ●
240	16	3,7	2	**610518** ●	**617118** ●
256	16	3,7	2	**610572** □	**617172** ●
270	16	3,7	2		**617165** ●
310	16	3,7	2	**610522** ●	**617122** ●
330	16	3,7	2		**617124** □
360	16	3,7	2		**617125** □
400	16	3,7	2	**610526** □	**617126** □
410	16	3,7	2	**610527** ●	**617127** □
410	16	3,7	3	**610528** □	
420	16	3,7	2	**610529** □	**617129** □
430	16	3,7	2	**610530** □	**617130** □
500	16	3,7	2	**610533** ●	**617133** □
510	16	3,7	4	**610562** □	**617162** □
520	16	3,7	4	**610563** □	**617163** □
530	16	3,7	2	**610536** □	**617136** □
540	16	3,7	2	**610537** □	**617137** □
600	16	3,7	2	**610538** ●	**617138** □
610	16	3,7	2	**610539** □	**617139** □
630	16	3,7	2	**610541** ●	**617141** □
640	16	3,7	4	**610564** □	**617164** □

For cutterhead system VariPlan Plus
AT 103 0 23, AT 103 0 24

SB mm	H mm	DIK mm	SET PCS	ID HW Integral	ID HW RipTec
100	16	3,7	2	**611904**	**611204** □
120	16	3,7	2	**611905**	**611205** □
130	16	3,7	2	**611906** ●	**611206** ●
150	16	3,7	2	**611909**	**611209** ●
166	16	3,7	2		**611271** ●
170	16	3,7	2	**611911** ●	**611211** ●
180	16	3,7	2	**611912** ●	**611212** ●
190	16	3,7	2	**611914**	**611214** ●
210	16	3,7	2	**611915**	**611215** ●
230	16	3,7	2	**611916**	**611216** ●
236	16	3,7	2		**611269** ●
240	16	3,7	2	**611918** ●	**611218** ●
270	16	3,7	2	**611965**	**611265** ●
310	16	3,7	2	**611922**	**611222** ●

● available ex stock
□ available at short notice
Instruction manual visit www.leitz.org

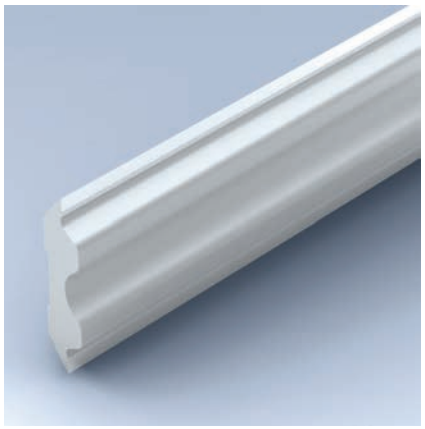

Cutting material recommendation	HS	HW
Solid wood dry	♦	
Solid wood wet	◇	
Hardwood dry		♦
Hardwood wet		♦
Glulam		♦
Clipboard		◇
MDF		◇

♦ suitable ◇ partly suitable

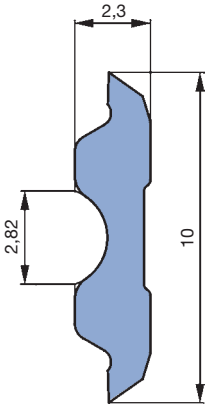

Turnblade knife MicroTec
Turnblade knife TriTec

Workpiece material:
Softwood and hardwood

Cutting material:
HS

Suitable for:
Long planerheads
on surface planers and thickness planing machines with centrifugal force clamping system (e.g. SCM, SAC, Panhans, Martin)
Cutterheads
with centrifugal force clamping system for 4-sided moulders (e.g. Weinig, SCM, Leadermac)

Turnblade planing knives TriTec

For cutterhead system Tersa, HS
AT 103 0 12

SB mm	H mm	DIK mm	QAL	SET PCS	ID
60	10	2,3	HS	4	**610900** □
80	10	2,3	HS	4	**610901** □
100	10	2,3	HS	4	**610902** ●
110	10	2,3	HS	4	**610903** ●
120	10	2,3	HS	4	**610904** ●
130	10	2,3	HS	4	**610905** ●
140	10	2,3	HS	4	**610906** ●
150	10	2,3	HS	4	**610907** ●
170	10	2,3	HS	4	**610908** ●
180	10	2,3	HS	4	**610909** ●
190	10	2,3	HS	4	**610910** ●
200	10	2,3	HS	4	**610911** ●
210	10	2,3	HS	4	**610912** ●
220	10	2,3	HS	4	**610913** ●
230	10	2,3	HS	4	**610914** ●
240	10	2,3	HS	4	**610915** ●
250	10	2,3	HS	4	**610916** ●
260	10	2,3	HS	4	**610917** ●
265	10	2,3	HS	4	**610918** ●
270	10	2,3	HS	4	**610919** ●
300	10	2,3	HS	4	**610920** ●
310	10	2,3	HS	4	**610921** ●
350	10	2,3	HS	4	**610922** ●
360	10	2,3	HS	4	**610923** □
400	10	2,3	HS	4	**610924** ●
410	10	2,3	HS	4	**610925** ●
420	10	2,3	HS	4	**610926** □
430	10	2,3	HS	4	**610927** ●
450	10	2,3	HS	4	**610928** □
460	10	2,3	HS	4	**610929** □
500	10	2,3	HS	4	**610930** ●
510	10	2,3	HS	4	**610931** ●
520	10	2,3	HS	4	**610932** ●
530	10	2,3	HS	4	**610933** ●
600	10	2,3	HS	4	**610934** □
610	10	2,3	HS	4	**610935** ●
630	10	2,3	HS	4	**610936** ●
640	10	2,3	HS	4	**610937** ●
660	10	2,3	HS	4	**610938** ●
710	10	2,3	HS	4	**610939** ●
740	10	2,3	HS	4	**610940** □
810	10	2,3	HS	4	**610941** ●

Further dimensions on request.

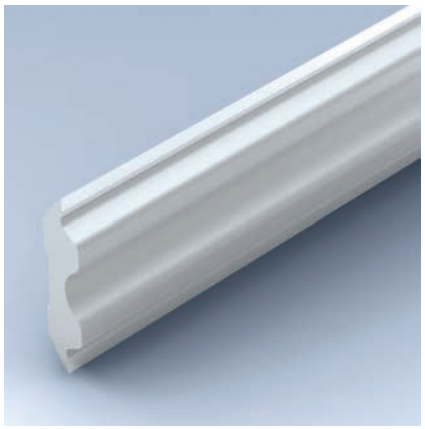

Cutting material recommendation	HS	HW
Solid wood dry	♦	
Solid wood wet	◇	
Hardwood dry		♦
Hardwood wet		♦
Glulam		♦
Clipboard		◇
MDF		◇

♦ suitable ◇ partly suitable

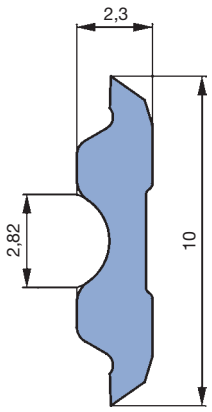

Turnblade knife MicroTec
Turnblade knife TriTec

Cutting material:
HW

Note:
Knives longer than 540 mm are cut into pieces.

Suitable for:
Long planerheads
on surface planers and thickness planing machines with centrifugal force clamping system (e.g. SCM, SAC, Panhans, Martin)
Cutterheads
with centrifugal force clamping system for 4-sided moulders (e.g. Weinig, SCM, Leadermac)

Turnblade planing knives MicroTec

For cutterhead system Tersa, HW
AT 103 0 12

SB mm	H mm	DIK mm	QAL	SET PCS	ID
60	10	2,3	HW	2	**610950** □
80	10	2,3	HW	2	**610951** □
100	10	2,3	HW	2	**610952** □
110	10	2,3	HW	2	**610953** □
120	10	2,3	HW	2	**610954** □
130	10	2,3	HW	2	**610955** □
140	10	2,3	HW	2	**610956** □
150	10	2,3	HW	2	**610957** □
170	10	2,3	HW	2	**610958** □
180	10	2,3	HW	2	**610959** □
190	10	2,3	HW	2	**610960** □
200	10	2,3	HW	2	**610961** □
210	10	2,3	HW	2	**610962** □
220	10	2,3	HW	2	**610963** □
230	10	2,3	HW	2	**610964** □
240	10	2,3	HW	2	**610965** □
250	10	2,3	HW	2	**610966** □
260	10	2,3	HW	2	**610967** □
265	10	2,3	HW	2	**610968** □
270	10	2,3	HW	2	**610969** □
300	10	2,3	HW	2	**610970** □
310	10	2,3	HW	2	**610971** □
350	10	2,3	HW	2	**610972** □
360	10	2,3	HW	2	**610973** □
400	10	2,3	HW	2	**610974** □
410	10	2,3	HW	2	**610975** □
420	10	2,3	HW	2	**610976** □
430	10	2,3	HW	2	**610977** □
450	10	2,3	HW	2	**610978** □
460	10	2,3	HW	2	**610979** □
500	10	2,3	HW	2	**610980** □
510	10	2,3	HW	2	**610981** □
520	10	2,3	HW	2	**610982** □
530	10	2,3	HW	2	**610983** □

Further dimensions on request.

● available ex stock
□ available at short notice
Instruction manual visit www.leitz.org



Cutting material recommendation	HS	MC	HW
Solid wood dry	♦	♦	
Solid wood wet	◇	♦	
Hardwood dry		◇	♦
Hardwood wet		♦	♦
Glulam		♦	♦
Clipboard			◇
MDF			◇

♦ suitable ◇ partly suitable

Cutting material:
HS / MC / HW

Turnblade planing knives Centrolock

For cutterhead system Centrolock / Easylock
AT 103 0 13

SB mm	H mm	DIK mm	SET PCS	ID HS	ID HW	ID MC
60	16	3	2	**611801** ●	**611861** ●	**611831** ●
80	16	3	2	**611802** ●	**611862** ●	**611832** ●
100	16	3	2	**611803** ●	**611863** ●	**611833** ●
130	16	3	2	**611804** ●	**611864** ●	**611834** ●
150	16	3	2	**611805** ●	**611865** ●	**611835** ●
170	16	3	2	**611806** ●	**611866** ●	**611836** ●
180	16	3	2	**611807** ●	**611867** ●	**611837** ●
190	16	3	2	**611808** ●	**611868** ●	**611838** ●
230	16	3	2	**611809** ●	**611869** ●	**611839** ●
240	16	3	2	**611810** ●	**611870** ●	**611840** ●
260	16	3	2	**611811** ●	**611871** ●	**611841** ●
270	16	3	2	**611812** ●	**611872** ●	**611842** ●
285	16	3	2	**611817** ●	**611877** ●	**611847**
310	16	3	2	**611813** ●	**611873** ●	**611843** ●
460	16	3	2	**611814** ●		

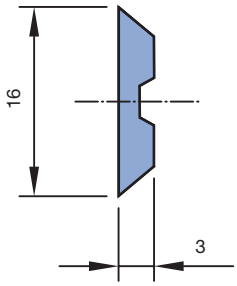



Cutting material:
HS

Spiral planer knife

One-way knife for spiral long planerhead
TM 101 0

BEZ	SB mm	QAL	ID
HS-Spiral knife, one-way	410	HS	**006841** ●
HS-Spiral knife, one-way	420	HS	**006910**
HS-Spiral knife, one-way	510	HS	**006842** ●
HS-Spiral knife, one-way	520	HS	**006911** ●
HS-Spiral knife, one-way	610	HS	**006843** ●
HS-Spiral knife, one-way	630	HS	**006912** ●
HS-Spiral knife, one-way	640	HS	**006844** ●

Resharpenable knife for spiral long planerhead
TM 106 0

BEZ	SB mm	QAL	ID
HS-Spiral knife, resharpenable	410	HS	**006828** ●
HS-Spiral knife, resharpenable	420	HS	**006907**
HS-Spiral knife, resharpenable	510	HS	**006829** ●
HS-Spiral knife, resharpenable	520	HS	**006908**
HS-Spiral knife, resharpenable	610	HS	**006830** ●
HS-Spiral knife, resharpenable	630	HS	**006909** ●
HS-Spiral knife, resharpenable	640	HS	**006831** ●



Cutting material recommendation	HS	MC 33
Solid wood dry	♦	♦
Solid wood wet	◇	♦
Hardwood dry	◇	♦
Hardwood wet	◇	♦
Glulam		◇
Thermoplastics (PE, PP, PVC, etc.)	♦	♦
WPC (Wood-Plastic-Composite)	◇	♦

♦ suitable ◇ partly suitable

H	PT
mm	mm
50	15
60	20
70	30

Table to determine maximum profile depth.
The profile depth figures are to be regarded as standard values. The maximum profile depth depends on the tool diameter and cutting angle.

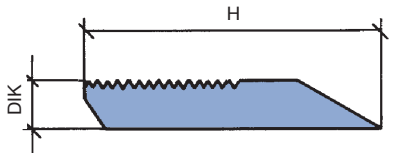

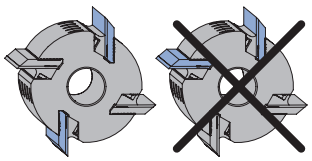

Attention:
For safety reasons, always mount knives of the same weight in opposite seatings

Cutting material:
HS / MC33

Blank knives with 60° back serration

HS and MC33 blank knives, for profile and hydro profile cutterheads
AT 103 0 28, AT 103 0 29

SB mm	H mm	DIK mm	PT_{max} mm	SET PCS	ID HS	ID MC33
40	50	8	15	2	**697500** □	**697314** ●
60	50	8	15	2	**697501** □	**697315** ●
80	50	8	15	2	**697502** □	**697316** ●
100	50	8	15	2	**697503** □	**697317** ●
130	50	8	15	2	**697504** □	**697318** ●
150	50	8	15	2	**697505** □	**697319** ●
170	50	8	15	2	**697506** □	**697320** ●
180	50	8	15	2	**697507** □	**697321** □
190	50	8	15	2	**697508** □	**697322** □
210	50	8	15	2	**697509** □	**697323** □
230	50	8	15	2	**697510** □	**697324** ●
240	50	8	15	2	**697511** □	**697325** ●
260	50	8	15	2	**697512** □	**697326** □
270	50	8	15	2	**697513** □	**697327** □
310	50	8	15	2	**697514** □	**697328** ●
40	60	8	20	2	**697515** □	**697329** ●
60	60	8	20	2	**697516** □	**697330** ●
80	60	8	20	2	**697517** □	**697331** ●
100	60	8	20	2	**697518** □	**697332** ●
130	60	8	20	2	**697519** □	**697333** ●
150	60	8	20	2	**697520** □	**697334** ●
170	60	8	20	2	**697521** □	**697335** ●
180	60	8	20	2	**697522** □	**697336** □
190	60	8	20	2	**697523** □	**697337** □
210	60	8	20	2	**697524** □	**697338** □
230	60	8	20	2	**697525** □	**697339** ●
240	60	8	20	2	**697526** □	**697340** ●
260	60	8	20	2	**697527** □	**697341** □
270	60	8	20	2	**697528** □	**697342** □
310	60	8	20	2	**697529** □	**697343** ●
40	70	8	30	2	**697530** □	**697344** ●
60	70	8	30	2	**697531** □	**697345** ●
80	70	8	30	2	**697532** □	**697346** ●
100	70	8	30	2	**697533** □	**697347** ●
130	70	8	30	2	**697534** □	**697348** ●
150	70	8	30	2	**697535** □	**697349** ●
170	70	8	30	2	**697536** □	**697350** ●
180	70	8	30	2	**697537** □	**697351** ●
190	70	8	30	2	**697538** □	**697352** □
210	70	8	30	2	**697539** □	**697353** □
230	70	8	30	2	**697540** □	**697354** □
240	70	8	30	2	**697541** □	**697355** ●
260	70	8	30	2	**697542** □	**697356** □
270	70	8	30	2	**697543** □	**697357** □
310	70	8	30	2	**697544** □	**697358** □

MC33 blank knive set of the same weight.

HS and MC33 blank knives for cutting to individual cutting width
TC 110 0, TC 110 0 03

SB mm	H mm	DIK mm	PT_{max} mm	ID HS	ID MC33
650	38,1	8	5	**635003** □	**635206** □
650	45	8	10	**635004** □	**635207** □
650	50	8	15	**635000** ●	**635203** □
650	60	8	20	**635001** ●	**635204** □
650	70	8	30	**635002** ●	**635205** □

ID = 1 piece.

● available ex stock
□ available at short notice
Instruction manual visit www.leitz.org



Cutting material recommendation	HW-30F jointable	HW-10F not jointable
Solid wood dry	♦	
Solid wood wet		
Hardwood dry	♦	♦
Hardwood wet		◇
Glulam	◇	♦
Chipboard		♦
MDF	♦	♦
Thermoplastics (PE, PP, PVC, etc.)	♦	♦
WPC (Wood-Plastic-Composite)	♦	♦

♦ suitable ◇ partly suitable

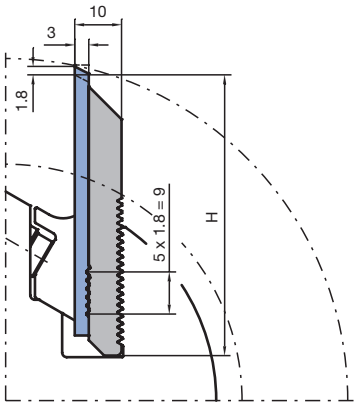

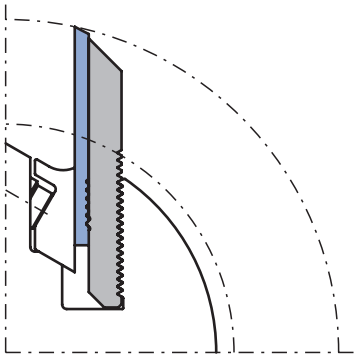

Blank knives / backing plates Powerknife System PKS®

For profile and hydro profile cutterheads, PT 15 mm
AT 103 0 26, AT 107 0 26

SB mm	H mm	DIK mm	PT_{max} mm	SET PCS	QAL	ID Blank knife set	ID Blank knife set with backing plate
40	50	10	15	2	HW-30F	**696642** ●	**697842** ●
60	50	10	15	2	HW-30F	**696643** ●	**697843** ●
80	50	10	15	2	HW-30F	**696644** ●	**697844** ●
100	50	10	15	2	HW-30F	**696645** ●	**697845** ●
130	50	10	15	2	HW-30F	**696646** ●	**697846** ●
150	50	10	15	2	HW-30F	**696647** ●	**697847** ●
170	50	10	15	2	HW-30F	**696648** □	**697848** □
180	50	10	15	2	HW-30F	**696649** □	**697849** □
190	50	10	15	2	HW-30F	**696650** □	**697850** □
210	50	10	15	2	HW-30F	**696651** □	**697851** □
230	50	10	15	2	HW-30F	**696652** □	**697852** □
240	50	10	15	2	HW-30F	**696653** ●	**697853** ●
270	50	10	15	2	HW-30F	**696654** □	**697854** □
310	50	10	15	2	HW-30F	**696655** ●	**697855** ●
40	50	10	15	2	HW-10F	**696628** ●	**697828** ●
60	50	10	15	2	HW-10F	**696629** ●	**697829** ●
80	50	10	15	2	HW-10F	**696630** ●	**697830** ●
100	50	10	15	2	HW-10F	**696631** ●	**697831** ●
130	50	10	15	2	HW-10F	**696632** ●	**697832** ●
150	50	10	15	2	HW-10F	**696633** ●	**697833** ●
170	50	10	15	2	HW-10F	**696634** □	**697834** □
180	50	10	15	2	HW-10F	**696635** □	**697835** □
190	50	10	15	2	HW-10F	**696636** □	**697836** □
210	50	10	15	2	HW-10F	**696637** □	**697837** □
230	50	10	15	2	HW-10F	**696638** □	**697838** □
240	50	10	15	2	HW-10F	**696639** ●	**697839** ●
270	50	10	15	2	HW-10F	**696640** □	**697840** □
310	50	10	15	2	HW-10F	**696641** ●	**697841** ●

The indicated profile depth values should be regarded as standard values for information. The maximum profile depth depends on the tool diameter and cutting angle.

Set of the same weight.
- Blank knives with polished cutting face for high cutting edge quality.
- Solid tungsten carbide - profile knives, adjustable (1.80 mm steps).
- Knives supported by profiled backing plates.
- Resharpening area 10.8 mm at maximum profile depth.

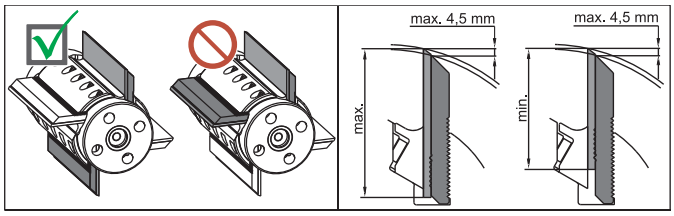

Cutting material:
HW-30F / HW-10F

Attention:
Maximum knife protrusion above the backing plate 4.5 mm. For safety reasons, only mount knives and backing plates of same weight in opposite seatings.

For profile and hydro profile cutterheads, PT 20 mm
AT 103 0 26, AT 107 0 26

SB mm	H mm	DIK mm	PT_{max} mm	SET PCS	QAL	ID Blank knife set	ID Blank knife set with backing plate
40	60	10	20	2	HW-30F	**696670** ●	**697870** ●
60	60	10	20	2	HW-30F	**696671** ●	**697871** ●
80	60	10	20	2	HW-30F	**696672** ●	**697872** ●
100	60	10	20	2	HW-30F	**696673** ●	**697873** ●
130	60	10	20	2	HW-30F	**696674** ●	**697874** ●
150	60	10	20	2	HW-30F	**696675** ●	**697875** ●
170	60	10	20	2	HW-30F	**696676** □	**697876** □
180	60	10	20	2	HW-30F	**696677** □	**697877** □
190	60	10	20	2	HW-30F	**696678** □	**697878** □
210	60	10	20	2	HW-30F	**696679** □	**697879** □
230	60	10	20	2	HW-30F	**696680** □	**697880** □
240	60	10	20	2	HW-30F	**696681** ●	**697881** ●
40	60	10	20	2	HW-10F	**696656** ●	**697856** ●
60	60	10	20	2	HW-10F	**696657** ●	**697857** ●
80	60	10	20	2	HW-10F	**696658** ●	**697858** ●
100	60	10	20	2	HW-10F	**696659** ●	**697859** ●
130	60	10	20	2	HW-10F	**696660** ●	**697860** ●
150	60	10	20	2	HW-10F	**696661** ●	**697861** ●
170	60	10	20	2	HW-10F	**696662** □	**697862** □
180	60	10	20	2	HW-10F	**696663** □	**697863** □
190	60	10	20	2	HW-10F	**696664** □	**697864** □
210	60	10	20	2	HW-10F	**696665** □	**697865** □
230	60	10	20	2	HW-10F	**696666** □	**697866** □
240	60	10	20	2	HW-10F	**696667** ●	**697867** ●

For profile and hydro profile cutterheads, PT 30 mm
AT 103 0 26, AT 107 0 26

SB mm	H mm	DIK mm	PT_{max} mm	SET PCS	QAL	ID Blank knife set	ID Blank knife set with backing plate
40	70	10	30	2	HW-30F	**696691** ●	**697891** ●
60	70	10	30	2	HW-30F	**696692** ●	**697892** ●
80	70	10	30	2	HW-30F	**696693** ●	**697893** ●
100	70	10	30	2	HW-30F	**696694** ●	**697894** ●
130	70	10	30	2	HW-30F	**696695** ●	**697895** ●
150	70	10	30	2	HW-30F	**696696** ●	**697896** ●
40	70	10	30	2	HW-10F	**696684** ●	**697884** ●
60	70	10	30	2	HW-10F	**696685** ●	**697885** ●
80	70	10	30	2	HW-10F	**696686** ●	**697886** ●
100	70	10	30	2	HW-10F	**696687** ●	**697887** ●
130	70	10	30	2	HW-10F	**696688** ●	**697888** ●
150	70	10	30	2	HW-10F	**696689** ●	**697889** ●

● available ex stock
□ available at short notice
Instruction manual visit www.leitz.org



Profile knives for multi-purpose cutterheads

Workpiece material:
Softwood

Cutting material:
SP

For multi-purpose profile cutterheads:
WM 502 2
WM 510 1 01
WM 510 1 02
Profiles to scale 1:1 can be found on the Leitz Homepage www.leitz.org

Knives
TM 135 1

LEN Profile	ID
1	**026101** ●
3	**026103** ●
5	**026105** ●
8	**026108** ●
9	**026109** ●
10	**026110** ●
11	**026111** ●
12	**026112** ●
13	**026113** ●
14	**026114** ●
15	**026115** ●
16	**026116** ●
17	**026117** ●
18	**026118** ●
19	**026119** ●
20	**026120** ●
21	**026121** ●
22	**026122** ●
31	**026131** ●
34	**026134** ●
35	**026135** ●
36	**026136** ●
39	**026177** ●
41	**026179** ●
45	**026183** ●
47	**026185** ●
48	**026186** ●
50	**026188** ●
55	**026193** ●
57	**026195** ●
58	**026196** ●
66	**026254** ●
68	**026256** ●
75	**026263** ●
76	**026264** ●
83	**690000** ●
84	**690001** ●
91	**690003** ●
97	**690005** ●
127	**690007** ●

Limitors
TA 300 1

LEN Profile	ID
1	**026301** ●
3	**026303** ●
5	**026305** ●
8	**026308** ●
9	**026309** ●
10	**026310** ●
11	**026311** ●
12	**026312** ●
13	**026313** ●
14	**026314** ●
15	**026315** ●
16	**026316** ●
17	**026317** ●
18	**026318** ●
19	**026319** ●
20	**026320** ●
21	**026321** ●
22	**026322** ●
31	**026331** ●
34	**026334** ●
35	**026335** ●
36	**026336** ●
39	**026384** ●
41	**026386** ●
45	**026390** ●
47	**026392** ●
48	**026393** ●
50	**026395** ●
55	**026400** ●
57	**026402** ●
58	**026403** ●
66	**026411** ●
68	**026413** ●
75	**026420** ●
76	**026421** ●
83	**695000** ●
84	**695001** ●
91	**695003** ●
97	**695005** ●
127	**695007** ●

Sold in pairs only.

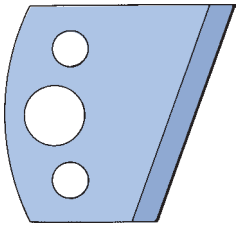
LEN 1

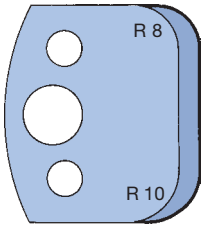

LEN 3

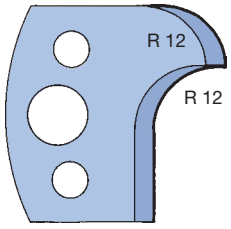

LEN 5

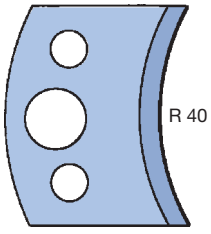

LEN 8

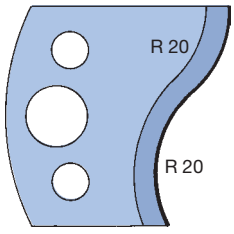

LEN 9

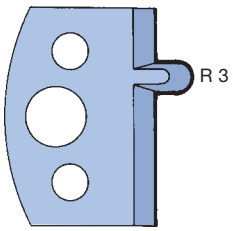

LEN 10

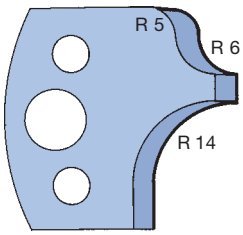

LEN 11

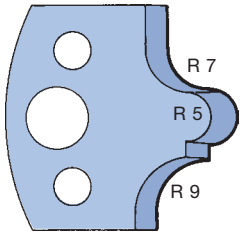

LEN 12

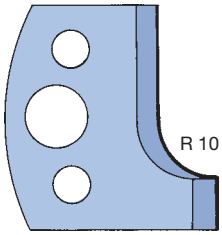

LEN 13

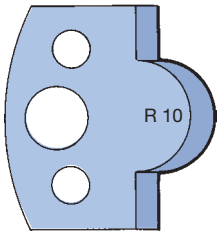

LEN 14

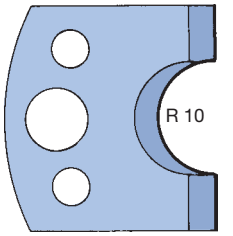

LEN 15

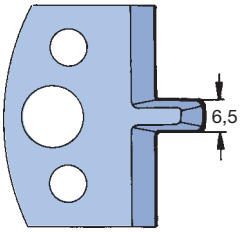

LEN 16

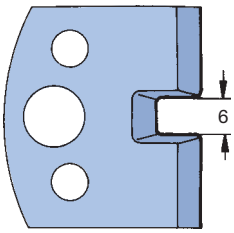

LEN 17

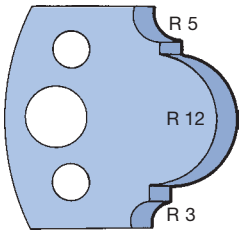

LEN 18

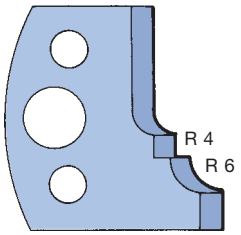

LEN 19

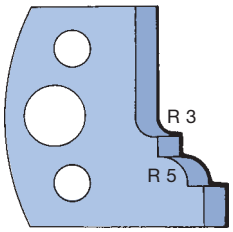

LEN 20

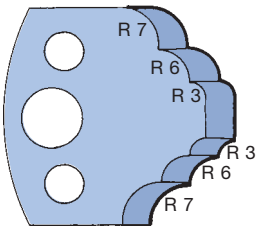

LEN 21

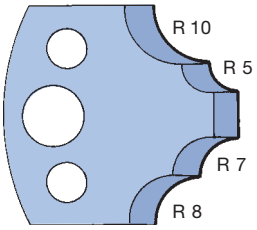

LEN 22

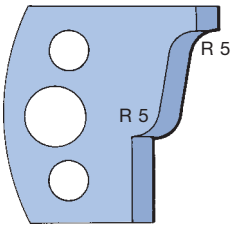

LEN 31

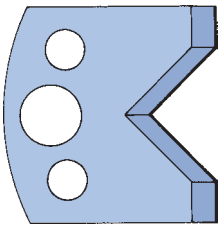
LEN 34

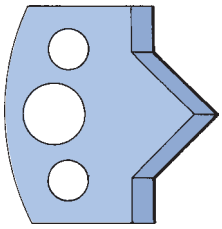
LEN 35

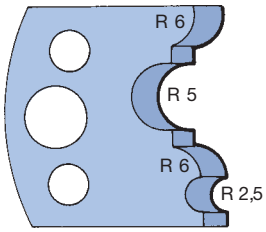

LEN 36

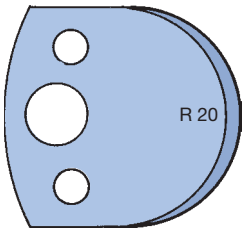

LEN 39

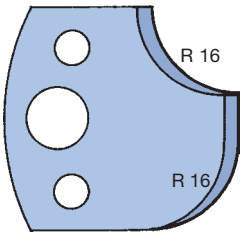

LEN 41

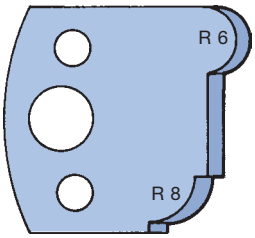

LEN 45

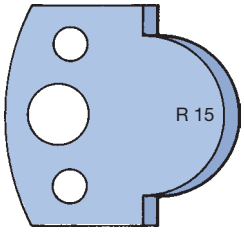

LEN 47

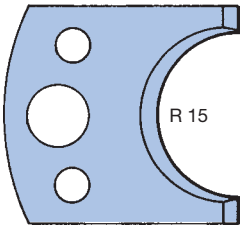

LEN 48

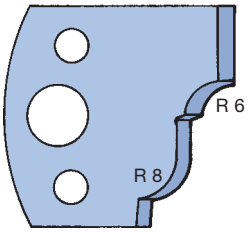

LEN 50

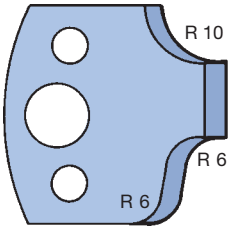

LEN 55

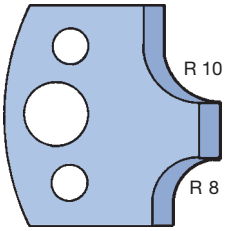

LEN 57

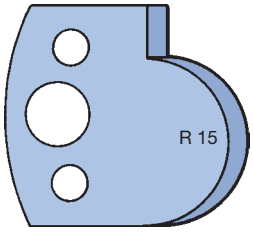

LEN 58

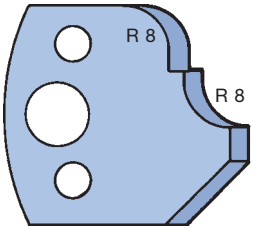

LEN 66

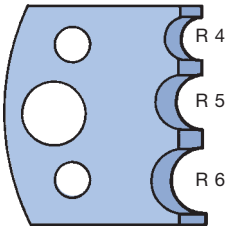

LEN 68

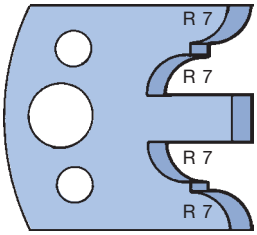

LEN 75

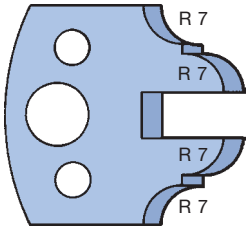

LEN 76

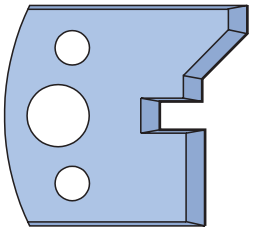
LEN 83

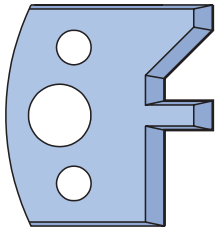
LEN 84

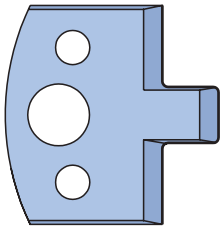
LEN 91

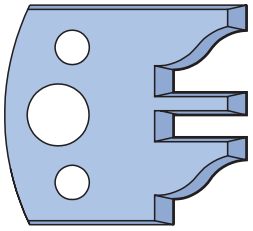
LEN 97

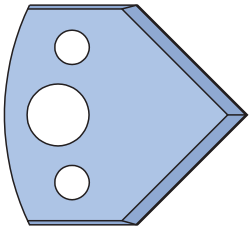
LEN 127

● available ex stock
□ available at short notice
Instruction manual visit www.leitz.org

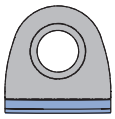

WhisperCut DP edges for hybrid tools

WhisperCut DP edges; suitable for the combination with the tool systems ProfilCut, ProFix, turnblade or HeliPlan
TM 160 0 02, TM 160 0 13

BEM	SB mm	R mm	FAW °	QAL	ID
Jointing	14			DP	**091052** ●
Jointing of glued joint*	14			DP	**091056** ●
Radius on bottom	14	1,0		DP	**091057**
Radius on top	14	1,0		DP	**091058**
Radius on bottom	14	1,5		DP	**091059**
Radius on top	14	1,5		DP	**091060**
Radius on bottom	14	2,0		DP	**091061**
Radius on top	14	2,0		DP	**091062**
Bevel on bottom	14		45	DP	**091063**
Bevel on top	14		45	DP	**091064**

* = If the knife mounted has a 0° cutting area bevel, it can be used **preferably for glued joints** due to the crown.

Replaceable knives for minifinger joint cutterheads

Replaceable knives for minifinger joint cutterheads
AT 103 0 16, AT 103 0 17, AT 103 0 18

QAL	Cut-off saws	Tip gap	Profile knife	ZL mm	TG mm	ZA PCS	SET PCS	ID
HW	without	standard	right	10/10	3,8	4	2	**611300** □
HW	without	standard	left	10/10	3,8	4	2	**611302** □
MC	with	standard	right	10/11	3,8	4	2	**611450** □
MC	with	standard	left	20/22	6,2	3	2	**611451** □
MC	with	standard	left	10/11	3,8	4	2	**611458** □
MC	with	standard	right	20/22	6,2	3	2	**611461** □
MC	with	standard	right	10/11	3,8	4	3	**611550** □
MC	with	standard	left	10/11	3,8	4	3	**611558** □
MC	with	standard	right	15/16,5	3,8	4	3	**611559** □
MC	with	standard	left	15/16,5	3,8	4	3	**611560** □



Turnblade knife

Workpiece material:
Softwood and hardwood, chipboard and fibre materials, glulam

Cutting material:
HW

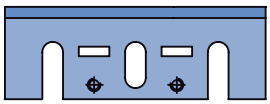

Makita

Workpiece material:
Softwood and hardwood, chipboard and fibre materials, glulam

Cutting material:
HS / HW

Planer knives for portable planers

Turnblade knives HW
TM 410 0

Machine	SB mm	H mm	DIK mm	QAL	ID
AEG, Bosch, Festool, Haffner, Holz-Her, Mafell, Metabo, Scheer	75,5	5,5	1,1	HW	**005064** ●
Elu	80,5	5,9	1,2	HW	**005131** ●
AEG, Black & Decker, DeWalt, Elu, Mafell, Makita, Metabo	82	5,5	1,1	HW	**005066** ●

Planer knife HS / HW
TM 105 0

Machine	SB mm	H mm	DIK mm	ID HS	ID HW
Makita	82	29	3	**027530** ●	**027598** ●

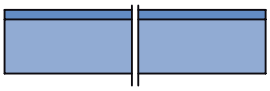

Kity

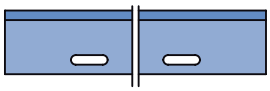

Metabo

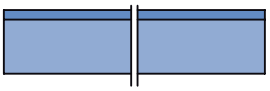

Scheppach

Workpiece material:
Softwood and hardwood, chipboard and fibre materials, glulam

Cutting material:
HS

Planer knives for semi-stationary machines

HS
TM 100 0, TM 105 0

Machine	SB mm	H mm	DIK mm	QAL	ID
Kity	260	20	2,5	HS	**027154** ●
Metabo	263	20	3	HS	**027157** ●
Scheppach	260	18	3	HS	**027158** ●

● available ex stock
□ available at short notice
Instruction manual visit www.leitz.org

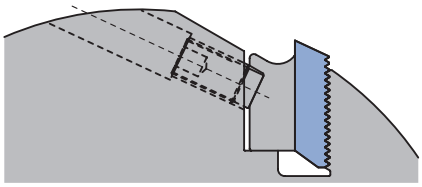

Back-serrated profile cutterheads

Filler pieces for knife thickness 8 - 10 mm
TD 510 0 05

BEZ	for SB mm	ID
Filler piece	40	**005305** ●
Filler piece	60	**005306** ●
Filler piece	80	**005307** ●
Filler piece	100	**005308** ●
Filler piece	130	**005310** ●
Filler piece	150	**005311** ●
Filler piece	170	**620770** ●
Filler piece	180	**005312** ●
Filler piece	190	**620772** ●
Filler piece	210	**620773** ●
Filler piece	230	**005313** ●
Filler piece	240	**620771** ●
Filler piece	270	**620774** ●
Filler piece	310	**620775** ●

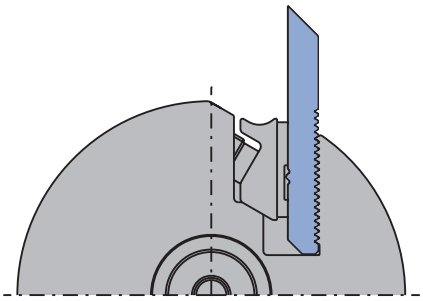

Profile cutterhead
PKS-system

Filler pieces for profiling of PKS-system backing plates
TF 200 0

BEZ	for SB mm	ID
Filler piece	40	**008355** □
Filler piece	80	**008356** □
Filler piece	130	**008357** □
Filler piece	240	**008221** ●

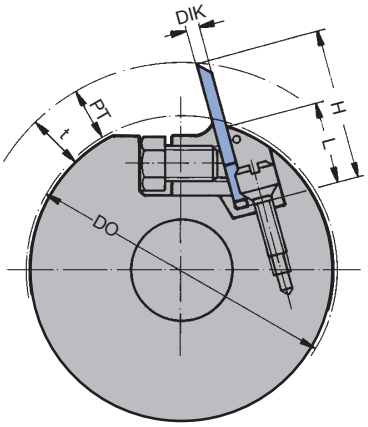

Workpiece material:
Softwood and hardwood

Cutting material:
SP / HS

Profile cutterhead WM 502 2

Profile cutterhead WM 502 2
TC 105 0

BEZ	SB mm	QAL	ID
Profile blank knife	40	HS	**007284** ●
Profile blank knife	50	HS	**007285** ●
Profile blank knife	60	HS	**007286** ●

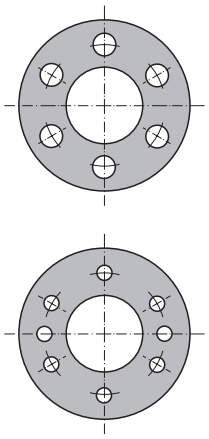

Spacers with 6+4 pinholes

Spacers with 4 pinholes

With pinholes

Spacers with 1 pitch
TR 100 0

D mm	B mm	BO mm	NLA mm	ID
45	3	20	4/5,5/32	**028088** ●
45	5	20	4/5,5/32	**028089** ●
45	10	20	4/5,5/32	**028090** ●
45	20	20	4/5,5/32	**028639** ●
45	0,1	20	4/5,5/32	**029208** ●
45	0,3	20	4/5,5/32	**029209** ●
45	0,5	20	4/5,5/32	**029210** ●
45	1	20	4/5,5/32	**029211** ●
60	0,1	30	4/7/48 6/7/48	**029237** ●
60	0,3	30	4/7/48 6/7/48	**029238** ●
60	0,5	30	4/7/48 6/7/48	**029239** ●
60	1	30	4/7/48 6/7/48	**029240** ●
60	3	30	6/7/48	**028580** ●
60	4	30	6/7/48	**028581** ●
60	5	30	6/7/48	**028582** ●
60	6	30	6/7/48	**028583** ●
60	7	30	6/7/48	**028584** ●
60	8	30	6/7/48	**028585** ●
60	10	30	6/7/48	**028586** ●
60	11	30	6/7/48	**028587** ●
60	12	30	6/7/48	**028588** ●
60	15	30	6/7/48	**028589** ●
60	20	30	6/7/48	**028591** ●
70	0,1	30	6/7/58	**027952** ●
70	0,3	30	6/7/58	**027953** ●
70	0,5	30	6/7/58	**027954** ●
70	1	30	6/7/58	**027955** ●
70	3	30	6/7/58	**028599** ●
70	4	30	6/7/58	**028600** ●
70	5	30	6/7/58	**028601** ●
70	10	30	6/7/58	**028605** ●
70	20	30	6/7/58	**028608** ●
60	0,1	35	6/7/48	**027930** ●
60	0,3	35	6/7/48	**027931** ●
60	0,5	35	6/7/48	**027932** ●
60	1	35	6/7/48	**027933** ●
60	3	35	6/7/48	**028592** ●
60	5	35	6/7/48	**028594** ●
60	10	35	6/7/48	**028598** ●
62	0,1	35	4/7/52	**028667** ●
62	0,3	35	4/7/52	**028668** ●
62	0,5	35	4/7/52	**028669** ●
62	1	35	4/7/52	**028670** ●
64	3	35	4/7/52	**028671** ●
64	4	35	4/7/52	**028672** ●
64	5	35	4/7/52	**028673** ●
70	0,1	35	6/7/58	**027966** ●
70	0,3	35	6/7/58	**027967** ●
70	0,5	35	6/7/58	**027968** ●
70	1	35	6/7/58	**027969** ●
70	3	35	6/7/58	**028609** ●
70	5	35	6/7/58	**028611** ●
70	10	35	6/7/58	**028615** ●
70	20	35	6/7/58	**028616** ●
70	0,1	40	6/7/58	**027978** ●
70	0,3	40	6/7/58	**027979** ●
70	0,5	40	6/7/58	**027980** ●
70	1	40	6/7/58	**027981** ●
70	3	40	6/7/58	**028617** ●
70	4	40	6/7/58	**028618** ●
70	5	40	6/7/58	**028619** ●
70	6	40	6/7/58	**028620** ●

● available ex stock
□ available at short notice
Instruction manual visit www.leitz.org

D mm	B mm	BO mm	NLA mm	ID
70	7	40	6/7/58	**028621** ●
70	8	40	6/7/58	**028622** ●
70	10	40	6/7/58	**028623** ●
70	12	40	6/7/58	**028624** ●
70	15	40	6/7/58	**028625** ●
70	20	40	6/7/58	**028626** ●
76,5	0,1	50	6/7/65	**028005** ●
76,5	0,3	50	6/7/65	**028006** ●
76,5	0,5	50	6/7/65	**028007** ●
76,5	1	50	6/7/65	**028008** ●
77	3	50	6/7/65	**028627** ●
77	4	50	6/7/65	**028628** ●
77	5	50	6/7/65	**028629** ●
77	6	50	6/7/65	**028630** ●
77	8	50	6/7/65	**028631** ●
77	10	50	6/7/65	**028632** ●
77	20	50	6/7/65	**028633** ●
90	0,1	60	6/9/75	**028020** ●
90	0,3	60	6/9/75	**028021** ●
90	0,5	60	6/9/75	**028022** ●
90	1	60	6/9/75	**028023** ●
90	3	60	6/9/75	**028634** ●
90	4	60	6/9/75	**028635** ●
90	5	60	6/9/75	**028636** ●
90	10	60	6/9/75	**028637** ●
90	20	60	6/9/75	**028638** ●

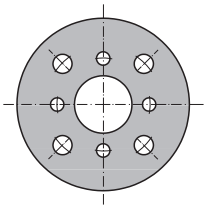

Spacers with 4+4 pinholes

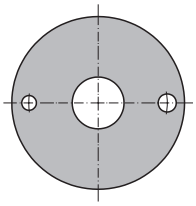

Spacers with 2 pinholes

With pinholes

Spacers with different pitches
TR 100 0

D mm	B mm	BO mm	NLA mm	ID
90	0,1	30	4/7/48 4/10/60	**028422** ●
90	0,3	30	4/7/48 4/10/60	**028423** ●
90	0,5	30	4/7/48 4/10/60	**028424** ●
90	1	30	4/7/48 4/10/60	**028425** ●
90	3	30	4/7/48 4/10/60	**028426** ●
90	5	30	4/7/48 4/10/60	**028427** ●
90	10	30	4/7/48 4/10/60	**028428** ●
90	20	30	4/7/48 4/10/60	**028429** ●
100	0,1	30	1/8,5/80 1/10,5/80	**028029** ●
100	0,3	30	1/8,5/80 1/10,5/80	**028030** ●
100	0,5	30	1/8,5/80 1/10,5/80	**028031** ●
100	1	30	1/8,5/80 1/10,5/80	**028032** ●

● available ex stock
□ available at short notice
Instruction manual visit www.leitz.org

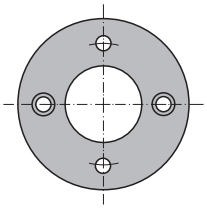

Spacers with 4 pinholes (two of them with cylindrical countersink)

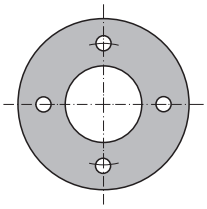

Spacers with 4 pinholes

With pinholes, aluminium

Aluminium spacers
TR 100 0

D mm	B mm	BO mm	NLA mm	BEM	ID
60	10	30	2/7/48 2/7/48	2 pinholes with cylindrical countersink	**029244** ●
64	5	35	4/7/52		**029246** ●
64	10	35	4/7/52		**029247** ●
64	10	35	2/7/52	Cylindrical countersink pinholes	**029248** ●
64	20	35	4/7/52		**029249** ●

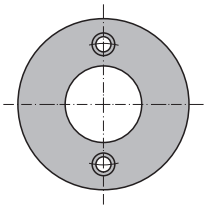

Spacers with 2 pinholes with cylindrical countersink

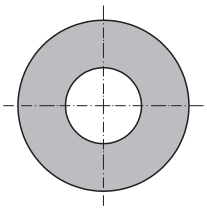

Without pinholes

Without pinholes
TR 100 0

D mm	B mm	BO mm	ID
34	0,1	20	**028400** ●
34	0,3	20	**028401** ●
34	0,5	20	**028402** ●
34	1	20	**028403** ●
34	3	20	**028404** ●
34	4	20	**028405** ●
34	5	20	**028406** ●
50	0,1	30	**027901** ●
50	0,3	30	**027902** ●
50	0,5	30	**027903** ●
50	1	30	**027904** ●
50	3	30	**027905** ●
50	4	30	**027906** ●
50	5	30	**027907** ●
50	6	30	**027908** ●
50	7	30	**027909** ●
50	8	30	**027910** ●
50	10	30	**027911** ●
50	14	30	**027912** ●
50	20	30	**027913** ●
60	3	30	**027918** ●
60	4	30	**027919** ●
60	5	30	**027920** ●
60	6	30	**027921** ●
60	7	30	**027922** ●
60	8	30	**027923** ●
60	10	30	**027924** ●
60	11	30	**027925** ●
60	12	30	**027926** ●
60	15	30	**027927** ●
60	17,5	30	**027928** ●
60	20	30	**027929** ●
60	3	35	**027934** ●
60	5	35	**027936** ●
60	6	35	**027937** ●
60	7	35	**027938** ●
60	8	35	**027939** ●
60	10	35	**027940** ●

● available ex stock
□ available at short notice
Instruction manual visit www.leitz.org

D mm	B mm	BO mm	ID
60	0,1	40	**027941** ●
60	0,3	40	**027942** ●
60	0,5	40	**027943** ●
60	1	40	**027944** ●
60	3	40	**027945** ●
60	4	40	**027946** ●
60	5	40	**027947** ●
60	6	40	**027948** ●
60	7	40	**027949** ●
60	8	40	**027950** ●
60	9	40	**028449** ●
60	10	40	**027951** ●
70	3	30	**027956** ●
70	4	30	**027957** ●
70	5	30	**027958** ●
70	6	30	**027959** ●
70	7	30	**027960** ●
70	8	30	**027961** ●
70	10	30	**027962** ●
70	12	30	**027963** ●
70	15	30	**027964** ●
70	20	30	**027965** ●
70	3	35	**027970** ●
70	4	35	**027971** ●
70	5	35	**027972** ●
70	6	35	**027973** ●
70	7	35	**027974** ●
70	8	35	**027975** ●
70	10	35	**027976** ●
70	20	35	**027977** ●
70	3	40	**027982** ●
70	4	40	**027983** ●
70	5	40	**027984** ●
70	6	40	**027985** ●
70	7	40	**027986** ●
70	8	40	**027987** ●
70	10	40	**027988** ●
70	12	40	**027989** ●
70	15	40	**027990** ●
70	20	40	**027991** ●
70	0,1	50	**027992** ●
70	0,3	50	**027993** ●
70	0,5	50	**027994** ●
70	1	50	**027995** ●
70	3	50	**027996** ●
70	4	50	**027997** ●
70	5	50	**027998** ●
70	6	50	**027999** ●
70	7	50	**028000** ●
70	8	50	**028001** ●
70	10	50	**028002** ●
70	15	50	**028003** ●
70	20	50	**028004** ●
77	3	50	**028009** ●
77	4	50	**028010** ●
77	5	50	**028011** ●
77	6	50	**028012** ●
77	8	50	**028013** ●
77	10	50	**028014** ●
77	20	50	**028015** ●
90	3	60	**028024** ●
90	4	60	**028025** ●
90	5	60	**028026** ●
90	10	60	**028027** ●
90	20	60	**028028** ●
100	4	30	**028033** ●

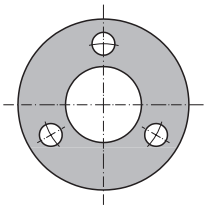

Spacers hardened and high precision for hydro and Hydro-Duo clamping sleeves to fill the clamping length.

Spacers, hardened and high precision for hydro and Hydro-Duo clamping sleeves

Spacers, hardened and high precision for hydro and Hydro-Duo clamping sleeves
TR 100 0

D	B	BO	NLA	ID
mm	mm	mm	mm	
90	10	60	3/9/75	**030684** ●
90	15	60	3/9/75	**030685** ●
90	20	60	3/9/75	**030686** ●

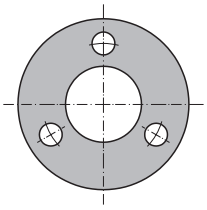

Spacers hardened and high precision for hydro and Hydro-Duo clamping sleeves to fill the clamping length.

High precision spacers for adjusting tongue and groove cuttersets

High precision spacers for adjusting tongue and groove cuttersets
TR 100 0

D	B	BO	NLA	ID
mm	mm	mm	mm	
90	3,1	60	3/9/75	**030687** ●
90	3,3	60	3/9/75	**030688** ●
90	3,5	60	3/9/75	**030689** ●
90	3,7	60	3/9/75	**030690** ●
90	3,9	60	3/9/75	**030691** ●
90	4,1	60	3/9/75	**030692** ●
90	4,3	60	3/9/75	**030693** ●
90	4,5	60	3/9/75	**030694** ●
90	4,7	60	3/9/75	**030695** ●
90	4,9	60	3/9/75	**030696** ●
90	5	60	3/9/75	**030697** ●
90	5,1	60	3/9/75	**030698** ●

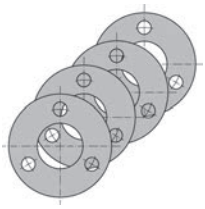

AT 100 0 01
8 part spacer set with total clamping length 125 mm, surface ground face parallel, spacers black-finished, to DIN 8837

Set consisting of:
2 pieces: B 5.0 mm
2 pieces: B 16.0 mm
1 piece: B 8.0 mm
1 piece: B 10.0 mm
1 piece: B 25.0 mm
1 piece: B 40.0 mm

Spacer sets

Set of standard cutter spindle spacers
AT 100 0 01

D	BO	ID
mm	mm	
50	30	**028381** ●
60	40	**028382** ●

● available ex stock
□ available at short notice
Instruction manual visit www.leitz.org



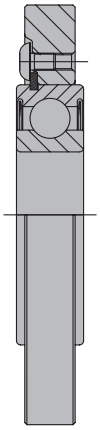

Ball bearings

Ball bearings
TL 510 0

BEZ	Type	D mm	D Ring mm	B mm	BO mm	ID
Ball bearing	A	62	min. 85	16	30	**008114** ●
Ball bearing	A	62	min. 90	16	31,75	**008142**
Ball bearing	B	80	min. 102	18	40	**008116** ●
Ball bearing	C	90	min. 112	20	50	**008117** ●
Ball bearing	D	110	min. 132	22	60	**008118**

Guide rings

Guide rings
TR 500 0

BEZ	Type	D mm	ID
Guide ring	A	85	**027826** ●
Guide ring	A	90	**027799** □
Guide ring	A	100	**027800** ●
Guide ring	A	105	**027801** □
Guide ring	A	110	**027802** ●
Guide ring	A	120	**027803**
Guide ring	A	125	**027804** ●
Guide ring	A	130	**027805** ●
Guide ring	A	140	**027806** ●
Guide ring	A	150	**027807** ●
Guide ring	B	105	**027808**
Guide ring	B	110	**027809**
Guide ring	B	120	**027810**
Guide ring	B	125	**027811**
Guide ring	B	130	**027812**
Guide ring	B	140	**027813**
Guide ring	B	150	**027814**
Guide ring	C	112	**027815**
Guide ring	C	120	**027816**
Guide ring	C	125	**027817**
Guide ring	C	130	**027818**
Guide ring	C	140	**027819**
Guide ring	C	150	**027820**
Guide ring	C	160	**027821**
Guide ring	D	140	**027822**
Guide ring	D	150	**027823**
Guide ring	D	160	**027824**
Guide ring	D	170	**027825**

● available ex stock
□ available at short notice
Instruction manual visit www.leitz.org

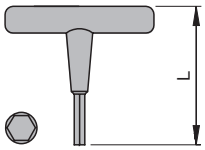

Hexagon key

Hexagon allen keys

T-handle without tenon
TH 500 0

ABM	L	ID
mm	mm	
SW 2.5	100	**005472** ●
SW 3	75	**005444** ●
SW 4	75	**005445** ●
SW 6	100	**005447** ●

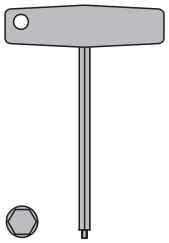

Hexagon key, with tenon

T-handle with tenon
TH 500 0

ABM	ID
mm	
SW 5	**005452** ●

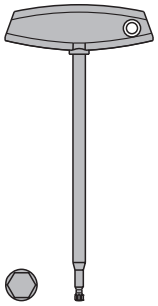

Hexagon key, for quick-change sleeve

For quick-change chuck
TH 505 0

ABM	L	ID
mm	mm	
SW 6	240	**117516** ●



Hexagon key, 90° angle

90° angle
TH 500 0

ABM	L	ID
mm	mm	
SW 5	154	**117509** ●
SW 6	172	**117543** ●

Torx® keys

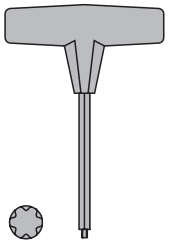

Torx® key with T-handle

T-handle
TH 500 0

ABM	L	ID
mm	mm	
Torx® 8	40	**006092** ●
Torx® 9	40	**005463** ●
Torx® 15	130	**117507** ●
Torx® 20	130	**117503** ●
Torx® 25	130	**117504** ●



Torx® key, 90° angle

90° angle
TH 500 0

ABM	L	ID
mm	mm	
Torx® 20	149	**117511** ●

● available ex stock
□ available at short notice
Instruction manual visit www.leitz.org



Torque tool set

TorqueVario®-STplus T-handle torque tool set, 11 parts
AT 199 0

BEZ	BEM	ID
TorqueVario-STplus 5-14 Nm	Bitholder 1/4 inch for bits with drive E 6.3 and C 6.3; Bits of series 7045 Torx and 7043 Hexagon in lengths 70 mm; Torx T 15 - T 20 - T 25; Hexagon SW 4 - SW 5 - SW 6 - SW 8	**009103** ●

Application:
Controlled tightening with predefined torque for changing knife tool systems

Design:
Model 5-14 Nm. Numeric torque indicator in the window scale. Steplessly controlled torque by control tool Torque Setter (included in delivery). Comfortable T-handle with soft zones for optimal torque transmission.

Precision:
±6%, based on national standards

Extra:
Delivery in stable metal box, incl. test protocol

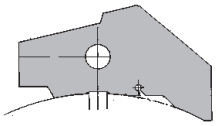

Setting gauge for hydro planerhead / planerhead wedge-type system

VN 265 0

ABM mm	ID
D163	**007989** ●
D203	**008002** ●



Setting gauge 0.3/0.8 mm



Setting gauge 1 mm

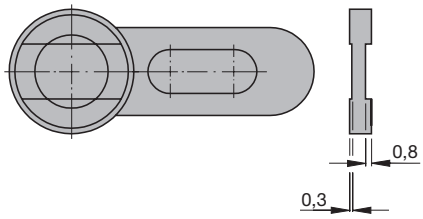

Magnetic setting gauge 0.3/0.8 mm

Setting gauge for turnblade

VN 230 0

BEZ	ABM mm	ID
Setting gauge for knives	0,3/0,8	**005374** ●
Setting gauge for knives	43x12x6	**005350** ●
Magnetic setting gauge	0.3/0.8	**005376** ●



Mounting device

VN 799 0

BEZ	ID
Mounting device for SK 30/BT30 with grooves and notches	**079000** ●
Mounting device for SK40	**079001**
Mounting device for HSK-F50	**079002** ●
Mounting device for HSK-E63 and HSK-F63	**079044** ●
Mounting device for SCM/Morbidelli ISO30	**079004** ●
Mounting device for CMS ISO30	**079005**
Mounting device for Alberti HSK-E 40	**079006**

Application:
For the assembly of shank tools in clamping chucks or tools with borehole on arbors with adaptors for automatic tool change

- Reduced risk of injury when mounting tools
- Quick clamping levers and fixing pins secure the clamped taper axially as well as against twisting

● available ex stock
□ available at short notice
Instruction manual visit www.leitz.org



Mounting device

Mounting device for tools with HSK 85 / HSK-F 63 adaptor
VN 799 0

BEZ	Machine	l mm	d mm	ID
Mounting device EASY-Hold HSK 85 WS	Weinig	30 - 310	20 - 50	**079010** ●
Mounting device EASY-Hold HSK-F 63 / HSK-E 63				**079009** ●

For quick and easy mounting of knives or tools on arbors.

Application:
For mounting saws, tools, tool sets and cutterheads



Mounting device

Clamping device for drills with 10 mm shank and clamping flat
VN 799 0

BEZ	ID
Clamping device for drill 10 mm shank	**079020** ●

Application:
For clamping drills (10 mm shank with clamping flat) when altering the length adjusting screw.

Advantages:
- reduced risk of injury when mounting the tools
- easy and stable tool clamping during mounting



Application:
For easy lifting of large circular saw blades by means of magnetic power

Lifting device for large circular sawblades

MagneticGrip Lifting device
VZ 999 0

BEZ	BEM	ID
Lifting device	10 kg load capacity	**119900** ●
Lifting device	22.5 kg load capacity	**119901** ●

For optimal lifting, 2 pcs. are recommended.

● available ex stock
□ available at short notice
Instruction manual visit www.leitz.org

Jointing stones for Leitz Marathon planer knife

FS 100 0, FS 199 0

BEZ	Machine	BEM	ABM mm	ID
Jointing stone (angular)	WACO	Colour: brown	20x15x60	**008238** ●
Jointing stone (round)	Weinig, Leadermac	Colour: grey	12x32	**008237** ●

Grinding wheels suitable for sharpening Marathon planer knives available on request.



RFID reader

RFID reader
FZ 999 0

BEZ	ABM	ID
RFID Reader	130x12	**081550** ●

Application:
For reading data from tools with RFID data chip.

- RFID air interfaces 13,56 MHz
- Standards ISO 15693 and ISO 14443
- Operating distance 0-40 mm
- HOST Interface USB 2.0
- Cable length 1,5 m

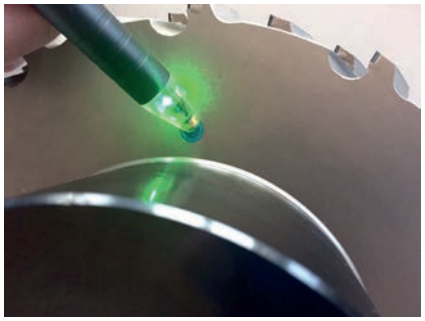

● available ex stock
□ available at short notice
Instruction manual visit www.leitz.org

Key to pictograms


Sawing, multiple cut


Sawing solid transparent plastic


Copy shaping


Slotting


Profiling


Mechanical knife clamping, adjustable - serrated


Resharpenable cutting face


Sawing, thin kerf


Sawing hollow metal


Rebating

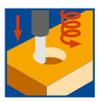
Spiral boring


Profiling joints


Mechanical knife clamping adjustable - plane


Resharpenable clearance face


Sawing, horizontal


Sawing crosscut metal


Bevelling


Non-axial boring


Mortising



Mechanical knife clamping, re-sharpenable and constant diameter



Low noise


Sawing along grain


Scoring, top and bottom


Panel raising


Plug cutting

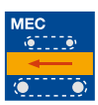

Mechanical feed


Spindle without twist protection



Optimised chip flow


Sawing across grain


Scoring, hogging


Profiling


Carving



Manual feed


Spindle with anti-twist keyway



Alloyed tool steel


Sawing, universal


Hogging


Profiling joints


Grooving, sizing


Solid metal tool

Spindle with anti-twist hexagon

High-alloyed tool steel

Scoring, sawing

Double hogging

Profiling tongue and groove

Finish sizing

Tipped tool

Hydro clamping system - open

High-speed steel

Scoring and sawing stacks

Hogging, folding

Planing

Grooving, horizontal and vertical

Special body alloy

Hydro clamping system - closed

Stellite™

Sawing hollow sections

End trimming

Planing, profiling

Jointing

Light alloy body

Hydro-Duo (bi-directional) clamping

Tungsten carbide

Sawing, honeycomb panels

Edge trimming

Drilling blind holes

Copy shaping

Inter-changeable knives

Hydro clamping arbors

Poly-crystalline diamond (PCD)

Sawing plastic single

Grooving, horizontal and vertical

Drilling, through holes

Rebating

Mechanical knife clamping, reversible

Hydro clamping

Mono-crystalline diamond (MKD)

Sawing plastic stacks

Grooving honeycomb panels

Step drilling

Bevelling

Centrifugal knife clamping, reversible

Shrink-fit clamping

Carbide metal coating

Sawing hollow transparent plastic

Jointing

Counter-sinking

Panel raising

Mechanical knife clamping, non-adjustable

Quick clamping system

Diamond coating

www.leitz.org

SDZ/MA 01/2025 Subject to changes prior to technical developments. © Leitz GmbH & Co. KG

Services

Leitz Lexicon Edition 7



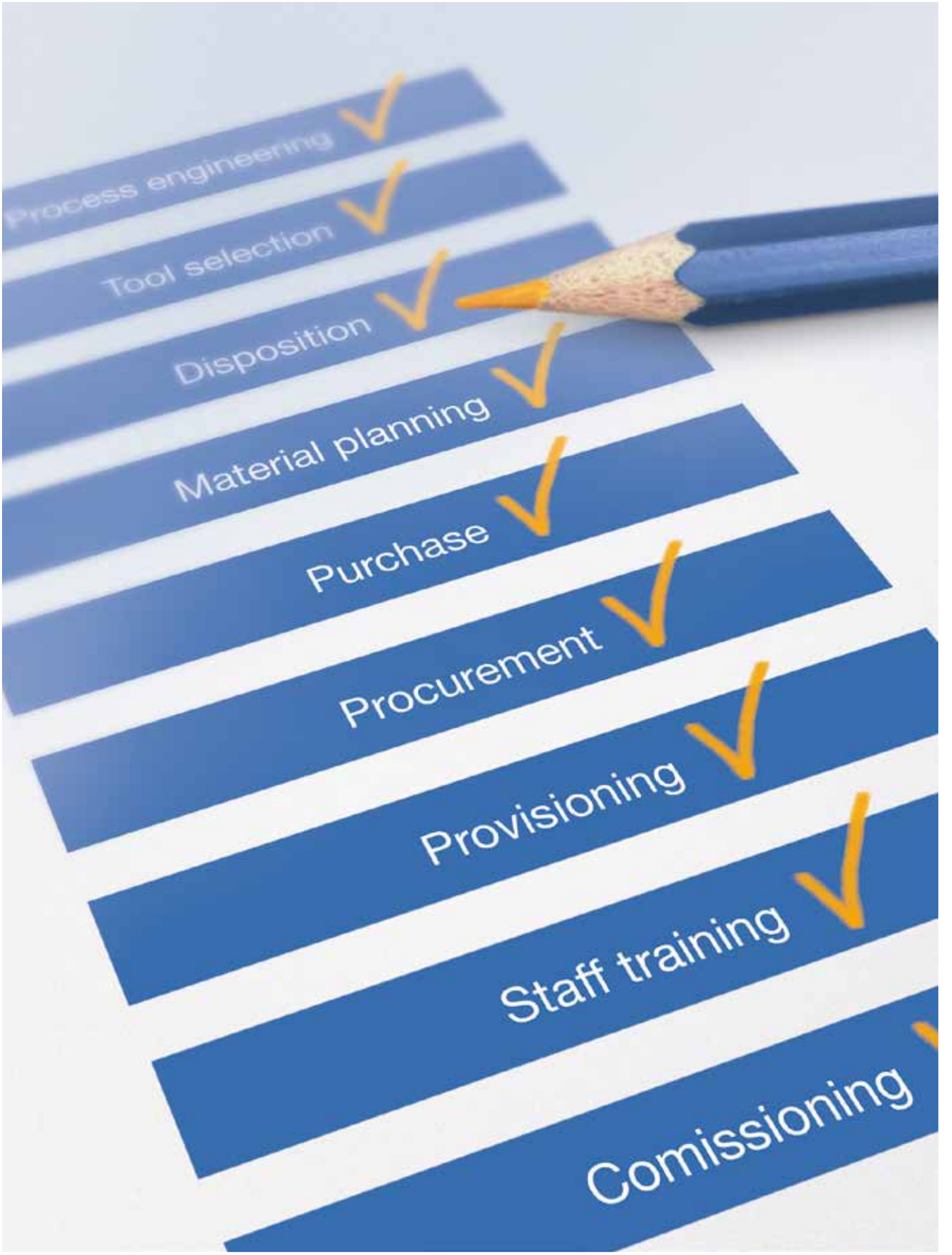
Process engineering
Tool selection
Disposition
Material planning
Purchase
Procurement
Provisioning
Staff training
Comissioning

9. Services



9.1 Sharpening of tools 2



9.2 Tools with data chips 5



9.3 Leitz Tool Management 6



9.4 Technology and process consultancy 8



9.5 Training 9



9.6 Mounting and commissioning tools 10

Service in maximum precision



Tools as new – this is based on the philosophy of maximum performance and near perfect processing quality during the total life cycle of our products. Thereby, our tool service plays a decisive role. In compliance with the optimum quality standards, we have brought Leitz Service to achieve absolute precision.

Professional maintenance



Used tooling quite often means uneven wear. This sometimes causes damaged or even knife breakage. In this case we repair your tooling exclusively with the original spare parts and original production techniques – result being for tools as good as on the very first day!

Uniform quality standards



No matter where in the world you make use of our service, you can rely on our total quality standards. We develop these standards on the basis of intensive research and development in our company headquarters. Therefore we can ensure that all Leitz sites worldwide provide optimal service quality at all times.

Tools as new



In our service stations we use the same machinery and programs as in our tool production. Therefore our tools provide consistent top quality and efficiency – whether they are brand new directly from our production plant or resharpened from the service station.

Service for all types of tools



Stacking all of the circular saws which we sharpen every year, we would have a tower nearly ten kilometres high. Our service stations not only accept circular saw blades, collectively more than tens of millions of further tools are serviced per year. With that, globally, we are by far the biggest service provider for tools in the wood and plastic processing sectors.

Extensive network

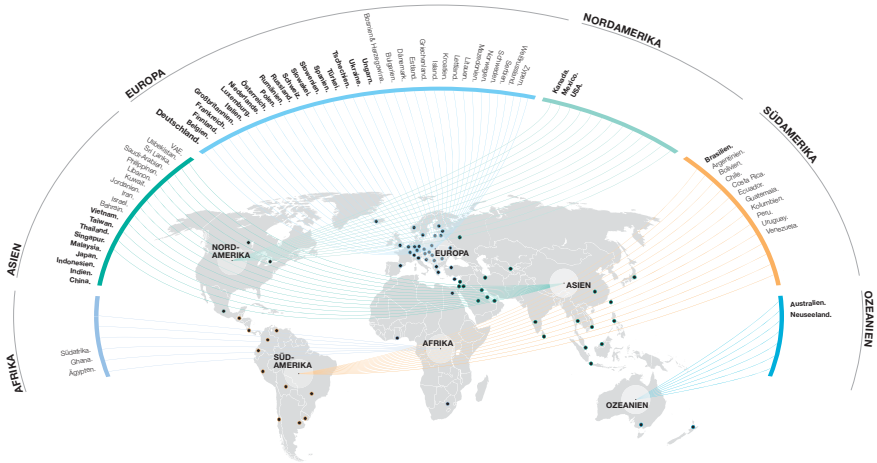

Globally we are represented in 36 countries with our own company sites. There are hardly any areas on the planet where we are not close to our customers. In all these countries, we have our own service stations also. Today, more than 100.000 customers trust in Leitz Service – become one of them.

Chip coding





A microchip in the tool or clamping interface is coded with all the relevant tool geometry and safety data. The microchip is identified and read by the machine without contact. Besides reducing set-up time, this technology also improves operating safety.

Chip-coding-hardware

Chip-coding-software and a PC work station are necessary for operation.

Description	ID
Data-transmission-package for Balluff Data chip, consisting of: Read-/write head, power pack and PC-connecting cablel	**081305** □
Balluff writing and reading head casing for HSK 63 F interfaces	**081324** □

Chip-coding-software
For coding and decoding data chips

Description	ID
Chip-coding-software	**081351** □

Data-chip-conversion

Description	ID
SK 40 draw bolt with data chip Balluff	**081601** □
Chip-mounting-unit Balluff for bores Ø 12 x 6 for HSK interfaces, 511 Bytes	**081309** □
for HSK interfaces, 2047 Bytes	**081330** □

Data chips mounted by Leitz.

The right tool, the right quantity, the correct quality on time and on site – tasks to be monitored to keep your production running. These non-value-adding activities absorb time and resources, both would be better used on other activities.

When it comes to supplying tools, Leitz has international experience and can give you a customised tool management system. Demand for tools and the money spend on tools are reduced as the tools are easy to locate and replacement tools ordered on time through the automated systems. Controlling the tool life and run time aids tool cost control and process cost calculations.

Use Leitz Tool Management, according to requirements and complexity in different stages.

Leitz Tool Management Logistics





Logistics includes IT supported tool management process with Kanban- or consignment store. One of the special features is the access via internet for the customer and Leitz to a common data base. Invoicing is based on either a stock receipt or stock requisition.

Your advantages:
- Increased production reliability
- Detailed stock information
- Simple ordering process
- Cost optimisation

Leitz Tool Management Life



Life includes invoicing per service cycle and corresponding tool usage.
This means a direct link between production quantities and tooling costs.

Your advantages:
– No capital commitment for tools
– Very low indirect tool procurement costs
– Tool costs correlate with the production quantity
– High machine availability
– History for each tool

Leitz Tool Management CompleteCare





CompleteCare includes the complete package for the whole tool supply from one source. Standardised requirements in high-volume production and invoicing based on per unit produced.

CompleteCare – a package with precise costs so you can concentrate on your core business. Leitz would like to show you our skill in optimising your processes. It's a fact, tooling costs account for less than 1 % of your total costs, but not having the tools available can have a dramatic impact on costs, and these costs are much higher than those of the tools.

Your advantages:
– Continuous cost per invoicing period
– Fixed tool costing for the produced product
– Variable tooling costs based on production volume
– Process optimization and continuous technological improvement

CompleteCare is not a short term project but a long-term partnership offering mutual benefits. Many customers worldwide already have positive experience with CompleteCare and benefit from a partnership with us.

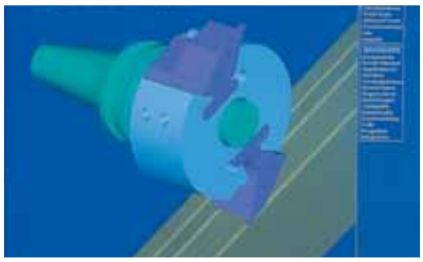



Every day our engineers and technicians are faced with varying production challenges. To help you meet these and be competitive in the future, we can show you how to optimise and achieve economic processing solutions. We offer you this service either on projects, specific applications or complete production processes. Of course at all times confidentiality is guaranteed, and the solutions are designed to meet your needs and requirements.

Leitz has the know-how and our engineers make for you proposals for cost and quality improvements.

We will also help raise your employees level of knowledge. Training and training workshops give you and your employees information on the latest developments in woodworking technology.
Ask us for our support!



Introduction of innovative methods and tools.

Description	ID
Product workshop – window manufacturing	**082200**
Product workshop – parquet manufacturing	**082201**
Product workshop – furniture manufacturing	**082202**
Product workshop – woodworking	**082203**
Process workshop – window manufacturing	**082204**
Process workshop – parquet manufacturing	**082205**
Process workshop – furniture manufacturing	**082206**
Process workshop – woodworking	**082207**
Process optimisation – window manufacturing	**082208**
Process optimisation – parquet manufacturing	**082209**
Process optimisation – furniture manufacturing	**082210**
Extraction systems optimisation	**082211**

Charges exclude travelling and consultancy costs.



Products and technologies are becoming ever more alike because of the nature of work. Developing competitive advantages today depends more and more on knowledge and motivated employees.

Even so high-tech tools will only perform at their best if used and set up correctly. Part of the Leitz Service program is educating and training customers and their employees in tooling and tooling applications. Training can either be at Leitz or in-house.

In addition to basic information on the technical, design and metallurgical characteristics of tools, advice is given on their suitability for specific applications. Information is also given on expected performance, comparison with other types of tools and cutting materials plus instruction on how to handle and maintain tools.

Many benefits come from the operator training program. It helps them control and monitor the process conditions and parameters, identify factors detrimental to performance and faults that may arise in the process.

Description	ID
Tool application – windows	**082100**
Tool application – parquet flooring	**082101**
Tool application – furniture	**082102**
Tool application – woodworking	**082103**
Tool handling – window	**082104**
Tool handling – parquet flooring	**082105**
Tool handling – furniture	**082106**
Tool handling – woodworking	**082107**

Charges exclude travelling and consultancy costs.



There's much work in commissioning a new production line – the investment has been made and you want the return on that investment as quickly as possible.

Tools play a significant part in the success of the project.

Here Leitz Service can play its part. We will have already supported you when we designed the tools and when the product or production line was run for the first time. This way we ensure you achieve your performance expectations.

You deserve only the best.

Name	ID
Mounting and putting into operation	**082400**

Excluding travel expenses and charges.

Notes

Notes

www.leitz.org

SDZ/MA 10/2017 Subject to changes prior to technical developments. © Leitz GmbH & Co. KG

Profile tool systems

Leitz Lexicon Edition 7





10. Profile tool systems

10.1 Overview of profile tool systems 2



10.2 ProFix constant tool system 3
10.2.1 ProFix-Plus 3
10.2.2 Range of applications 12







10.3 ProFix C constant tool system 14



10.4 ProfilCut Q throwaway knives 16
10.4.1 ProfilCut Q 16
10.4.2 ProfilCut Q Premium 20
10.4.3 ProfilCut Q Diamond 25
10.4.4 ProfilCut-Plus 29







10.5 VariForm Universal profile tool systems 30

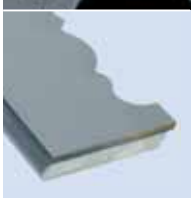

10.6 PowerKnife System PKS® 34

Profiling with Leitz: The perfect solution for every application

The market requirements for profile tool systems are diverse. On one hand, high numbers of the same parts, on the other small batches of customised products. A company cannot be expected to have a complete tool set for each profile, even less if the tool service life exceeds the life of the profile. The right tools are needed for efficient production. Whether windows, doors, furniture boards or panels – Leitz provides you with the perfect solution for every application.

Field of application and features	ProFix-Plus	ProFix F	ProFix C	ProfilCut Q, ProfilCut Q Premium	ProfilCut Q Diamond	ProfilCut-Plus	Vari-Form	PowerKnife System PKS®
Preferred applications	Furniture, windows, doors, panels, glue-joint profiles	Furniture, windows, glue-joint profiles	Windows, doors	Furniture, windows, doors, panels	Advanced Materials, furniture, windows, doors, panels	Furniture, windows, doors, panels	Furniture, panels	Panels, mouldings
Prototypes, samples, small series							•	•
Small and medium series				•	•	•	•	•
Medium and large series	•	•	•	•	•	•		•
MAN feed for spindle moulders				•	•	•	•	
MEC feed for continuous feed and machining centres	•	•	•	•	•	•	•	•
Multi-purpose profiles	•	•					•	•
High-speed delivery programs for customised profiles				•			•	•
Sharpenable	•	•	•		•	•	•	•
Diameter and constant profile	•	•	•	•	•			
Set tools with staggered cut for processing suitable material	•		•	•	•	•		
Aluminium design	•	•	•	•	•	•		
Combinability with other Leitz tool systems	•	•	•	•	•	•		

ProFix-Plus

The high-performance profile tool system for industrial applications. Lowest operating costs for high volumes. Can be resharpened with constant profile and constant diameter. Highly precise repeatable process, hence no adjustment after knife replacement.

ProFix F

Combination with planing cutterhead. Free choice of axial position. Multi-purpose tool body.

ProFix C

Complementing the resharpenable ProFix-Plus constant tool system for slot and tenon joints and as counter profiles.

ProfilCut Q, ProfilCut Q Premium

Multi-functional profile tool system for a perfect finish. Standardised clamping system for profile and turnblade knives.

ProfilCut Q Diamond

Combination of an aluminium tool body and resharpenable diamond profile knives with constant diameter.

ProfilCut-Plus

Sharpenable version of ProfilCut, but not constant in profile or diameter.

VariForm

Modular profile tool system for all applications with excellent value-for-money-ratio. For prototype, individual or small series production.

PowerKnifeSystem (PKS®)

The compatible tungsten carbide knife system for multi-purpose cutterheads with serrated back knives.

More efficient, more powerful, more multi-purpose

ProFix-Plus is unique worldwide. A system leaving nothing to be desired.

Using the same knives in several tool bodies allows production of exactly the same profile on continuous and stationary machines. The possibility to quickly change any profile in one body enables production of repeat profiles on the same line efficiently.

The construction design principle – resharpenable knives yet with the same profile – make tool dimension measurements and machine setting adjustments unnecessary. Production instead of proving.

ProFix-Plus is a pace-setting solution of the future. Its system variability offers technical, quality and economic advantages in production of panels, doors, windows, staircases and furniture, and interior and external construction.



The unique construction design principle

ProFix is different from all other multi-purpose profile tools. Its unique profile and diameter precision are guaranteed, despite repeated sharpening and varying knife thicknesses from the beginning to the end of its life. The patented slot guides the knife to the face stop and is clamped in place when the sharpened knife is inserted into the tool body.

The knives are securely fixed in the tool body T-slot and clamped radially by the centrifugal force.

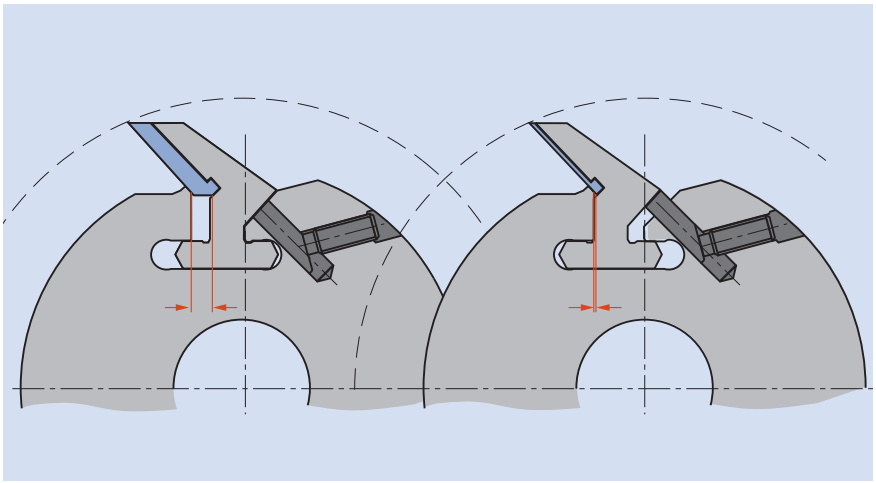

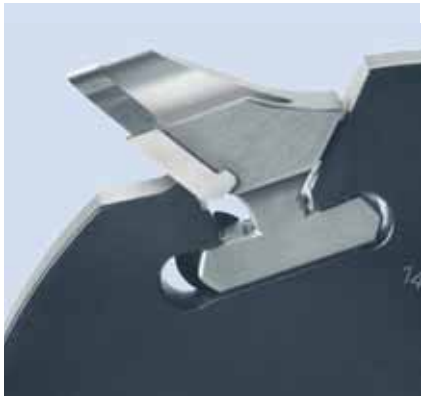

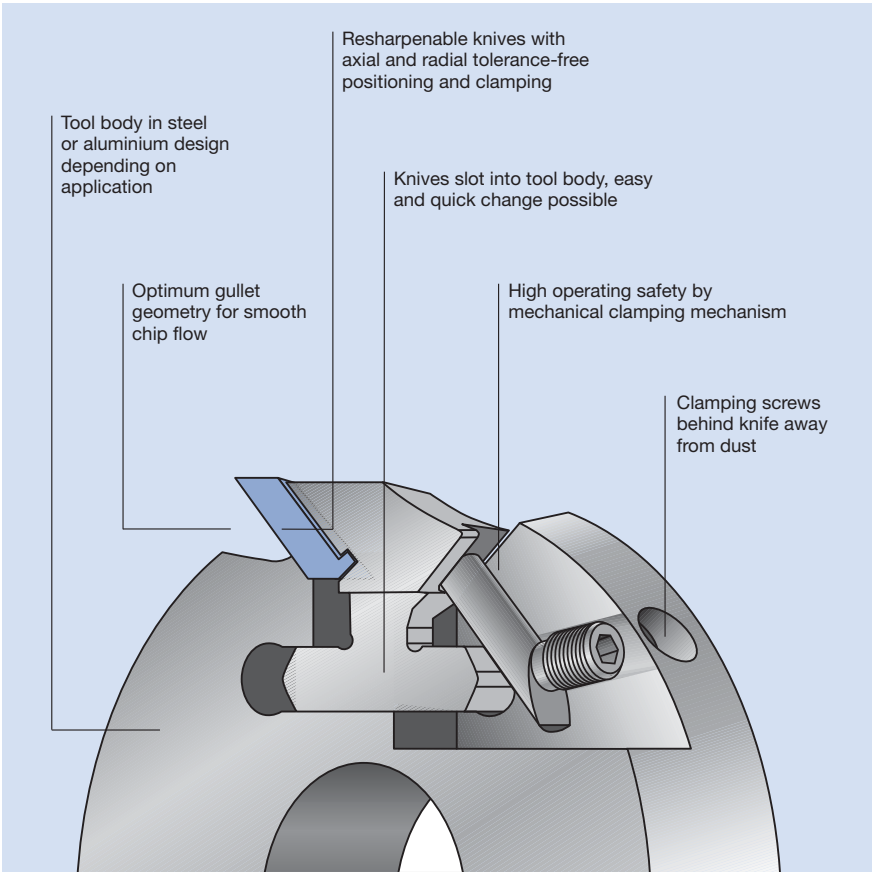

The exemplary variability…

Only a small selection from the wide range of products possible with the modular Profix-Plus system. Same knives with different cutting geometries, used in several tool bodies depending on the type of machine allow for a diversity; no other tool system can offer such high efficiency. The basic principle of technology and multi-purpose and the design spectrum fulfil the customer requirements for cutting geometries and cutting materials matched to the needs of shape and specific materials.

ProFix-Plus enhances the manufacturing options and, at the same time, reduces production processes and set-up times. Last but not least, ProFix-Plus improves the processing quality and increases the overall efficiency.



ProFix knives are available as PF 20 profile depths up to 20 mm, and as PF 25 profile depths up to 25 mm. The cutting widths range from 12 mm to 120 mm. Depending on the application different cutting angles are available:

25° for softwood and cross grain processing
20° for hardwood and mixed wood processing
15° for panel materials and for splintery wood.

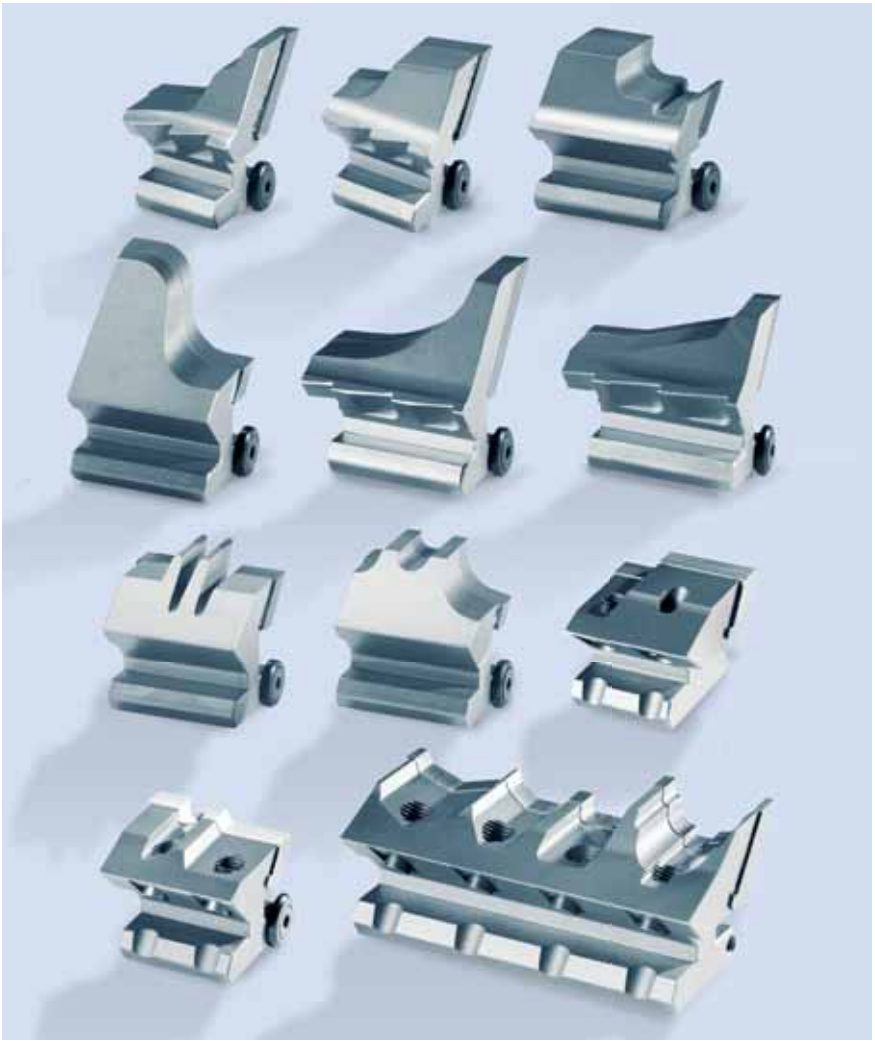

…and easy handling

The ProFix-Plus system is characterised by ease of use and product quality!
The advanced ProFix-Plus profile knives give excellent cutting quality. The special Leitz reptile ground finish, with the polished finish cutting face, produces razor-sharp cutting edges.

The knives can be resharpened. No setting gauges or special tools are required to change the knives. Machine corrections, usually necessary after resharpening, are a thing of the past. ProFix operators do not need a projector to measure the tools. Test pieces to check the workpiece dimensions are no longer necessary. Production instead of proving.

Loosen the clamping screw, remove and re-insert the knife. Tighten the clamping screw – the knife change is completed quickly and precisely.



The ProFix-Plus knife for profile depths of 20 and 25 mm. Reptile ground finish and mirror finish cutting face result in razor-sharp cutting edges.





ProFix F – for greater flexibility

The supplement F means increased flexibility. New ProFix profile knives in different tungsten carbide qualities allow for varying cutting widths up to 100 mm in one tool body. Moreover, the profile knives can be positioned any place on the tool body. The profile construction based on a constant zero diameter reduces machine set-up after profile change.

ProFix F is the perfect solution for any four-sided moulder applications, double-ending tenoner or stationary overhead routers with frequently profile changes.



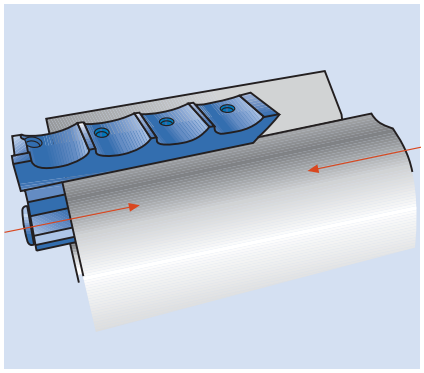

Knife insertion in the machine possible from left or right.



ProFix F incorporates a VariPlan moulding cutterhead, e.g. of manufacturing door frames of different widths etc.

ProFix reduces the tool changer

Compared to conventional profile cutterheads made to a unique profile, ProFix reduces the number of tools in the magazine. Only profile knives instead of complete tools are required. The design allows for precise profile replacement in the tool without set-up or measuring.

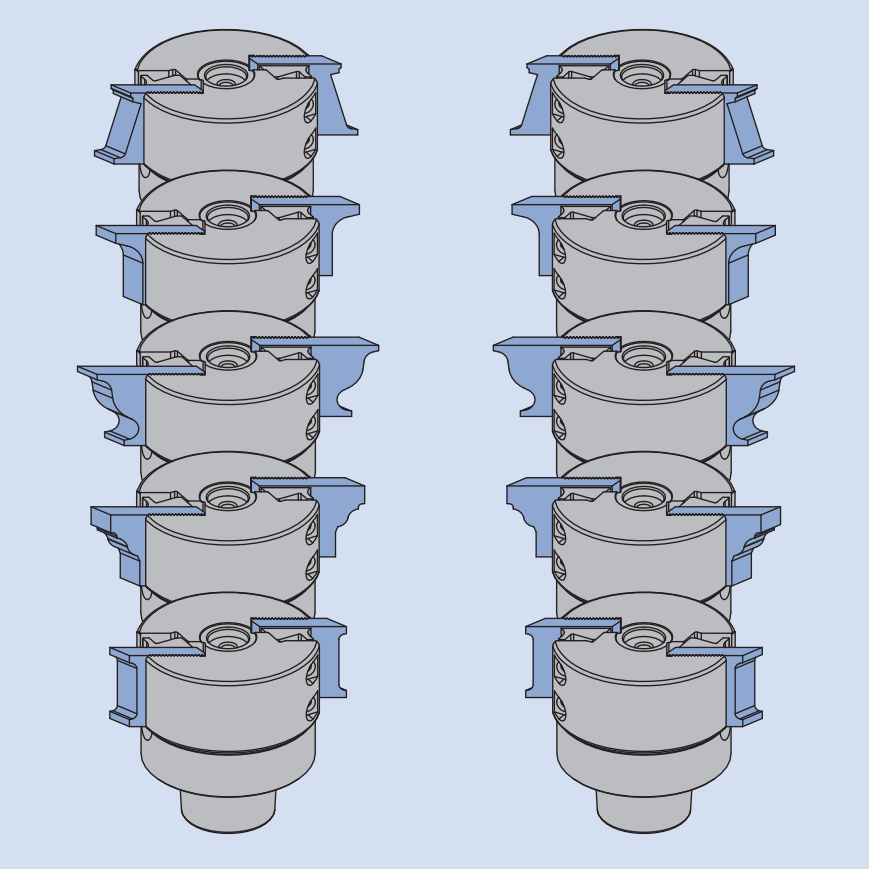

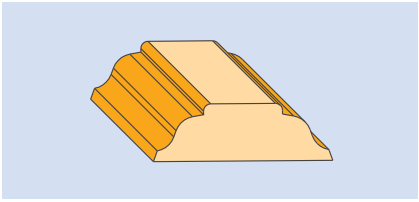

Example strip production:
Stockage of ProFix profile knives instead of complete profile tools.

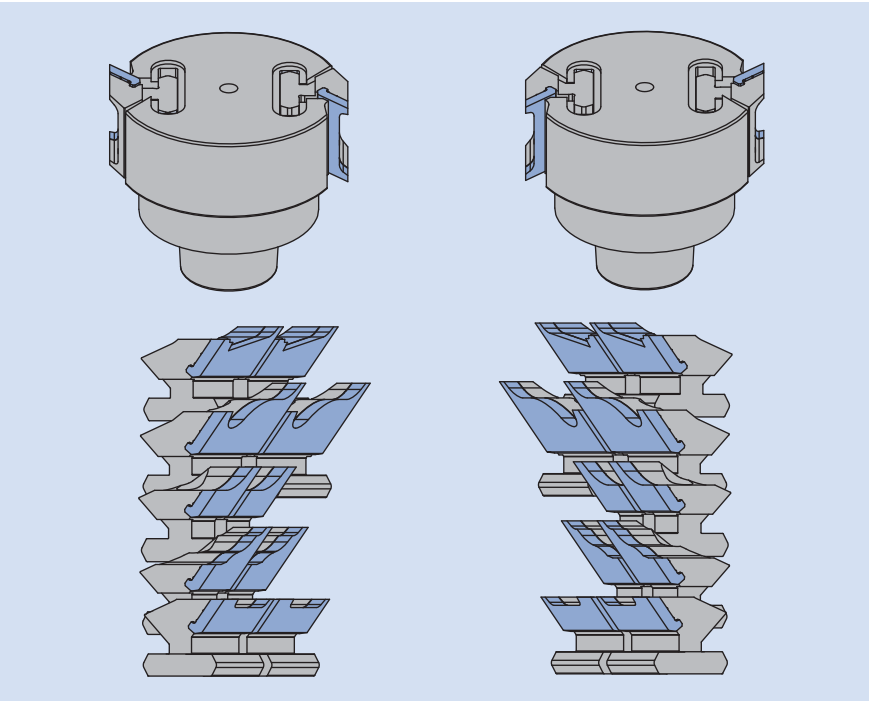

ProFix-Plus Overview

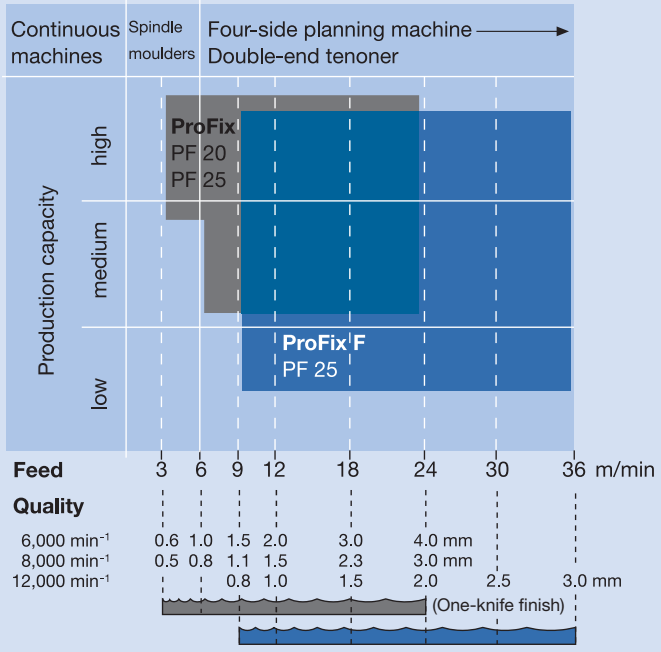

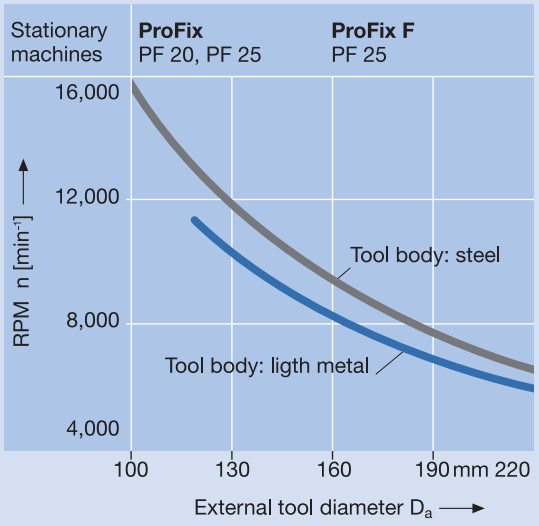

Performance data		ProFix PF 20		ProFix PF 25	ProFix F
	Unit	Tools with shank	Tools with bore	Tools with bore	Tools with bore
Profile depth max.	mm	20	20	25	25
Cutting width min./max.	mm	12-45	12-80	12-100	20-100
Sharpening range	mm	4	4	5	5
Cutting speed max.					
– steel tool body	m/s	80	80	80	80
– aluminium tool body	m/s	–	70	70	70
Concentricity	mm	0.05	0.05	0.05	0.05
Cutting angle min./max.		15°-25°	15°-25°	15°-25°	15°-25°
Shear angle from/to		0°	0°-20°	0°-25°	0°
Side relief angle		0°	0°	0°	0°
Angular knife seating		–	8°	8°	–

Applications

For processing all common materials, including solid wood, panels and compound materials, as well as complete synthetic materials.

For producing panels, furniture, doors, windows and staircases interior and external construction.

On all machines, CNC overhead routers and machining centres, four-sided moulders, hydro moulders, double-end tenoners.

Special features

Only multi-purpose tool system with resharpenable profile knives and guaranteed profile and diameter constancy.

Repeatable profile manufacture without tool measurement, test cutting or machine adjustment.

High overall efficiency.

The conclusive efficiency …

The diagram shows the efficiency of the ProFix-Plus system compared with conventional profile tools without resharpening. Basic features of both tool system are a diameter of 180 mm, a cutting width of 40 mm and 4 knives.

Whilst the conventional profile tools requires 15 replacement tips, ProFix can sharpen fifteen times in the same period. The minimum thickness of the ProFix-Plus knives is generally reached only after the fifteenth sharpening when a new set of knives are required.

The comparison confirmed in practice, shows a cost reduction of 30 %. Given the increasing competition and pressure on costs, this represents an economic advantage clearly attributed to ProFix-Plus.

ProFix-Plus tool body
ProFix-Plus Sharpened knives
ProFix-Plus sharpening

Profile cutterhead
Replacement profile tips

Development of tool costs by time



Reduction in set-up time with ProFix-Plus by measurement constancy

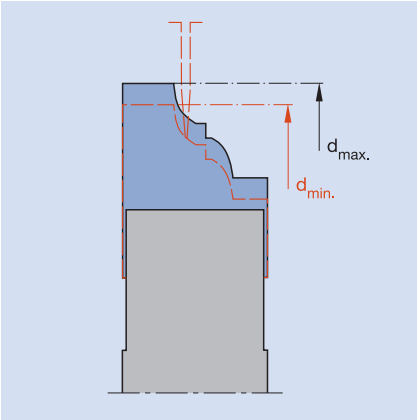

Conventional profile cutterheads change in profile and diameter after every resharpening
– unproductive set-up time
– Adjustment of spindles
– Test pieces

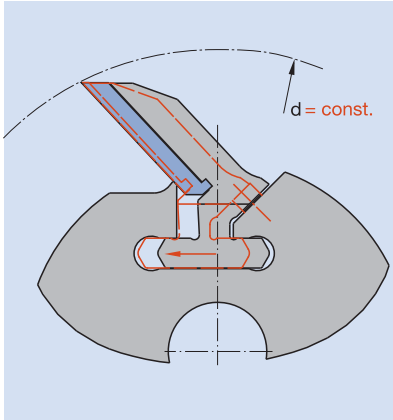

ProFix-Plus constant tools with memo function for profile and diameter
– measurement constancy for entire service life
– no tool measurement
– production without test pieces

Relation of the profile diversity to the tool costs

The same efficiency is achieved by comparing the cost subject to increasing profile diversity. If different profiles are manufactured frequently, not only different knives, but different tool bodies are required for conventional profile tools. This results in significantly higher costs of conventional systems. Already after three different profiles, the investment savings clearly speak in favour of ProFix-Plus and against conventional tools.

… and the environmental compatibility

Last but not least, a comment on the environmental impact. The consumption of high-quality cutting material used in conventional, non-resharpenable tool systems is seven times higher than ProFix-Plus.

And, moreover, if a new tool body is required for each new, non-resharpenable profile, demand for steel or aluminium material increases.

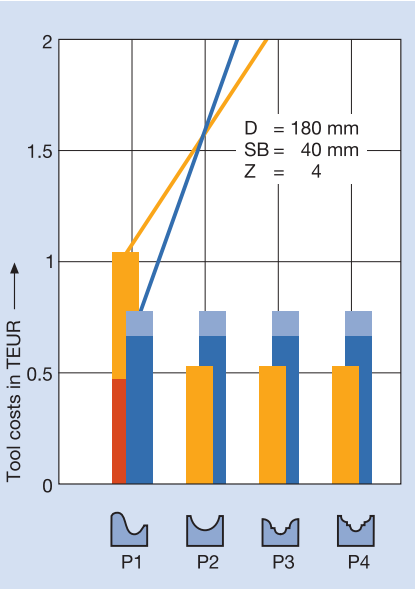

ProFix-Plus tool body
ProFix-Plus resharpenable knives

Profile cutterhead
Throw-away profile knife

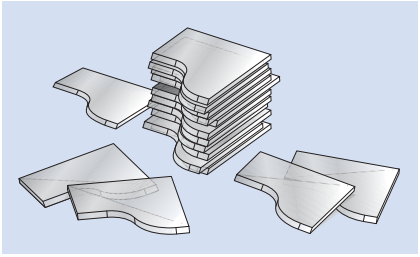

16 conventional knife sets
(Z 4) = 3.6 kg

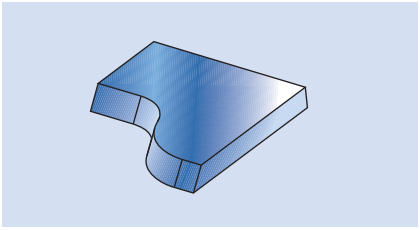

1 ProFix-Plus knife set (Z 4) = 0.54 kg

All-out efficient!

ProFix is combinable with the throw-away knife system ProfilCut. From this result unbeatable advantages e.g. in the window production:
Main profiles with high production quantity or profile areas within a tool which require design freedom, are designed in ProFix. Low-importance profiles with low production quantity are designed in ProfilCut. Thus you don't have to make any compromises regarding to the efficiency.





Application information

Example: Usable profile area of ProFix PF 20

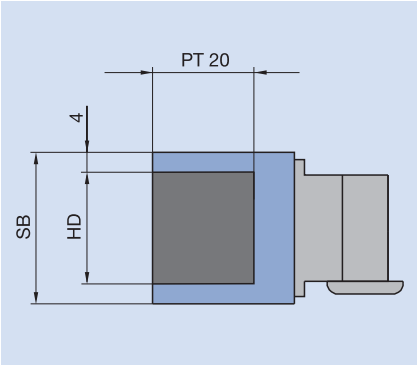

Cutting angle

The cutting angle is chosen depending on the machining requirements and the material to be processed.
Cutting angle 25° for softwood.
Cutting angle 20° for hardwood.
Cutting angle 15° for panel materials.

Shear angle (chip clearance relief)

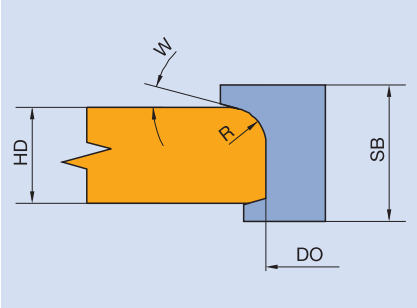

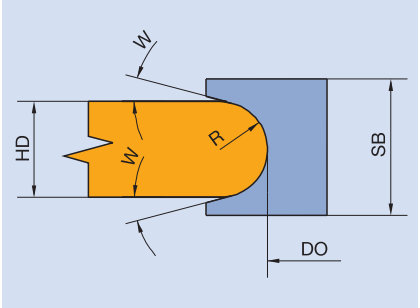

0° shear angle for all closed profiles such as e.g. round profiles, profile relief at least 10°.

With shear angle top cutting first

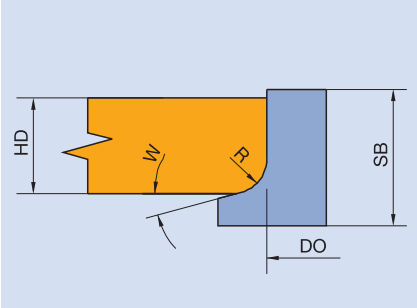

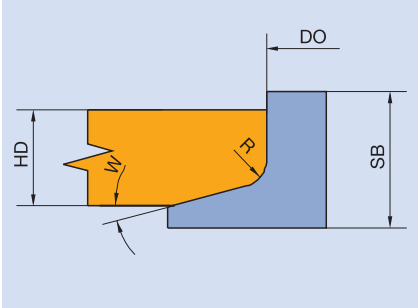

Shear angle top or bottom cutting first for all profiles open on one side with straight jointing edge and profile relief of at least 10°.

With shear angle bottom cutting first

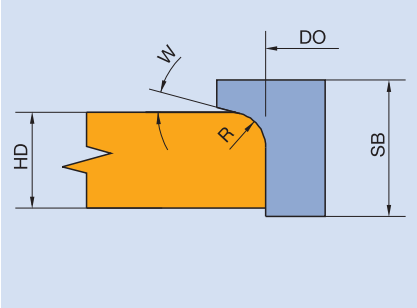

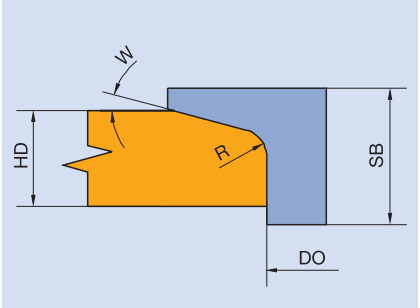

Knife seating 8° inclined, bottom cutting

Shear angle and knife seating 8° inclined for all profiles without profile relief.

Please note:
ProFix knives do not have a radial lateral clearance angle! The knives are mounted in an inclined position for profiles without lateral profile relief. For closed profiles without profile relief the knives are mounted inclined alternately at the top and at the bottom.

One tool in Z 2 has Z 2 + 2, i.e. 4 knives on the tool periphery.

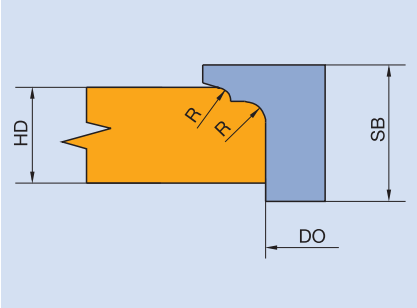

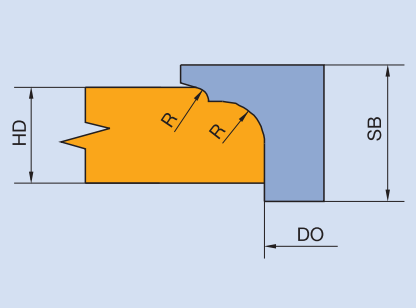

Knife seating 8° inclined, top cutting

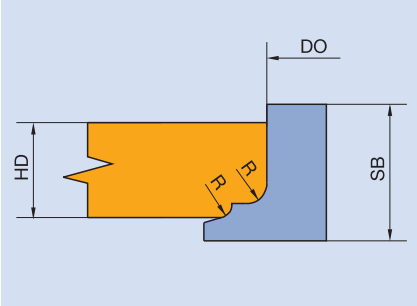

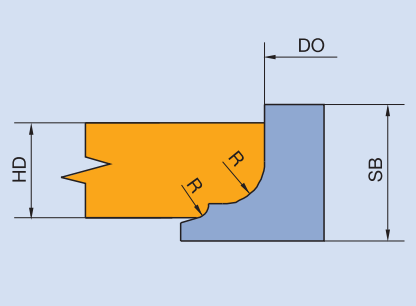

Minimum zero diameter depending on Z 2 – Z 10

number of teeth	PF 20 with shank	PF 20	PF 25	ProFix S	ProFix F
Z 2	56 mm	80 mm	116 mm	160 mm	100 mm
Z 3		80 mm	116 mm	160 mm	100 mm
Z 4		95 mm	128 mm	160 mm	125 mm
Z 6		150 mm	180 mm	180 mm	170 mm
Z 8		240 mm	300 mm	300 mm	210 mm
Z 10		–	–	–	245 mm

The table applies for one-part tools.
The number of teeth corresponds to the cutting edges mounted in the tool.

Minimum zero diameter depending on the tool body bore

bore BO	PF 20	PF 25	ProFix S	ProFix F
20	80 mm	116 mm	160 mm	100 mm
25	90 mm	116 mm	160 mm	105 mm
30	95 mm	116 mm	160 mm	110 mm
40	105 mm	116 mm	160 mm	116 mm
50	120 mm	128 mm	160 mm	128 mm
60	130 mm	140 mm	160 mm	140 mm

Note: The larger of the two diameters indicated in the two tables must be used.

ProFix C for counter and slot/tenon profiling

An extension to the ProFix constant tool system specially for window construction for slot : tenon and profile : counter profile joints.

The increasing popularity of profile splitting in modern window construction requires tools with constant diameters and constant profiles. As one tool is not used as frequently as another, the tools need to be refurbished at different times. In conventional window constructions with fixed tool sets, a constant slot width helps to ensure a durable long-term joint. Conventional resharpenable tools have the downside of changing diameters and profile widths. This means the machines need to be reprogrammed.

Throwaway knives are often seen as the way out of this dilemma. The new Leitz ProFix C tool system for making slot-tenon and counter profile joints is more beneficial to the resources and budget. ProFix C is resharpenable without any change in dimensions. It offers the trusted advantages of the ProFix-Plus constant tool and completes the system for all steps to profiling in wooden windows and doors.





ProFix C System benefits

– Constant cutting diameter and constant profile after resharpening
– Large hook and shear angles – ideal for cross grain
– Optimised gullets for large slotting depths
– Knife cutting widths 8 to 20 mm
– Slotting width ≥ 10 mm without spurs
– Other slotting widths possible by exchanging the knives
– Knives can be profiled – profile depth up to 12 mm
– All knife types can be supplied in RipTec design
– HW qualities for all wood types
– HW edge can be resharpened 10 to 12 times
– Used knives can be re-tipped
– Tool body can be supplied in steel or optionally in aluminium
– High rotational speeds for high production

ProFix C Standardisation

– Three basic types of knife seatings cover all application cases
– Modular structure with standardised knife types enables a tool structure matching the profile and direction of wood fibre



With shear angle and lateral clearance angle.



With advanced shear angle outside.



Profile knife with advanced shear angle inside.

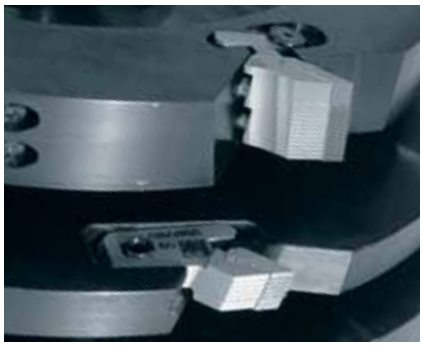

Combination of ProFix and ProFix C knives in the same tool.
Example: Knives with RipTec profile for improved joints.







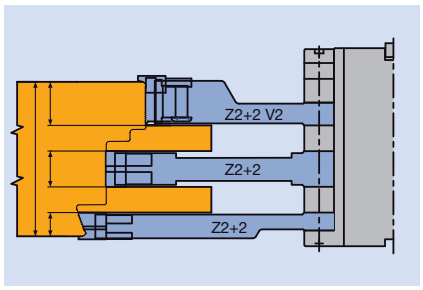

Application example ProFix C „frame tenon for top of jambs“: Cutting edges in RipTec design for improved quality of cut in cross grain.
Combination of ProFix knives for large cutting widths in the rail area.

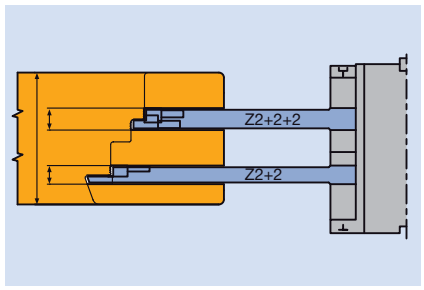

Application example ProFix C „frame slot-cross“: Slot widths from 8 to 20 mm. No spurs are required for slot widths of 10 mm.

For a better performance – the system with an unbeatable variety

When cutting quality matters, the cutter head system ProfilCut Q is setting the standard. It exceeds all expectations, even for the most extraordinary profiling requirements. ProfilCut Q delivers precision results whether in the bespoke or industrial manufacturing of windows, doors or furniture production. With many possible applications and its guarantee of reliability, companies can increase profitability and take the lead in their market sectors.

ProfilCut Q has a diameter range from 0 to 650 mm. The uniform clamping system is designed for exchangeable knives and turnblades. Its light weight is a big advantage of the system.

With a lightweight aluminium supporting body, its effectiveness at high cutting speed is always guaranteed.

The knives are positioned form-fitting in the centrifugal force direction. The tightening of the clamping screws automatically secures an axial and radial centering, resulting in a zero-tolerance fitting. ProfilCut Q is a technical innovation which delivers substantially enhanced surface-quality and reduction of rejects and rework. Matching the profile, the clamping wedges and the guiding elements conduct chip removal, which contributes to a perfect finish.

The special circular tool design with its rounded edges reduces noise. The wear parts of ProfilCut Q are built in steel. The balancing of ProfilCut Q is effectively limiting vibrations, protecting the spindle bearings and leads to a better surface-quality and prolonged performance times.



More profitability

Limited production expenditures due to
– longer tool life by Marathon high power coating
– reduced maintenance
– less machine down time
– economy by combining standard straight and profiled throwaway knives

More quality

Minimum rejects, less rework and machined surfaces to finish quality by
– extra-sharp cutting edges by polished face
– innovative coating-technology for longer performance and cut quality
– balanced to prevent vibration, therefore an enhanced cut quality surface finish

More usability

Short set-up times combined with user friendliness due to
– automatic knife adjustment without setting gauges
– changing the knives while the tool is in the machine is possible
– lightweight construction of the tool body
– clamping screws are dust-protected
– perfect repetition accuracy, after every knife change
– noise reducing design

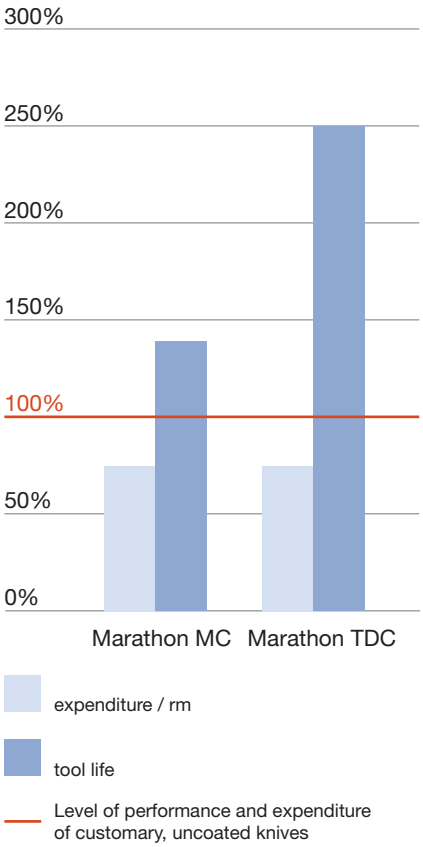



Technical specifications

Radius	Shank tool 0-400 mm Tools with bore 70-650 mm
Cutting width	8-80 mm ProfilCut Q 8-120 mm Turnblade knife
Closed profiles	Z 2, from zero diameter 60 mm max. number of teeth depends on diameter
Tool body	Aluminium / steel
Number of teeth	Single-sided profiles: Z 1, up to zero diameter to 40 mm Z 1/1, from zero diameter to 40 mm
Profile depth	PD max. 20 mm (straight tool body) PD > 20 mm (cranked tool body)

For special surface quality demands, we recommend splitting the cutting edge (2-part design instead of a 1-part design - independent of the cutting width).

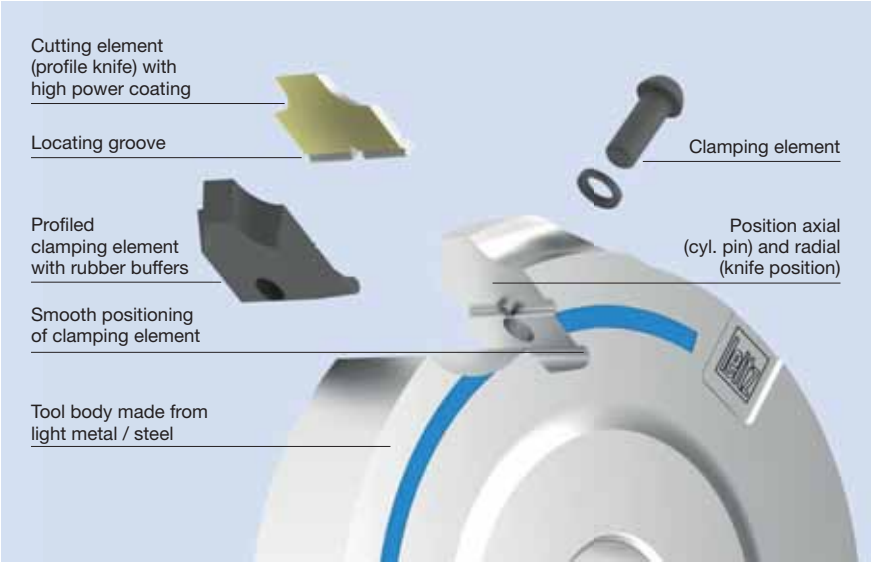

Example for possible turnblade and throwaway knives combination

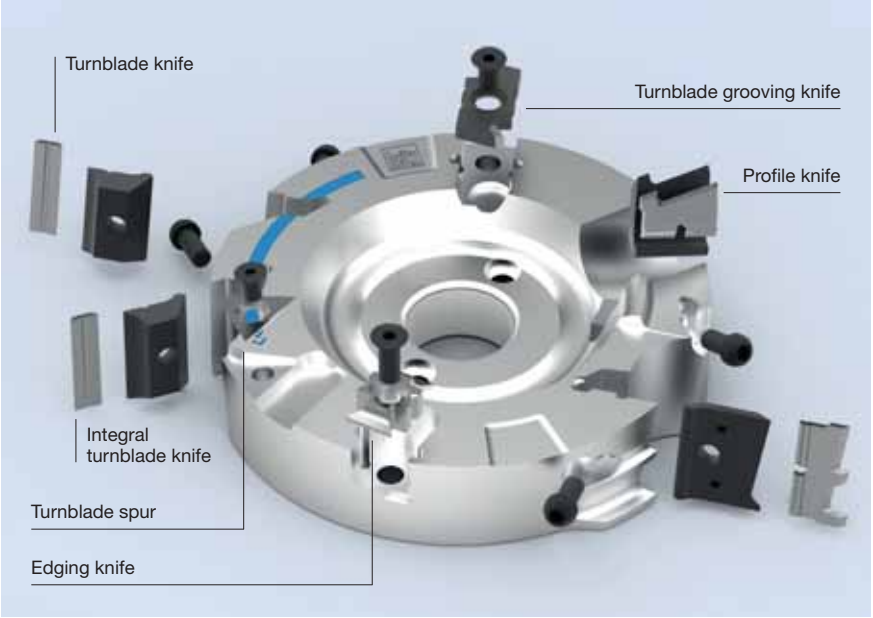

Application overview



Profile

- Window profiles
- Slot and tenon profiles
- Interior and exterior profiles
- Glue joint profiles
- Panel raising profiles
- Post- and Softforming profiles
- etc.

Machining processes

For every profiling tasks in small, medium-sized and large-scale production with a cutting speed (v_c) up to 90 m/s.

Machine types

For all conventional cutting machines with manual feed (MAN) or mechanical feed (MEC).

Materials

- Hardwoods and softwoods
- Wood derived materials such as: plywood, fibreboard, block board and chipboard
- Polymers such as: Duro- and Thermoplastics, laminated wood based panels as well as composite materials and aluminium

Coating

Marathon MC (Multicoating) for demanding profiling tasks. Marathon TDC (Tungsten Diamond Coating) for the processing of hardwoods, abrasive materials and for large scale production.

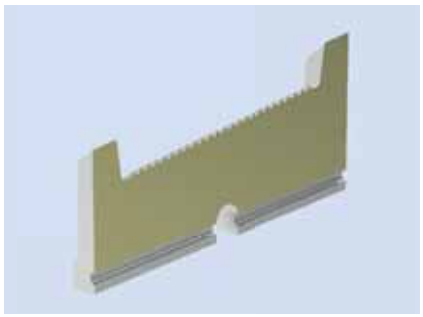

Marathon MC-coating – highest quality for soft woods.

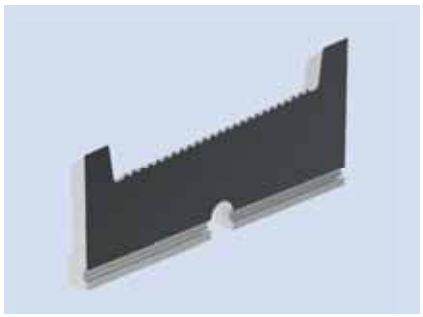

Marathon TDC-coating – specialist for hard woods and abrasive materials.

Extraordinary performance – more quality and quantity with every cut

The new ProfilCut Q Premium cutter head system from Leitz is the ultimate solution for companies who want to make the most from their production. With its unique tool design, ProfilCut Q Premium is the benchmark for performance, flexibility, handling, weight and durability, and manufacturing companies can rely on its extraordinary performance.

With a cutting speed up to 120 meters per second, the premium system is faster than any comparable tool, both in productivity and surface quality. Its accelerated process performance saves time and money.

The integration of Leitz technical innovations create a new standard. The latest clamping system has been designed for the highest radial speed and the unique surface coating reduces abrasion, dirt adhesion and heat build-up even more effectively. The lightweight design of the tool body maintains a greater dynamic. Additionally, changing knives is simple, fast and accurate.

A unified clamping system guarantees safe, form-fitting clamping and minimal set-up time. The knives are positioned in the centrifugal force direction. The special clamping wedges have the additional function as chip-guiding elements. This technical feature enables chip generation with reduced dust which consequently helps lead to a perfect finish. With the special contouring of the tool body, noise pollution is also reduced effectively.

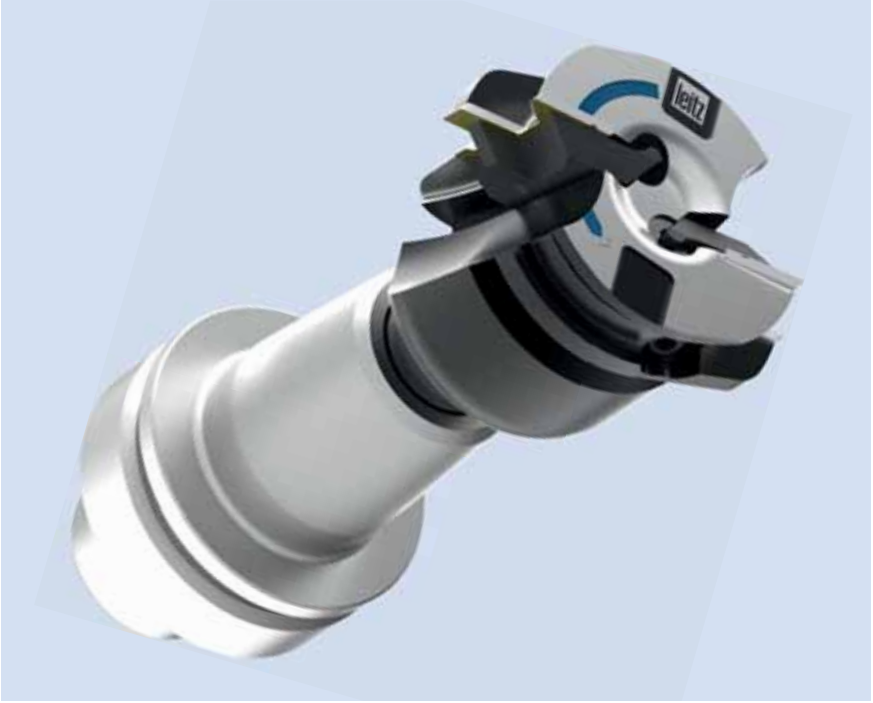

More speed

Maximise productivity by the reduction of processing time and a significantly better surface quality due to
– innovative and secure clamping system
– unique tool body coating reduces heat generation and friction
– lightweight construction of the tool body

More usability

Short set-up times and best usability due to
– automatic knife adjustment without setting gauges
– changing the knives while the tool is in the machine is possible
– clamping screws are dust-protected
– perfect repetition accuracy, after every knife change
– noise reducing design

More endurance

Longer finish cutting quality due to
– knives with Marathon high power coating
– innovative coating technology for longer performance and cut quality
– balanced to prevent vibration, therefore an enhanced cut quality surface finish

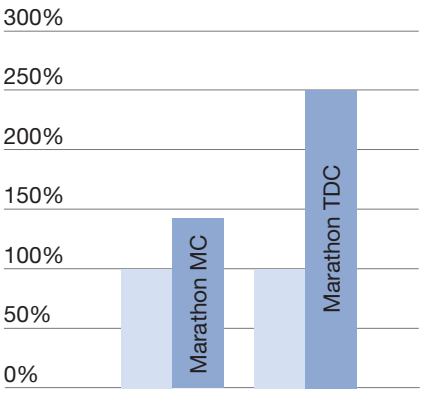



More profit at all levels

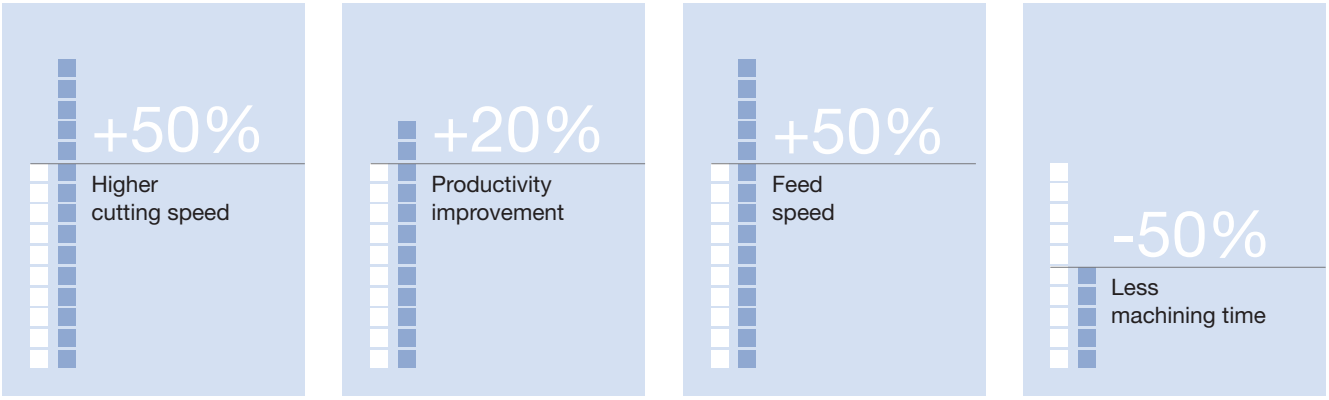

Typical production sample:

- manufacturing output 30 windows per day
- average cutting time 42 % per window
- comparison from an average profile tooling system with Leitz ProfilCut Q Premium

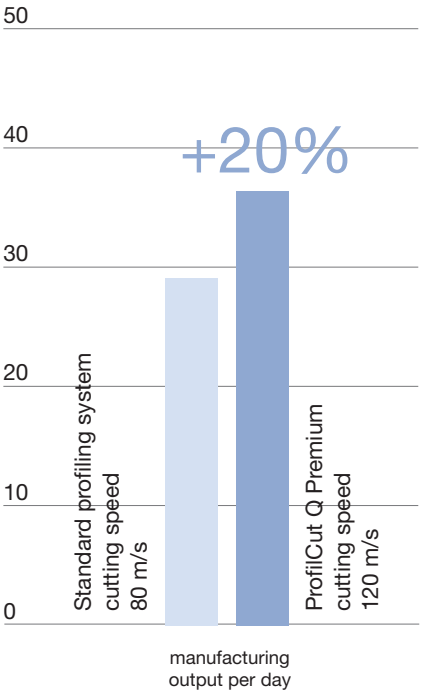



Application overview



Profile

- Window profiles
- Slot and tenon profiles
- Interior and exterior profiles
- Glue joint profiles
- Panel raising profiles
- Post- and Softforming profiles
- etc.

Machining processes

For every profiling tasks in small, medium-sized and large-scale production with extremely high cutting speeds (v_c) up to 120 m/s.

Machine types

For all conventional milling machines with manual feed (MAN) and with mechanical feed (MEC). Particularly suitable for all high-performance machines in stationary technology and for systems with high part ejection or high tool performance.

Materials

- Hardwoods and softwoods
- Wood derived materials such as: plywood, fibreboard, block board and chipboard
- Polymers such as: Duro- and Thermoplastics, laminated wood based panels as well as composite materials and aluminium

Coating

Marathon MC (Multicoating) for demanding profiling tasks. Marathon TDC (Tungsten Diamond Coating) for the processing of hardwoods, abrasive materials and for large scale production.

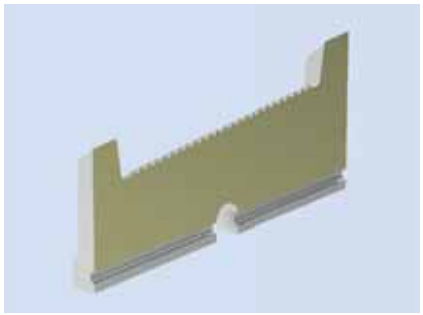

Marathon MC-coating – highest quality for soft woods.

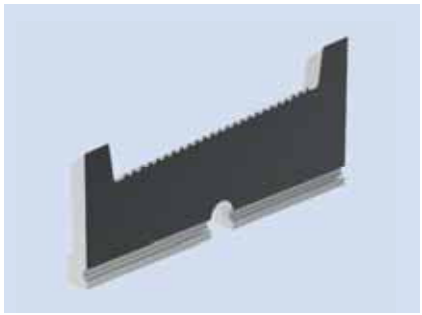

Marathon TDC-coating – specialist for hard woods and abrasive materials.

Technical specifications

Radius	Shank tool 0-400 mm Tools with bore 70-650 mm
Cutting width	8-80 mm ProfilCut Q Premium 8-120 mm Turnblade knife
Closed profiles	Z 2, from zero diameter 60 mm max. number of teeth depends on diameter
Tool body	Aluminium / steel
Number of teeth	Single-sided profiles: Z 1, up to zero diameter to 40 mm Z 1/1, from zero diameter to 40 mm
Profile depth	PD max. 20 mm (straight tool body) PD > 20 mm (cranked tool body)

For special surface quality demands, we recommend splitting the cutting edge (2-part design instead of a 1-part design - independent of the cutting width).

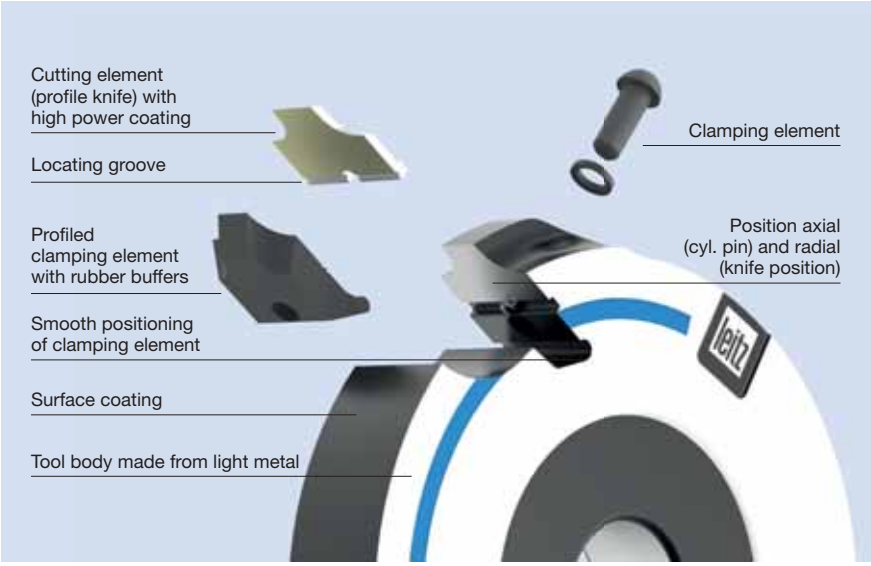

Example for possible turnblade and throwaway knives combination

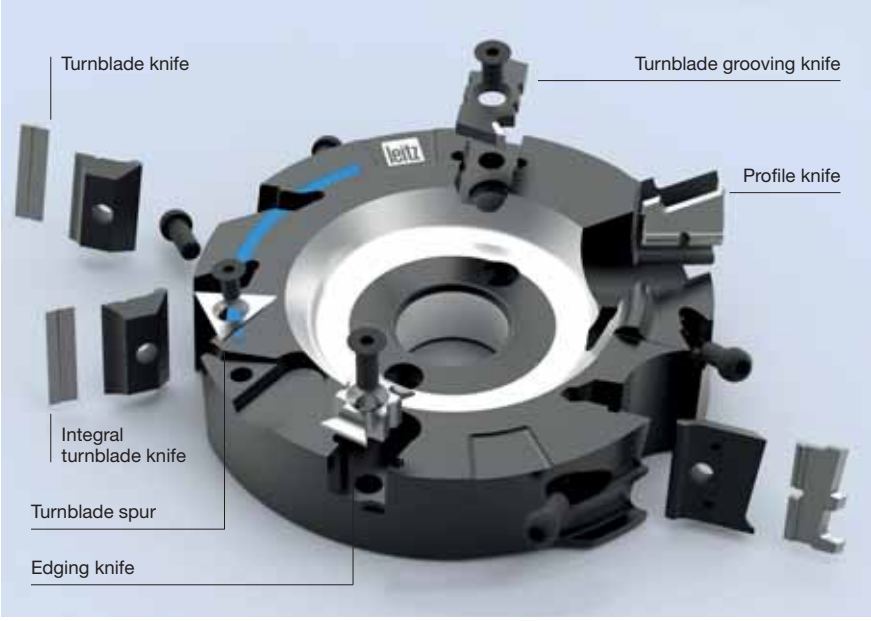

ProfilCut Q Diamond – Diamond in a new dimension

The new replaceable knife system ProfilCut Q Diamond sets pioneering new standards in machine processing. ProfilCut Q Diamond is a unique combination of an ultralight aluminium tool body and re-sharpenable profile knives. This enables constant diameter diamond cutting, guaranteeing higher efficiency and maximum productivity and profitability.

This advanced technical innovation begins with a new diamond cutting edge made from the hardest material on earth: polycrystalline diamond (PKD). Process high-end and abrasive materials precisely with exact repeatability and no loss of performance. After sharpening, the diameter and profile of the cutting edge remains unchanged. ProfilCut Q Diamond can be sharpened five times, and with a service life many times longer than disposable carbide systems, ProfilCut Q Diamond provides significant cost savings.

High performance continues with the dynamics of the tool body's aluminium light-weight construction, and the clamping system has been designed for maximum peripheral speed. The coating effectively reduces impact, friction and heat generation. Even at a maximum rim speed up to 120 meters per second, the system produces first-class surface quality due to reduced vibration. The increased speed also allows faster feed rates with the same number of teeth, enabling higher productivity.

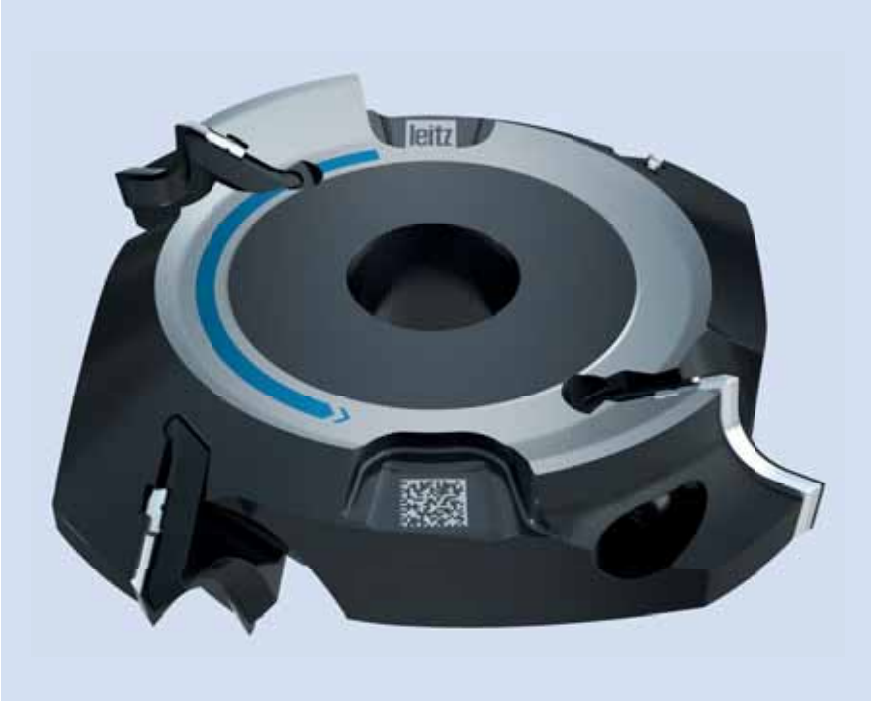

Work faster

Maximise productivity and reduce processing time by:
– significantly improving surface quality
– innovative clamping system for the toughest applications
– friction and heat reducing coating
– lightweight aluminium construction
– less vibration due to superior balance quality
– Diamond cutting

Easy to use

Short set-up times and easy-to-use:
– independent knife positioning without setting aids
– change knives on-site – no need to send the tool to the service centre
– knife change in the mounted set
– perfect repeatability after each knife change
– easy set-up after sharpening
– compatible with all other tooling systems
– noise-reduced design

Sustainable operation

Save on resources, thanks to:
– reusable tool body
– replaceable knives
– resharpen knives five times
– many times longer tool life
– reduced service costs

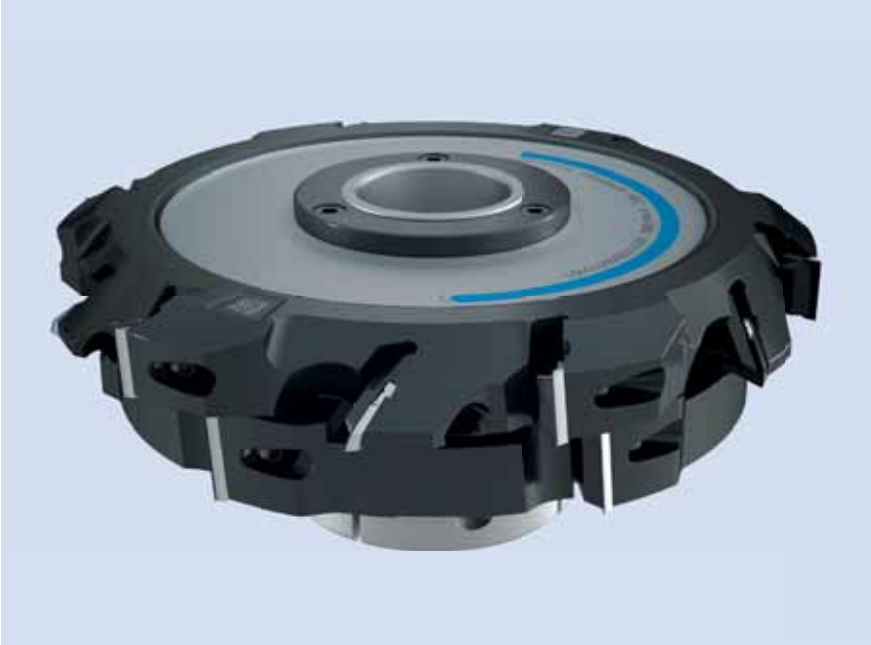

Impressive performance – specialist for hardware

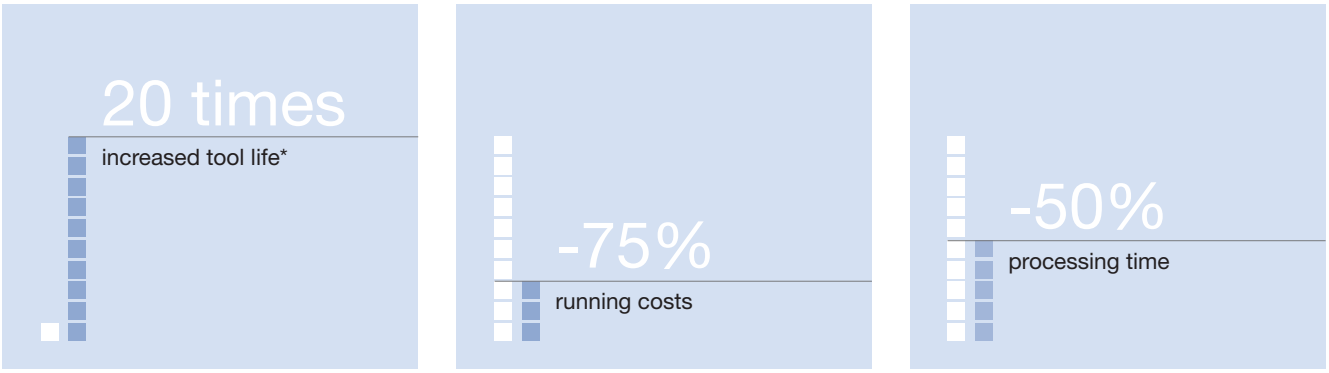

* compared to average carbide tools

Applications	– Versatile applications using advanced materials – Mouldings – Furniture manufacturing – Aluminium processing – Flooring manufacture – Diverse profiles – Window and door manufacturing with abrasive materials
Machining processes	For all profiling applications in small, medium and large production and manufacturing. Suitable for highspeed cutting (HSC) machining with extremely high rim speeds.
Machine types	For all conventional machines with manual feed (MAN) and mechanical feed (MEC). Particularly suitable for all high-performance CNC processing centres and for systems with high output and/or high tool performance.
Materials	– Particularly effective for applications using advanced materials such as aluminium, fibre reinforced or composite materials – All wood materials (softwood, hardwood, plywood, fibreboard, block board and chipboard) – All plastics (duromers, plastomers, laminate board, thermoplastics, laminated wood based panels as well as composites)

Technical specifications

- resharpen knives five times
- constant profile and diameter
- many times longer tool life
- polycrystalline diamond (PKD) – the hardest material on earth

Rim speed	v_c = 120 m/s
Cutting width	Max. 50 mm to profile depth 15 mm
Datamatrix Code	Product information available
Diamond cutting edge	Resharpen knives five times polycrystalline diamond (PCD)
Lightweight	Combined lightweight construction with diamond cutting edges
Number of teeth	Single-sided profiles: Z 1, up to zero diameter to 45 mm Z 1/1, from zero diameter to 45 mm

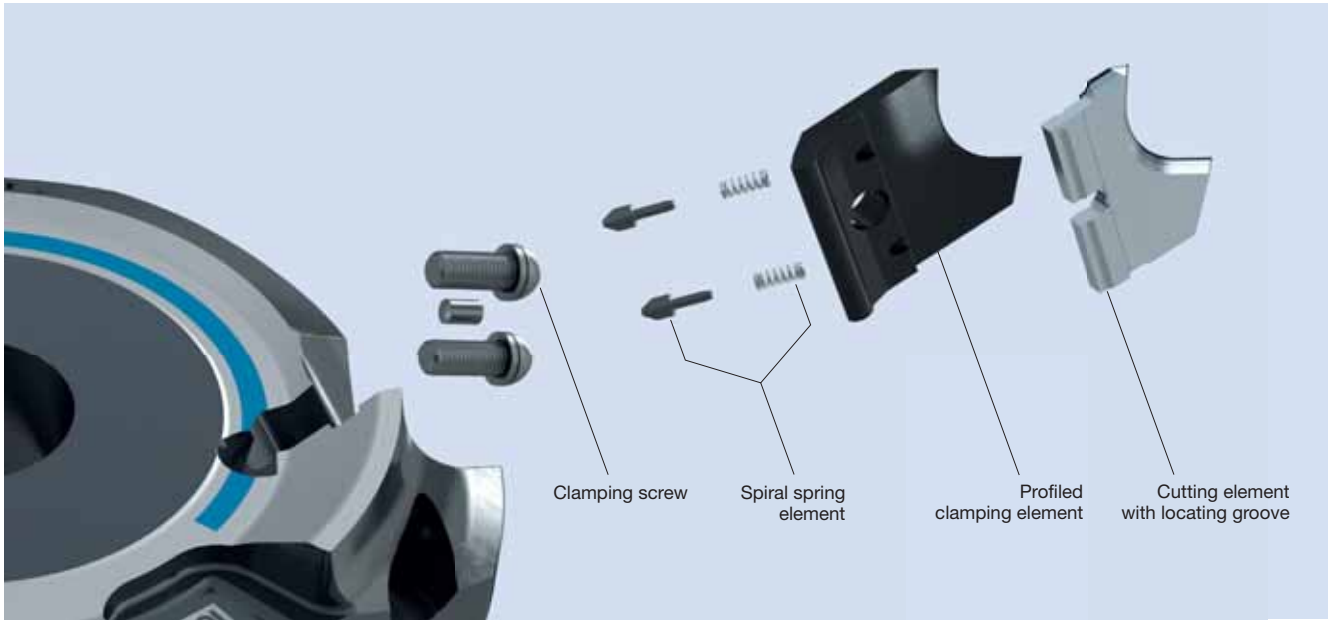

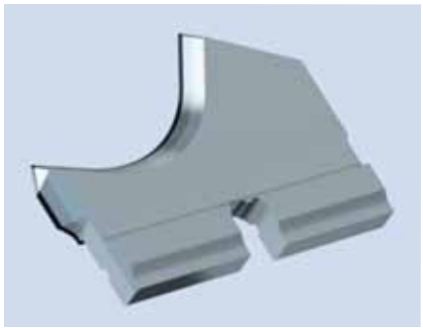

**ProfilCut Plus –
the resharpenable system supplement**

ProfilCut Plus is ideal for producing standard and special profiles, interior and exterior profiles for windows as well as post- and soft-forming profiles. The 0.3 mm sharpening zone allows repeated sharpening. For suitable applications, this considerably increases efficiency compared to a 1-life throwaway knife system.

The elastic deformation of the clamping elements guarantees uniform clamping of the resharpened knife. For safety reasons, resharpenable knives cannot be used in ProfilCut Q or ProfilCut Q Premium cutterheads.

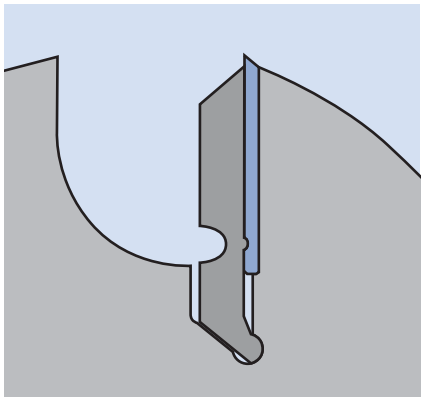

ProfilCut Plus



A system which is both simple and versatile

VariForm – variable and multi-functional

For industrial or manual production: the VariForm tool system offers unique advantages to businesses of all sizes and gives a clear competitive edge to production and quality. Its concept is simple: a flexible tool body design, cost effective as the tools can be resharpened several times, and versatile with numerous knife profiles.

VariForm provides unlimited design opportunities with regard to profile and product form. At the same time it improves the cost effectiveness of your production.

Workpiece materials

Hardwood and softwood, laminated wood, chipboard and fibre material, plastics

Machines

- spindle moulders
- four-sided moulders
- edgebanding and sizing machines
- CNC router cutters and CNC machining centres

Applications

- furniture, mouldings
- prototypes, single pieces
- small and medium series
- etc.





Easy handling

The VariForm knife clamping “overrides centrifugal force”.
3-point support, the knives are centered, clamped and positioned radially by the centrifugal force.
That means no movement at high speeds and precise and safe working at the optimum cutting speed range of 70 to 80 m/s.
Another advantage: As there are no side stops, you can profile the blank knives around the entire periphery.

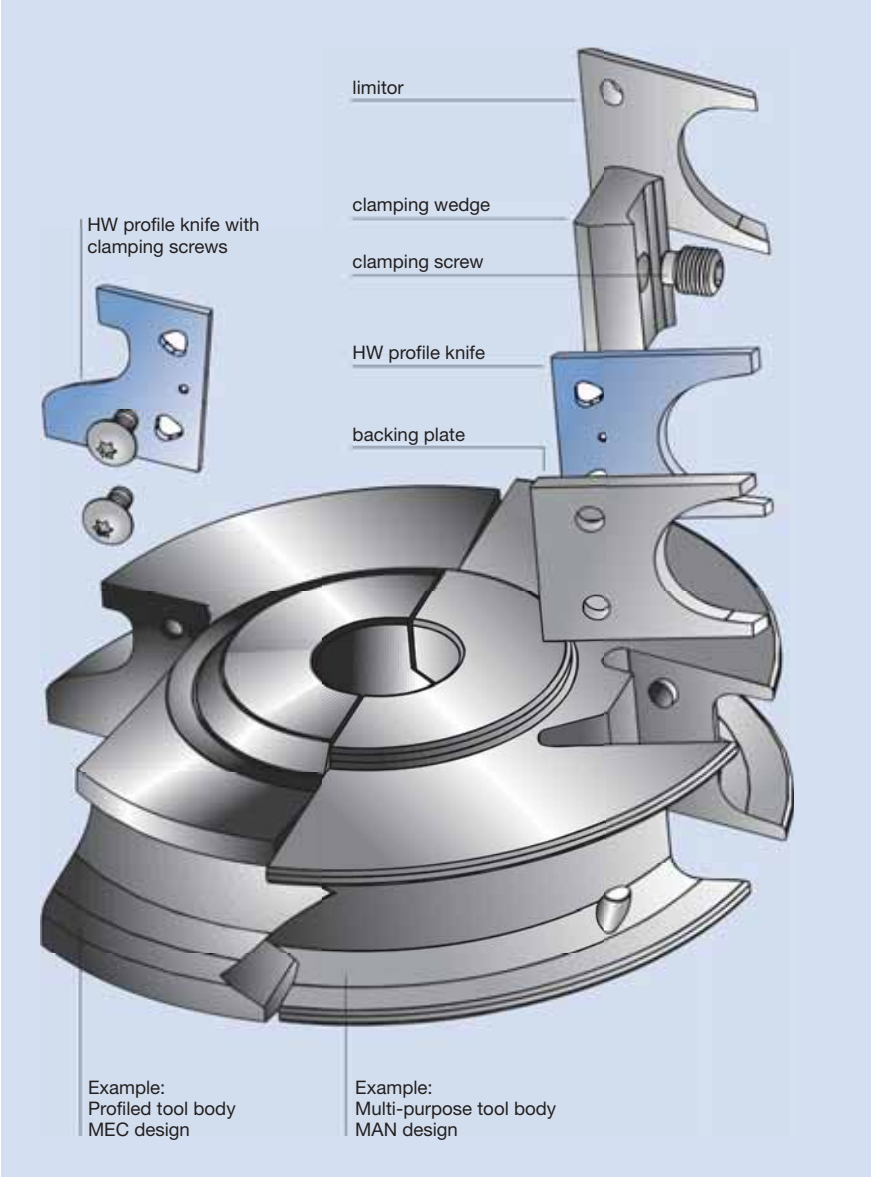

Note:
Small tool diameters or profile depths exceeding 20 mm require profiled tool bodies.

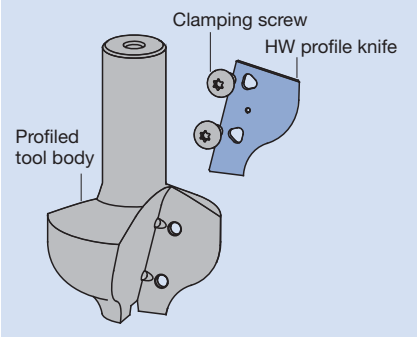

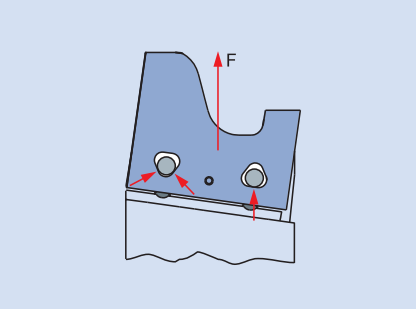

Diagram of the knife clamping.

VariForm – a first-rate tool system – made by Leitz

All advantages at a glance

- Resharpenable three to four times.
- Different HW qualities for solid wood and panel materials.
- The right cutting material for every application.
- Modular system: Use the same profile knife in different tool bodies for different machines, suitable for all popular spindle diameters and for quick-clamping systems.
- Tool body designs adapted to the profile depth for a high degree of design freedom.
- Maximum precision and safety by three-point knife clamping.

And unique customer service as well

Over 120 Leitz service stations respond quickly, expertly and reliably to customer requests. Based on profile drawings or wood samples, special profile knives are produced accurately, quality tested and delivered at short notice to meet the customer deadlines – as standard with Leitz. As we archive the templates, resharpening and replacement are both quick and easy.













VariForm –
main designs and data at a glance

Design variants	Profile depth up to 15/19 mm	Profile depth up to 20 mm	Profile depth up to 35 mm
MAN feed for spindle moulders	 multi-purpose tool body	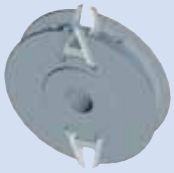 partially profiled tool body, channel	 profiled tool body, cranked ri./le.
Cutting width:	40/45 mm and 50/60 mm	40 mm to 60 mm	40 mm to 60 mm
MEC feed for four-side planing machines, -edgebanding and sizing machines (suitable for quick-clamping systems)		 partially profiled tool body, channel, L profile, I profile	 profiled tool body, cranked ri./le.
Cutting width:		40 mm: L-, I-Profil 40/60 mm: U-Profil	40 mm to 60 mm
MEC feed (CNC) for CNC router cutters and CNC machining centres	 multi-purpose tool body		 profiled tool body, cranked ri./le.
Cutting width:	40/45 mm and 50/60 mm		30 mm to 50 mm





PowerKnife System PKS® Tungsten carbide blank knife with backing plate for serrated back profile cutterheads

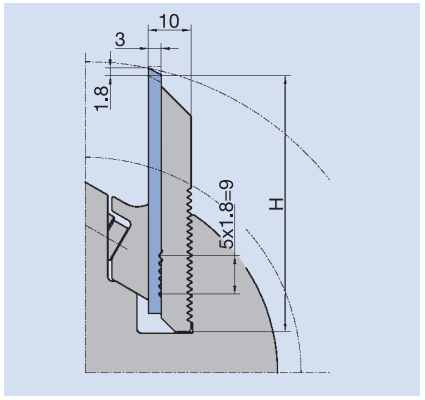

PKS®: New condition

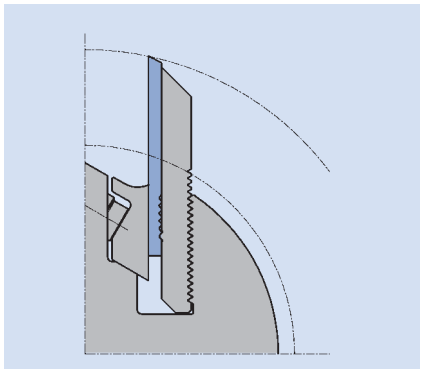

PKS®: Resharpen several times, in end position

Manufacturing profiled mouldings is important. Profiled mouldings are used, for example, at floor level as skirting boards, around doors as frame profiles, and in cabinetry as decorative mouldings. Such products are usually manufactured on four-sided moulders on through-feed machines and pose specific requirements on the tool system.

- Profile changes need to be actioned quickly by suppliers. This means the user must be able to profile and resharpen the tool system.
- The increase in MDF lining profiles requires wear-resistant tungsten carbide.
- For high production volumes, the tool system needs to be either jointable or, in the case of new machine generations, be HSC-suitable, i. e. suited to high rotation speeds up to n = 12000 min^{-1}.
- Furthermore, the number of staff required for tool preparation must not be too high, as the staff is needed to produce the mouldings.

Leitz has developed a user-friendly and highly efficient knife system called PowerKnife System, or simply PKS®, specifically for the high requirements of profile moulding production.

PKS® is a development of the Leitz MicroSystem, which has provided valuable service over the years. It is compatible with all serrated back profile cutterheads with 60° serration, either with bore or HSK. The system consists of a tungsten carbide blank knife and a hardened steel backing plate. Both parts are form-fitting via a serration, but can be separated from each other. The backing plate is secured in the serration of the cutterhead by its serrated back.

This system offers major advantages compared to tipped knives with brazed-on tungsten carbide, and other two-part knife designs:

- For the maximum concentric running, the knives are profiled or resharpened when installed in the cutterhead, machining the tungsten carbide edges and the steel backing plate separately with the appropriate grinding wheel. The backing plate is profiled only once, while the tungsten carbide edge is resharpened several times and can be replaced separately. Thanks to the single-material machining of tungsten carbide or steel, grinding wheel consumption, processing time and tool cost are reduced.
- The resharpening depth of the tungsten carbide knife is 10.8 mm, approx. 40 single average performance times.
- The adjustment area of the knife system is defined by the design. It is not possible to project the knife too far out of the tool. This ensures safe operation of the system at all settings.
- The form-fitting connection between the tungsten carbide knife and the backing plate by just one serration ensures the parts are in contact over the whole surface, enabling maximum positioning accuracy, as one serration by definition does not lead to pitch errors.
- The comparatively large increments of 1.8 mm when adjusting the tungsten carbide knife enable six to eight resharpening processes in one installed position. In relation to the overall single performance time of one knife, this reduces knife mounting and setting time.
- The two-part design allows use of more wear-resistant tungsten carbide grades compared to brazed tungsten carbide knives and significantly increased performance times.
- Only ultra-fine tungsten carbide grain grades are used. And the cutting face has a mirror finish. Combined, these give extremely sharp cutting edges and a perfect surface finish.



The PowerKnife System PKS® is available as
– non-profiled blank knives with the heights 50, 60 and 70 mm for profiles to a profile depth of 33 mm
– knives with a height of 40 mm for planing or jointing. This knife height matches the tool diameters for jointing in the moulder.

Only ultra-fine grain tungsten carbide qualities are used as:
– HW-30F for solid wood, preferable hardwood
– HW-10F for wood materials such as MDF, WPC.



Tool example for PKS®:
Multi-profiling of MDF mouldings

The knives can be jointed in the moulder. When used with HSK tools, experience has shown that the ground accuracy is sufficient to allow a Z2 tool at 12000 min^{-1}, e. g. in MDF to run at a feed speed of 50 m/min, and give a finish quality even without jointing. Productivity can be increased still further through parallel profiling of several mouldings and subsequent splitting. PKS® with cutting widths of up to 310 mm are available.

Even if profiled by the user, it is sometimes necessary to use the competence, expertise and equipment of a specialist to prepare the tools. Leitz, with its service centres around the world, offers this service. The tools are mounted, ground and measured. The profile specific measuring points are defined as specified by the user and the measured data documented on the accompanying tool card. The tools are returned in a reusable transport container. Your production staff can concentrate more effectively and efficiently on their actual task – producing mouldings. This service package is extended still further by integrating the user's CAD profile data in the service centre grinding programs, as well as providing a telephone hotline for urgent cases.

www.leitz.org

SDZ/MA 10/2017 Subject to changes prior to technical developments. © Leitz GmbH & Co. KG

User encyclopedia

Leitz Lexicon Edition 7



11. User encyclopedia

11.1 Materials science	11.1.1	Wood as a raw material and basic material	2
	11.1.2	Wood materials	6
	11.1.3	Plastics	9
	11.1.4	Mineral materials	11
	11.1.5	Non-ferrous metals	12
	11.1.6	Composite materials	13
11.2 Cutting materials			14
11.3 Fundamental cutting principles	11.3.1	Essential geometry elements in a cutting tool	19
	11.3.2	Cutting directions and procedures when cutting wood	20
	11.3.3	Cutting kinematics	21
	11.3.4	Processing quality	22
	11.3.5	Tool parameters	25
11.4 Machine tools	11.4.1	Tool types	28
	11.4.2	Types of tools	31
	11.4.3	Tool clamping systems	40
	11.4.4	Tool maintenance	43
	11.4.5	Safety	51
	11.4.6	Low noise tools	53
	11.4.7	Chip and dust extraction	54
	11.4.8	Tools as intelligent process components	56
11.5 Wood processing machines	11.5.1	Through feed machines	58
	11.5.2	Stand alone machines	59
	11.5.3	Machines for manual feed	61
	11.5.4	Hand operated electrical tools	62



Tree

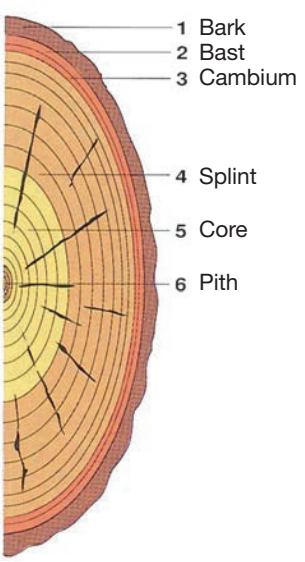

Structure of a trunk

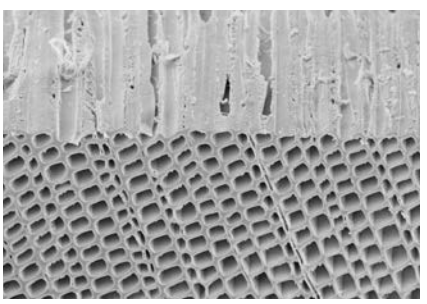

Cross section of softwood (spruce)

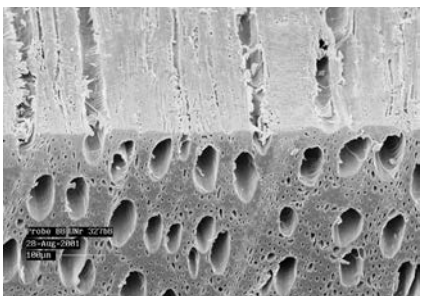

Cross section of hardwood (beech)

As a renewable material, wood is a raw material which is important because of its strength and low density and because it is found all over the world. As a result, wood is used widely in support structures in timber construction and in non load-bearing areas such as building components, furniture or interior fittings. In its dry state, wood possesses low thermal conductivity properties due to its porous cell structure which means it has a certain level of heat insulation. Wood is therefore a good raw material from an energy point of view and is, for this reason, used in window frame elements or insulation panels. Wood is also used in its natural form (solid wood) or converted into wood materials.

There are several specific properties which must be considered in the selection, application and processing of solid wood. The **most important properties** are: **inhomogeneity, anisotropicity, porosity, hygroscopicity and biodegradability**. The structure of wood consists of fibres stronger in a longitudinal than in a lateral direction. The fibres consist of cell walls which form the actual wood substance and of vessels (also known as „pores“). The relationship between the volume of the pores and the mass of the wood substance determines the bulk density and varies from one wood type to the next. Depending on the time of year, the pores become larger (spring, summer → **earlywood,** lower density) or smaller (autumn, winter → **latewood**, higher density). This phenomenon can be seen by taking a cross section of the wood and observing the growth rings from successive earlywood and latewood periods. With slow growing wood in cold regions, these growth rings are tight together, whereas with quick growing wood from warmer regions, the growth rings are spread out. In contrast, these differences are barely noticeable in tropical woods.

Wood develops by a process of cell growth and cell multiplication within the growth ring, or cambium. Most cells develop inwards to form the wood structure, while some grow outward, forming the bark and phloem, or inner bark. Every tree is built in layers; a cross-section through the trunk is as follows from outside to inside: bark, phloem, cambium, sapwood (medullary rays, annual rings, spring growth and summer growth, resin ducts), heartwood (without sap capillaries: this is purely structural in function) and pith.

There are two main wood types: **hardwoods and coniferous woods**. Coniferous woods are older in evolutionary terms and therefore have less complex cell structures involving two cell types. The tracheids (elongated, tapered) are strong and act as conductors. Water is exchanged between the cells through so called pits or bordered pits. The parenchyma cells (rectangular) are responsible for transporting the nutrients and storaging starch and fats.

In contrast, functions are divided between the cells in hardwoods. The cells are divided into vascular tissue, ground tissue and seed tissue. The main feature which differentiates hardwoods from coniferous woods is the vessel elements (tracheids) in the vascular tissue. These can be seen as pores in a cross sectional view, and as striations in a longitudinal view. The arrangement of these wood vessels determines whether the wood is ring porous (e.g. oak, ash), semi ring porous (e.g. cherry, walnut) or diffuse porous (e.g. birch, beech, poplar).

While there is a general similarity between softwood and conifer, hardwood and broadleaf, there are exceptions such as yew – which is a hardwood – and alder, birch, lime, poplar and willow – which are softwoods.
For processing and tool selection, factors such as density, strength, elasticity and hardness are important considerations. Accordingly, the categorisation of **hardwood and softwood** is important insofar as it provides a broad guide to these properties.



Sapwood (bright) and heartwood (dark) (example pine)

Merely the „appearance“ of the timber, lumber or planed timber can give information on the properties and on the potential level of difficulty during the woodworking process. **Sapwood and heartwood** from a tree have different properties, for example. The sap flows in the outer layers of the trunk. This leads to an outer area of sapwood with a higher level of moisture and inner areas of less moist heartwood. Sapwood and heartwood are always of varying quality. With increasing trunk diameter, the relative size of the heartwood becomes greater as the sapwood or ripewood progressively converts to heartwood. Once converted to heartwood, the material ceases further structural change. Both sapwood and heartwood are present in all types of tree, although they are more easily distinguished in the so called „heartwood trees” – such as oak, larch, pine, cherry and ash – than in „sapwood trees” – such as beech, fir and spruce; these may very little in colour.



Earlywood (bright) and latewood (dark) (example Pinus Radiata)

During wood processing and woodworking procedures it must be remembered that wood is a material with varying structures and properties. The growth rings are particularly indicative of this fact in coniferous woods. The are significant differences in hardness between the marked areas of **earlywood and latewood**. During woodworking process, these circumstances must be taken into consideration and cutting materials, cutting material geometries and process parameters must be adapted correspondingly. When processing various types of wood often a compromise for various types of wood is required.
Bulk density is the decisive factor for most technical properties. Bulk density is the ratio of the mass and volume (including all vessels). Depending on the type of wood, bulk density is usually between 100 kg/m^3 and 1200 kg/m^3. Higher bulk density means that the wood is harder, firmer, tougher to process and treat and also harder to dry. Tool wear also increases in direct proportion to the bulk density of the wood. Other factors which influence cutting edge wear are wood components such as tannic acid or silicate inclusions. Natural tannic acids, such as those present in oak, lead to the chemical wear of tool cutting edges, particularly if the wood has a higher moisture content. Silicate inclusions, such as those present in tropical woods of Meranti, Teak or Mahogany, are absorbed from the ground along with nutrients and then crystallise in the vessels. They cause increased abrasive wear to the cutting edges. Large density differences between earlywood and latewood normally are a sign of strong presplitting and a tendency to splinter during processing (example: Pinus Radiata). The increasing global wood demand is the reason why trees are more and more bred in forest plantations. Those so called plantation woods are generally fast-growing species such as Radiata Pine, Eucalypts, and Poplars. These plants show rougher annual growth rings, lower density and strength in comparison with the plants grown in natural forests. Due to the stronger predisposition of trunk splitting and defibering sometimes the cutting of plantation woods presents a real challenge. It requires both special machining technology and special tool solutions. Long-fiber woods as Poplar are used as raw material for wood-based materials.

Type of wood	Bulk density [kg/m³]	Strength [N/mm²]		
		Compressive	Bending	Shearing
Hardwoods				
Afzelia	750 - 950	65 - 79	90 - 120	7.5 - 15.0
Maple	530 - 790	29 - 72	50 - 72	9.0 - 15.0
Balsa	90 - 260	5 - 15	12 - 23	1.1 - 2.0
Bangkirai	900 - 1100	68 - 80	125 - 140	10.0 - 15.0
Birch	510 - 830	38 - 100	147 - 155	12.0 - 14.5
Beech (Red Beech)	540 - 910	41 - 99	74 - 210	6.5 - 19.0
American Oak	550 - 980	39 - 61	89 - 130	9.0 - 14,6
European Oak	430 - 960	54 - 67	74 - 105	12.0
Alder	490 - 640	31 - 77	44 - 172	3.0 - 6.5
Ash	450 - 860	23 - 80	58 - 210	9.0 - 14.6
Eucalyptus	720 - 790	37 - 51	75 - 104	9.5
Iroko	550 - 850	52 - 81	70 - 158	9.5 - 12.5
American Cherry	525 - 615	33 - 59	59 - 98	15.0
Mahogany	450 - 620	36 - 70	50 - 130	6.0 - 9.5
Meranti, Dark Red	550 - 890	53 - 74	66 - 222	7.1 - 10.6
Meranti, Light Red	390 - 760	21 - 50	32 - 80	4.0 - 8.0
Merbau	760 - 830	60 - 85	140	13 - 17.5
Populus	410 - 560	26 - 56	43 - 94	4.0 - 8.0
Sipo	550 - 750	43 - 73	47 - 155	5.5 - 15
Teak	520 - 700	42 - 59	58 - 109	8.3 - 9.5
Coniferous woods				
Douglas-fir	640 - 800	43 - 68	68 - 89	7.8 - 10.2
Spruce	330 - 680	33 - 79	49 - 172	3.0 - 6.5
Pine	330 - 890	35 - 94	59 - 98	6.1 - 14.6
Larch	440 - 850	64 - 132	107	4.5 - 10.9
Radiata pine	450 - 580	36 - 65	60 - 91	6.8 - 7.6
Fir	350 - 750	31 - 59	47 - 118	3.7 - 6.3

Table: Bulk densities and strength values (moisture content: 12%) for established wood types (source: Holzatlas, Wagenführ, 2007)

The Brunell **hardness** of woods is tested at 12% moisture content. The hardness parallel to the fibres will be approximately double that perpendicular to the fibres. Because of the differing cell forms and varying structures within the wood, hardness figures can only be quoted as guidelines. They are, as for density values, highly dependent upon the moisture content of the wood.

Other physical properties which are of importance when working with wood are its **elasticity and strength**. Elasticity is a measure of the ability of a solid material to return to its original configuration from a distorted state (unit: E-modulus, N/mm²). When judging the strength of timber, it should be remembered that knots, splits, spiral grain and other structural idiosyncrasies have a significant effect on this property.

Moisture content plays an essential role in terms of how the wood is processed and the quality of the end product. Moisture content is the percentage of water in relation to the dry mass of the wood. In freshly harvested wood, water is both bound in the cell walls as well as contained in the vessels. Moisture content can be over 100% in this case. If the water has escaped from the cell vessels and is only present in the cell walls, then the term „fibre saturation point“ is used. This varies from wood type to wood type and is usually at around 30% moisture content. Below this saturation point, the wood shrinks and swells when moisture is released or added. With kiln dried wood, moisture content is 0. In order to achieve sufficient dimensional stability, the wood should therefore be dried before the finishing process so that the moisture content corresponds with the moisture content of the environment in which it will be used. This is known as the equilibrium moisture content. Indoors, this value is somewhere in the range of 6% to 12%, and is somewhere between 8% and 16% outdoors (without direct exposure to the elements). Moisture content needs to be between 12% and 14% for the best possible woodworking conditions. Below this value, the wood has a greater tendency to split, and above this the surface roughness is increased through shrinkage during final drying.

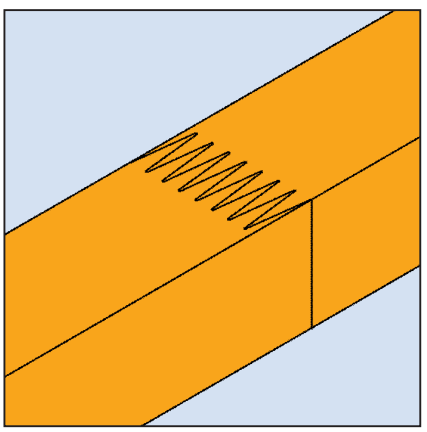

Structural solid wood (KVH)

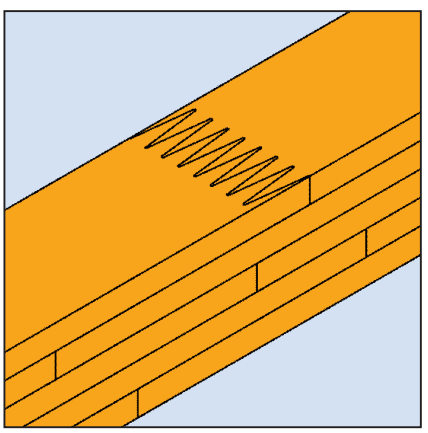

Laminated timber (BSH)

Due to its limited dimensions, its swelling/shrinkage and its inhomogeneity from knots and branches, solid wood is usually further refined into **semi finished products**. With structural woods, weak points such as branches or cracks are cut out. Through finger jointing on the end grain edges, components can be manufactured to be any required length. By laminating planks or boards parallel to the wood fibres, larger component cross sections can be created and strength increased. Products in this area include solid structural timber and glue laminated timber. For window frames, for example, the laminated strips can be manufactured using a wide range of wood types with a variety of properties.

Modified woods

A large number of modification techniques have been developed and tested over the past few years in an attempt to identify suitable methods for making woods which are available in sufficient quantities dimensionally stable and weatherproof for use outdoors. Pinus Radiata, for example, is stabilised through an acetylation process (Accoya®). Pine is treated with a pressure impregnation process (Belmadur®). Dimensional stability and weatherproofing of thermotreated wood is generated through a pyrolysis process.



Modified wood (examples)
Accoya®, thermal beech, Belmadur®

One common factor in all of these techniques is that they do not just have an effect on areas near the surface of the wood, but on the material as a whole. These techniques have created „new types of wood“ with minimal swell/shrink behaviour, increased hardness and modified woodworking properties. Cutting forces and wear are lower than with natural woods. Brittleness and dust formation during processing are higher, but these factors do not cause any fundamental limitations.

All materials which are manufactured from wooden structural elements, such as panels, veneer, chips or fibers, are known as wood derived materials in both lay and specialist terminology. Wood derived materials started being developed in the 1920s. Then, large, flat pieces of wood with different thicknesses were bonded and pressed together with the fibres running in different directions. Plywood panels and multiple layer panels opened the way for new designs and construction opportunities.



Cross laminated timber CLT

After 1950, an independent woodchip material industry developed on a global scale from the beginnings of chipboard manufacture in the 1930s. This industry concentrated on panels or moulded parts made from the chips or fibres of hardwoods and coniferous woods, and also of lignified annual plants (such as straw or flax). In the DIN 4076 standard, wood based panels are classified by type, structure and bulk density. The manufacture of wood based panels allowed the development of furniture manufacture on an industrial scale.

Today, wood materials are roughly divided into:

- **Solid wood and veneer materials:**
  such as laminated timber, plywood, veneer plywood or multiplex boards
- **Woodchip materials:**
  such as flat-pressed panels (chipboard), particle boards, oriented strand boards (OSB)
- **Wood fibre materials:**
  Medium-density fibreboard (MDF), high-density fibreboard (HDF), hard fibreboard or wood fibre insulation boards
- **Wood composites:**
  such as wood plastic composites (WPCs); light weight building slabs – high-strength surface layers with a soft core of foam, balsa wood or honeycombs of cardboard or plastic; synthetic resin compressed wood (armourply) – compressed materials made from beechwood veneer and synthetic resin (bulk density: 900 – 1400 kg/m^3)



Block board

The objective with all these wood materials is to generate a material which is isotropic in at least two dimensions, despite the anisotropic properties of wood. A layer structure which is symmetrical with the midplane of the board is an important pre-requirement to guarantee warp free boards.

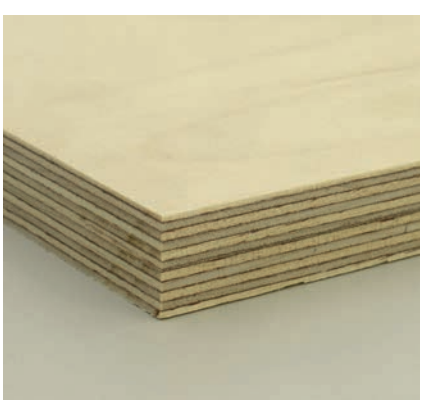

Multiplex plywood

With **solid wood and veneer materials**, quasi-isotropic properties are obtained through the individual layers being bonded together parallel to their fibres. During the woodworking process with such materials, the tools must be configured for simultaneous processing both parallel and perpendicular to the fibre direction. The glued joints usually generate the highest tool cutting edge wear.

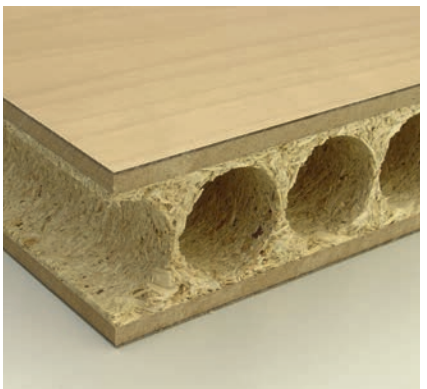

Extruded chipboard as heart of a composite material



Chipboard, plastic coated

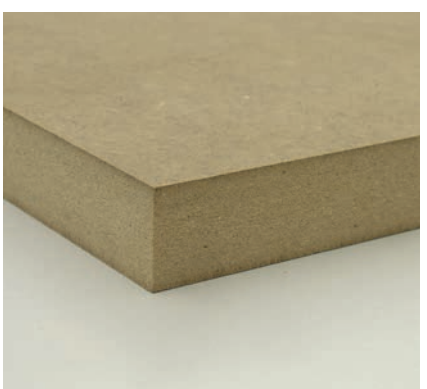

MDF board

Chipboards are divided into two different categories, flat pressed panels or particle boards, depending on the pressing method used. With flat pressed panels, the woodchips are primarily oriented in the direction of the panel. A variety of layers with a variety of properties can be manufactured by changing the size of the woodchips. Usually, panels are manufactured as three layer panels. The middle layer has large woodchips whereas the two outer layers have finer woodchips giving a smooth surface. In contrast, woodchips in particle boards lie predominantly perpendicular to the direction of the panel. They have the same structure through the entire cross section.

Chipboards are classified by strength and moisture resistance to DIN EN 312-1.

General use (non load-bearing function)	General use, also for load-bearing components	Heavy duty for load-bearing components
P1 for light panelling in dry areas	P4 dry areas	P6 dry areas
P2 for furniture and interior fittings in dry areas		
P3 in moist areas	P5 moist areas	P7 moist areas

Fungicides and flame retardants can also be added to the boards during the manufacturing process.

The most important features of chipboards are, however, their bulk density and their strength. Heavy chipboards (such as flat pressed panels), widely used in furniture and interior fittings, have a bulk density of between 450 and 750 kg/m^3. During storage of the wood, non wood materials such as sand and small stones enter the manufacturing process, meaning that chipboards have a certain level of sand content. Sand content and particle size play a vital role in tool wear, which is why diamond tools are predominantly used in industrial processing. The shortage of raw materials has resulted in waste wood increasingly being processed into chipboard which means that the proportion of impurities in the wood is increasing.

The large number of particle boards' variations depending on their composition and the related properties as lacking distortion and decorative coatings explains the frequent and versatile use in furniture manufacturing and interior fittings.

Alongside woodchip materials, **wood fibre materials** are also classified according to their composition and method of manufacture. Porous fibreboards with a bulk density above 230 kg/m^3 as well as medium hard, hard and extra hard fibreboards with a bulk density up to 800 kg/m^3 are manufactured from wood or other lignocellulose fibrous raw materials.

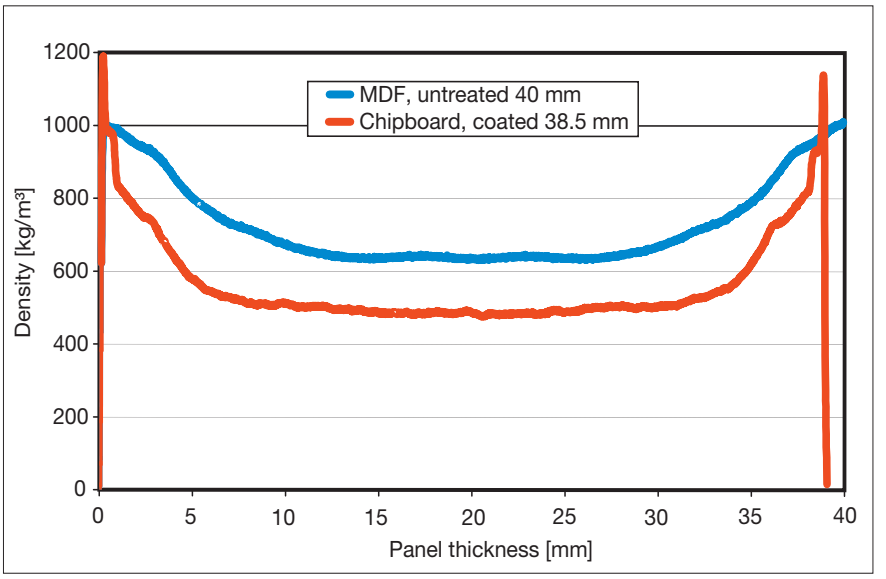

Density profiles of chipboard and MDF

„Medium-density fibreboard“ (MDF) became more and more important in furniture and interior fittings constructions in the 1980s as a further development of woodchip and wood fibre materials. Just like solid wood, the surfaces and edges of MDF panels can be profiled and finished as a result of their homogenous structure. They are predominantly manufactured from bark free coniferous wood which undergoes several phases of preparation to turn it into dry ultra fine fibres. This substance is then pressed together with glues which are low in harmful substances to create a panel with a roughly constant density. Bulk density is usually somewhere between 600 kg/m^3 and 1000 kg/m^3. According DIN EN 316 there are three different types: HDF (≥ 800 kg/m^3), light MDF (≤ 650 kg/m^3) and ultra-light MDF (≤ 550 kg/m^3).

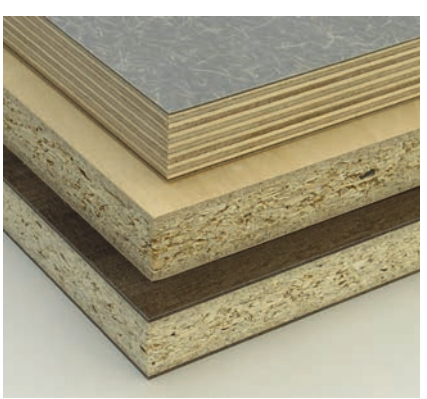

Coated panel material

When processing with machine tools, the **type of coating** must also be kept in mind alongside the physical and chemical properties of the materials. All types of wood materials are usually delivered as a finished product with some kind of coating. Surface finishes range from veneer and paint to paper and plastic of various thickness and hardness. Typical examples of the latter category are melamine resin or HPL (high-pressure laminate) coatings. The hardness and structure of the coatings mean that cutting geometries need to be adapted to ensure tear free processing. Overlays of laminate panels, which contain corundum particles to increase abrasion resistance, generate the highest levels of cutting edge wear.

Wood materials, with their wide range of specifications, have, like no other material, changed the way products are designed and the way materials are processed. Every new type of material brings with it new demands in terms of machinery and tools. Tear free cutting edges and precise profiling must be achieved with efficient manufacturing methods. Every further development with wood materials therefore leads to new and specially adapted tool designs and, if necessary, new processing methods.



Thermoplastic plastics
(solid material)



Extruded plastic profiles



Polymer clumping in the case of
thermoplastics (schematic diagram)



Gloss cut section on PMMA workpiece

Plastics consist of interwoven molecule chains, polymers, which in turn are composed of repeating structural units called monomers. The type of polymer bond determines the plastics properties. There are three main groups: thermoplastics, thermosets and elastomers.

Two common factors for all plastics are a low density and low thermal conductivity. The different properties of different types of plastics must be taken into account in machining work. High quality, efficiency and production security can only be achieved with tools and machining parameters specially customised to the material.

Thermoplastics

In thermoplastics, the molecule chains are crosslinked. A typical characteristic of thermoplastics is that they have a temperature at which they soften. Once a thermoplastic is heated above this temperature, it is soft and can be formed and shaped. Below this temperature (specific to a particular thermoplastic) thermoplastics retain their original shape. Thermoplastics can be used in a number of processes – injection moulding, extrusion and press forming.

Thermoplastic plastics also can be strengthened by fibres in order to increase density. Normally this involves short fibres so that the extrudability is continued. This technology for example is used for window profiles so that a reinforcement with steel inserts can be renounced.

The temperature at which thermoplastic starts to soften is around 60°C (depending on the specific plastic), a temperature relevant to the machining process. Exceeding the softening temperature during machining is detrimental to the machined quality. The chips melt, the tools become sticky, and both quality and production are no longer consistent. As well as specific tooth geometries and tool chip gullets, selecting the machining parameters is of upmost importance. Permitted cutting speeds are usually lower than those permitted with woodworking.

Transparent thermoplastics such as PC and PMMA require special processes. A transparent cutting surface is often required. This means having a totally smooth cutting edge with no visible cutter marks, a special cutting geometry and, of course, stable machinery with good clamping. A high quality cut can be achieved with polished tungsten carbide cutting tools. Monocrystalline diamond is the preferred choice for completely glossy surfaces. If these measures are not taken, the result is a matt cutting surface.



Structure of thermosets
(schematic diagram)



Compact laminate panel



Structure of elastomers
(schematic diagram)

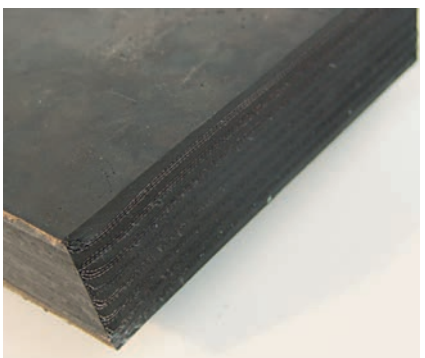

Elastomer with fabric insert

Thermosets
In thermosets, the molecule chains are irreversibly cured at cross linking sites, or nodes, through chemical bonds.
When a thermoset is heated up, the monomers begin to move. The intensity of these oscillations increases as the temperature rises. When the temperature rises above a critical point, the nodes are irreversibly broken. As a consequence, thermosets are destroyed at a temperature specific to the material – the pyrolysis temperature – which is above 150°C. Thermoset materials are usually moulded or, in the case of composites, pressed. They are usually hard and brittle.

To improve the properties of thermosets, **reinforcement materials** in the form of laminated paper, fibreglass, carbon fibre or aramid fibre are incorporated into the thermoset mass. The different combinations of these materials have been given new grade designations such as FR-2, FR-3, FR-4, CEM-1, CEM-3 etc. (for example, FR-4 is glass reinforced epoxy laminate).

Typical examples for duroplastic working materials are for example compact laminate panels or high pressure laminates (HPL laminates) of melamine - or phenolic papers, printed circuit boards (PCB) or PU-foam.

The focus is not on the temperature during the machining process. The cutting speeds are higher than those for thermoplastics. Due to the hard brittle material properties and the abrasive effect of the embedded fibres, tools used in conjunction with thermosets require different geometries and cutting materials than those used to process thermoplastics.

Elastomers
Elastomers are soft plastics, more commonly known as „rubber“, which can be shaped and then go back their original form when released. This particular property is due to the wide meshed structure of the molecule chains. They do not soften when heated. Machining is possible, but rare. The main difficulty is clamping the workpieces.

Mineral constituents are attached to board materials using a bonding agent. The materials have specific properties depending on the proportion and type of bonding agent and mineral constituents. Compared to wood materials, the cutting speed for mineral materials must be decreased.



Mineral working material

Polymer bonded mineral materials
(e.g. Corian, Hi-Macs, Kerrock, Noblan, Surell, Varicor, Velstone)
Two thirds of these materials consist of natural minerals (e.g. aluminium hydroxide, feldspar) which are bonded in an acrylic polymer (PC) matrix. The material can be shaped at high temperature due to its high proportion of acrylic. The proportion of mineral materials raises the softening temperature of the plastic, which makes machining easier. These materials are mainly machined using tungsten carbide or polycrystalline diamond cutting tools. Very large mineral particles can damage diamond cutting edges so, as a result, tungsten carbide cutting edges are recommended in this case.

Polymer bonded mineral materials are available as panels with a thickness between 4 mm and 20 mm, and as moulded parts (e.g. wash basins). They are usually applied to wood based panels and can be joined by adhesion and flush trimming. Large scale components can be manufactured using this process. To obtain straight and scratch-free saw cuts, AS foil vibration damped sawblades are recommended.



Perlite panel

Perlite-based fire protection board
A characteristic of this material is that it has a highly abrasive action on the tool body. Circular sawblades' bodies are particularly vulnerable to this problem. The gullet is eroded and as a result, the tooth breaks away although the carbide tip has not reached the wear limit. That is the reason why the use of special tool design with wear-protected basic-bodies and jaws are recommended.



Plaster board / gypsum board

Regular and fibre reinforced plaster board
These materials are machined in dry and „wet" condition. In the wet condition, tungsten carbide is recommended as a cutting material. Diamond is suitable as a cutting material for dry but not wet machining.

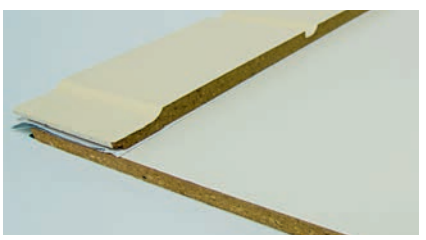

Cement fibre board

Fibre reinforced cement slabs
One of the special properties of fibre reinforced cement panels is their high density. If unsuitable machine parameters are chosen, sparks may occur during machining. Tungsten carbide has only a short run time; thence diamond is preferred as cutting material even by power-driven hand tools or high-volume work.

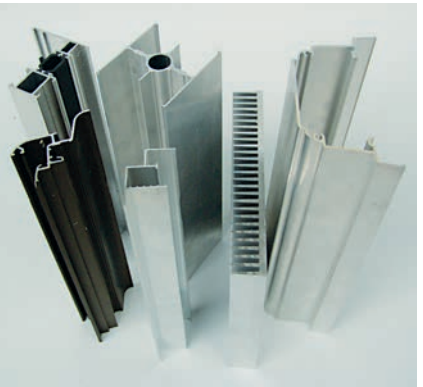

Aluminium extruded sections

Wrought aluminum alloys are the most common examples of **non-ferrous metals**. They exist as hollow or full profiles, as sheets or as surface layers or intermediate layers in wood materials.

Silicon is added to increase machinability. Si content ≥ 12% leads to increased cutting edge wear which is why diamond cutting edges are recommended. If the Si content ≥ 12%, the aluminum tends to „fuse“ to the cutting edge during machining and this quickly leads to build up on the edges. Tungsten carbide should be used, if possible, together with coolants (minimum quantity lubrication – MQL).
Tools with diamond cutting edges (PCD) are particularly suitable for dry machining. Build up on edges are avoided and better machining quality is achieved due to the extremely high thermal conductivity and low friction values of diamond. Sawblades with specially shaped teeth and small cutting angles (some negative) are employed in cutting hollow profiles to avoid the teeth hooking the thin web. Foil saws are particularly suited for scratch-free trim and mitre cuts due to their good vibration damping properties.

A **composite** consists of two or more materials which are combined to produce different material properties. Composites have different properties to the materials with which they are combined.

Essentially, there are two groups:

Composite layered materials, such as:
- Composite panels (e.g. plywood or wood core boards)
- Sandwich panels (stable outer layers with a soft core)
- Honeycomb panels
- Chipboards with aluminium barrier layers (vapour barrier)
- Window frames with insulation material as a middle layer
- Floor panels with a HDF core and a variety of surfaces (PVC, cork, felt®)

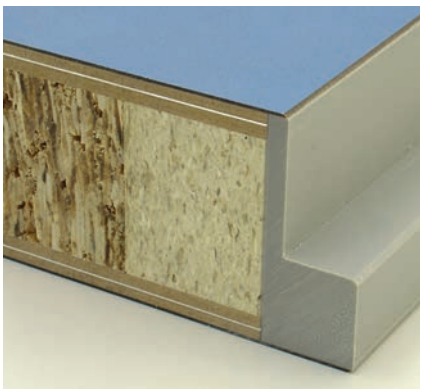

Layer composite working material

Composite fibre materials, such as:
- Carbon fibre reinforced plastic (CFRP)
- Glass reinforced plastic (GRP)
- Aramid fibre reinforced plastic
- Natural fibre reinforced plastic
- Wood plastic composites (WPC)
- Fibre cement boards

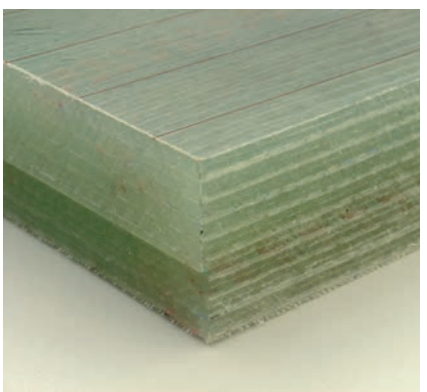

Fibre composite working material

The difficulty in terms of machining is a result of the often conflicting requirements of the individual material components concerning the cutting edges, meaning the tools usually have to be specially designed for particular composites. In the case of composite layered materials, a variety of cutting materials can be employed at the same time to machine the different layers (so called hybrid tools). Because of the different strengths of the individual components, there is often the risk of delamination from the cutting forces.

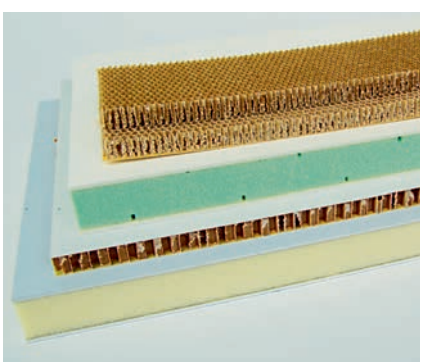

Lightweight working material with honeycomb or foam core

Profit is made at the cutting edge! Wear resistant cutting materials with sharp cutting edges guarantee long tool life and high surface quality. The full potential of a cutting material needs the correct cutting edge geometry, and in turn, is dependent on the machining process and the properties of the material being shaped.

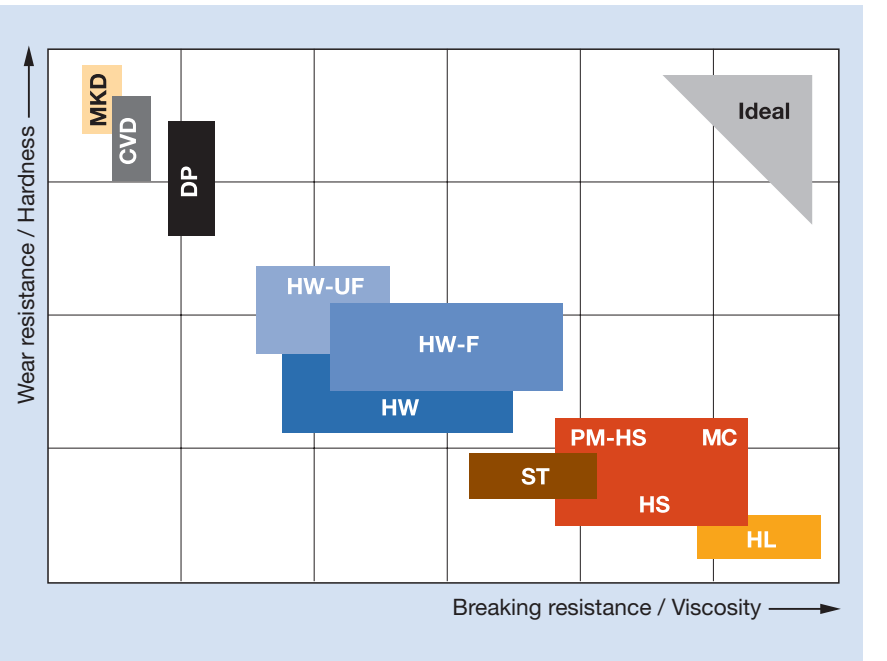

Diagram: Classification of the tungsten carbides in cutting groups as per ISO 513
K-grade: WC + binders
P- and M-grade: Additionally with WC-TiC and WC-TaC mixed crystals for higher temperature strength

Cutting materials for processing wood and plastics
The ideal cutting material should be hard and tough at the same time, but an „all-purpose material" of this kind simply does not exist. Today the choice of woodworking cutting materials range from tough tool steel to the hardest material in the world, diamond. The wide variety of workpiece materials and tool designs need all of these cutting materials:

Group	Application / working material	Code	Hardness	Viscosity
P	Steel, steel casting, long-chipping, malleable iron	P01	↑	↓
		P10		
		P20		
		P30		
		P40		
M	Steel, steel casting, austenitic manganese steel, austenitic steel, free cutting steel, alloyed grey iron	M10	↑	↓
		M20		
		M30		
		M40		
K	grey iron, chilled iron, short-chipping malleable iron, hardened steel, **non-ferrous metals, plastics, wood, wood-derived materials**	K01	↑	↓
		K05		
		K10		
		K20		
		K30		
		K40		

Cutting material with abbreviation	Composition, manufacture	Characteristics and possible use
SP Alloy tool steel	alloy content < 5% (C > 0.6%). Few carbides, therefore only low hardness and heat resistance. Manufactured in a molten-metallurgical process.	Hardenable up to 60 HRC. For solid wood processing in the craft sector, e.g. as a profile knife for universal cutterheads.
HL High-alloy tool steel	alloy content > 5% Alloy elements Cr, Mo, W and carbon form carbides which allow for hardness and wear resistance. At least 1 alloy element > 5% e.g. B 12% Cr and 2% C. Manufactured in a molten-metallurgical process.	Hardenable up to 63 HRC. Very corrosion resistant from high Cr content. Preferably used in planing mills for soft woods, e.g. solid cutter for manufacturing tongue and groove boards at high feed speed.
HS High performance high speed steel (HSS)	alloy content > 12% Alloy elements W, Mo, V, Co and carbon form carbides which allow for hardness and wear resistance. Manufactured in a molten-metallurgical process, followed by machining processes - linear distribution of the carbides manufactured in a powder-metallurgical process (PM-HS) - higher alloy contents possible, homogen distribution of carbides.	Hardenable up to 65 HRC. Preferably used for solid wood processing, mainly soft woods, e.g. planers, jointing cutters, profile blanks or tipped profile cutters. Considerably longer tool life compared to HL steel. The best relation between toughness and hardness is achieved with HS steel manufactured in a power-metallurgical process (PM HS).
ST Cobalt-based cast alloys	Almost completely non-ferrous alloys of: Co, W, Cr. Manufactured in a melting process.	Hardness 40 to 58 HRC. Particularly corrosion and temperature resistant, tough (small cutting angles possible). Typical applications: Processing of fibrous or damp, acidic woods in sawmills or planing mills, and machining oak, Meranti or poplar.

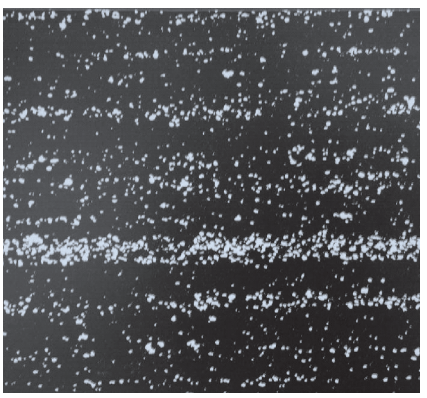

Roco-shaped structure for melting made HS steel

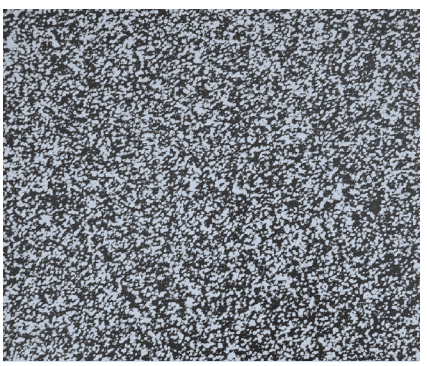

Homogenous structure for PM-HS Steel

11.2 Cutting materials

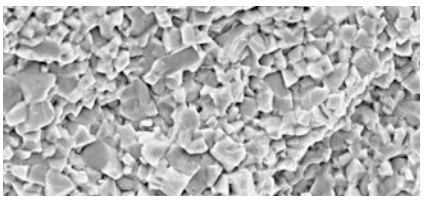

Fracture of a standard tungsten carbide.

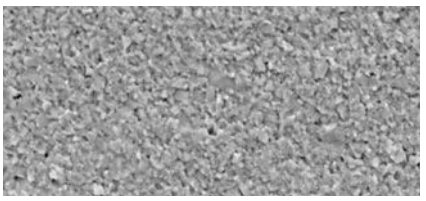

Fracture of an UF-tungsten carbide.



Sharp-edged wear on a coated HS edge.

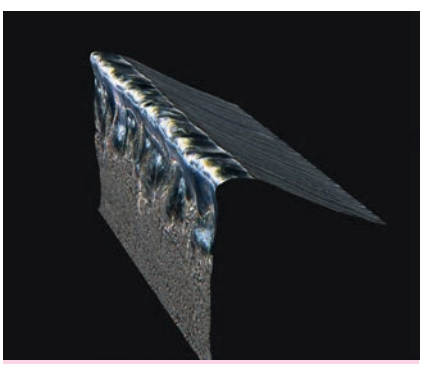

Rounding- and erosion wear on an uncoated HS edge.

Cutting material with abbreviation	Composition, manufacture	Characteristics and possible use
HW Carbide metals	Sintered materials composed of metal carbides and metallic binders (mainly WC + Co). Manufactured in a powder-metallurgical process by mixing and pressing the basic powder materials, followed by sintering at high pressures and temperatures.	Hardness between HV 1300 and 2500. Hardness and toughness can be varied over a wide range by altering the grain size and quantity of the binder in the mix. Universal cutting material for wood processing with wide range of application from knotty softwood with glued joints to panel materials and solid plastics. Ultra fine carbide metals allow for very sharp cutting edges as a prerequisite for paintable surfaces.
SC (MC) Steel, coated **HC** Tungsten carbides, coated	2 – 3 µm thick hard material coating on the blade. Coating materials: Nitrides, carbides, carbon nitrides or oxygen nitrides from the elements Ti, Al, Cr, Zr. Manufactured in a vacuum coating process. A new cutting material is created by the coating. The substrate is no longer solely responsible for the wear resistance but assumes a supporting function for the coating.	Surface hardness between HV 1600 and 3500. The chemical and abrasive wear resistance of the substrate at the surface of the blade is significantly increased. The edges remain sharp longer and friction is reduced. Performance times can be improved five fold compared with uncoated tools. This performance is retained even after sharpening. Preferred applications: solid wood, thermoplastics, non-ferrous metals

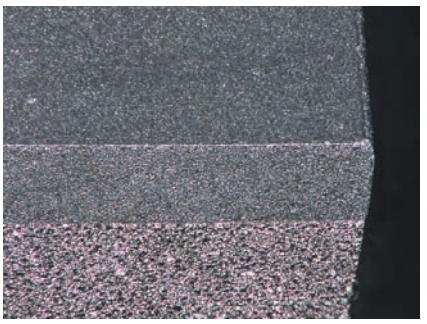

DP edge polycrystalline diamond layer (on top) sintered on to a tungsten carbide substrate (on bottom)

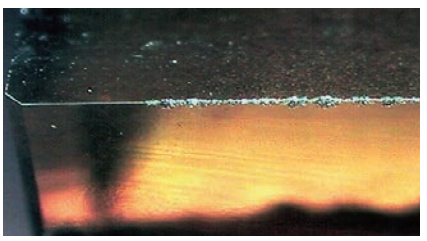

DM edge - monocrystalline synthetic diamond

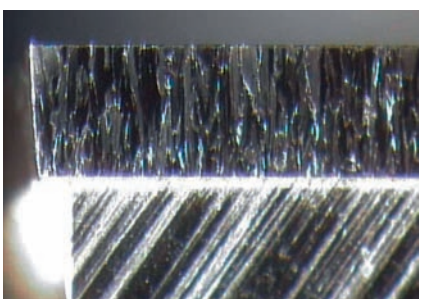

CVD diamond layer of columnar diamond crystalls, soldered on tungsten carbide

Cutting material with abbreviation	Composition, manufacture	Characteristics and possible use
DP Polycrystalline diamond (PCD)	Sintered layer (0.3 – 0.6 mm) composed of diamond crystals on tungsten metal surface. Diamond grain size: 1 – 30 µm. Manufactured in high-pressure synthesis process. Diamond grains sinter among each other forming a layer and are combined with a tungsten carbide substrate. Due to the diffusion of Co from the tungsten carbide between the diamond grains, the diamond becomes conductive and may be processed by spark erosion.	Composed of the hardest material, wear starts at grain boundaries, very good thermal conductivity. Hardness and toughness can be varied within certain ranges by altering the grain size. The field of application of DP cutting materials ranges from solid woods, chipboards and fibre boards to very abrasive materials such as fibre cement boards, laminate floors or fibre reinforced plastics (composites). Excellent suitability for dry processing of non-ferrous metals.
DM Monocrystalline diamond	Diamond monocrystal (structure with grain boundaries). Manufactured in a high pressure synthesis process. Only available in dimensions of a few millimeters. Processing only possible by grinding with diamond.	Harder than DP. Very smooth cutting edges can be produced as there are no grain boundaries. Can be used for very abrasive laminate overlays or for a polished finish on plastics and non-ferrous metals.
CVD Polycrystalline diamond layer	0.5 mm thick diamond layer composed of columnar diamond crystals grown together, brazed on a tungsten metal support. Manufactured in a plasma CVD coating process. Due to doping with boron, conductible and erodable.	Harder than DP and DM as there is no metallic binder phase and the diamond grains with their crystal grid layer levels are positioned randomly. Used for particular laminate's overlays.

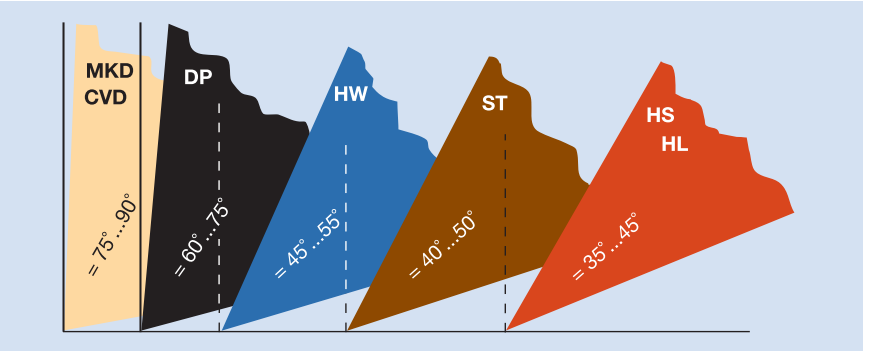

Specific cutting material geometries
Due to the relation between hardness and toughness, there is a specific angle geometry for every cutting material to achieve optimum cutting performance. Hard, brittle cutting materials require a stable wedge angle so the edges cannot break off. Less hard, but tougher cutting materials require larger cutting angles to maintain a cutting edge. Tungsten carbides offer the highest degree of design freedom and can be used for almost every application.

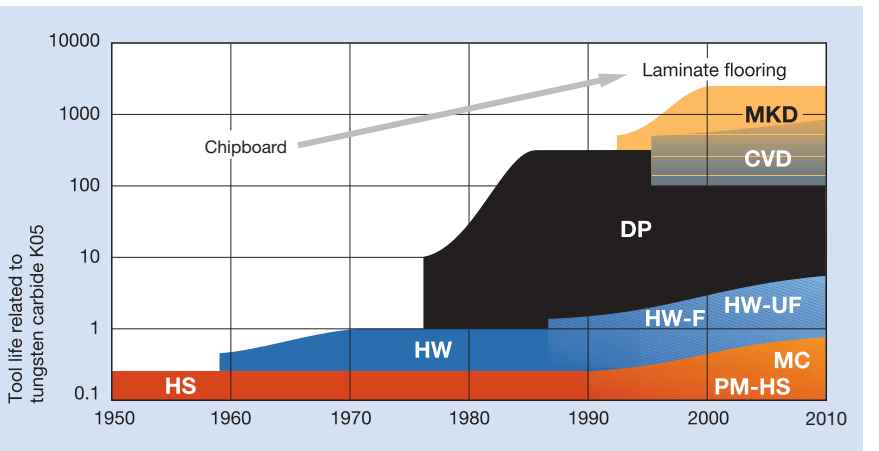

Progress in tool life by different cutting materials
All cutting material developments are aimed at longer tool life. New work piece materials often call for new cutting materials. Chipboard led to the use of tungsten carbide and later to polycrystalline diamond, laminate flooring to monocrystalline and CVD diamond and plywoods to fine grain tungsten. In the 50 years of panel material development, tool life has increased a thousand fold.

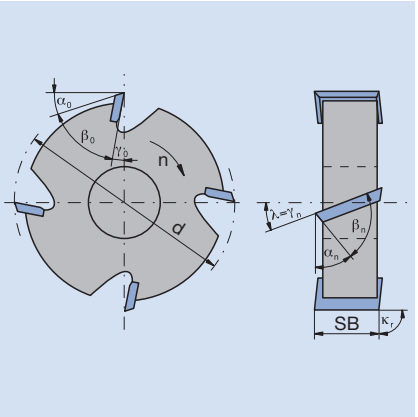

Cutting geometry and description of angles

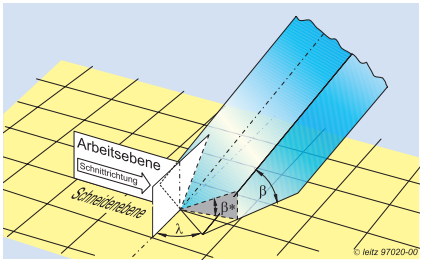

„Shear cut“ - the shear angle effectuates a reduction of the medge angle in cutting direction

Größe	Symbol	Bedeutung
Cutting angle (Gamma)	γ	Influences cutting force and pre-splitting. For cross grain and tough materials rather large cutting angles, for hard, brittle materials rather small cutting angles.
Wedge angle (Beta)	β	Important for cutting edge stability. Cutting material specific minimum wedge angle required, so that cutting edge does not break off.
Clearance angle (Alpha)	α	Reduces friction between blade and workpiece and resin build up.
Shear angle (Lambda)	λ	Creates a „pulling cut“. Acts as cutting angle for the leading secondary cutting edge (cutting flange). Influences the chip flow in axial direction.
Edge setting angle (Kappa)	κ_r	Enlarges the start of the cutting angle of the blade. For edge setting angles < 10°, almost no cutting actions can be seen (e.g. edging tools).
Secondary cutting edge angle	γ_N	Corresponds to the shear angle of the main cutting edge.
Leading edge angle	β_N	Important for the stability of the secondary cutting edge. Normally larger than the secondary wedge angle of the main cutting edge.
Secondary cutting edge clearance angle	α_N	Reduces friction between secondary cutting edge and workpiece and resin build up.
Diameter	d	Regarding profile tools, the zero diameter (mostly the smallest diameter) sets the processing position of the tool. The maximum diameter is set by the permissible rotational speed n_{max} and for collision factors.
Cutting width	SB	Determines the maximum processing width of the tool.

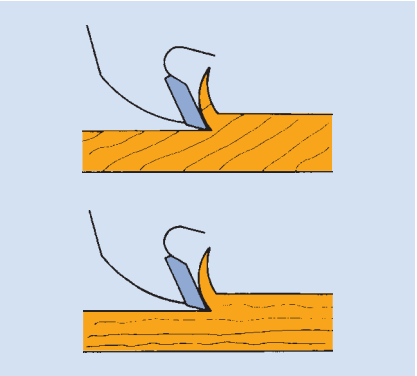

Longitudinal cut with the grain

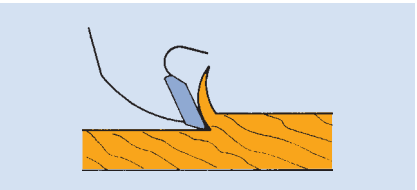

Longitudinal cut against the grain

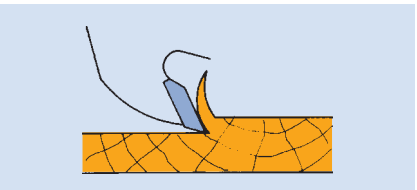

Cross-cut

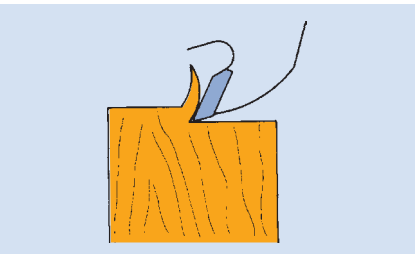

Cutting in end grain

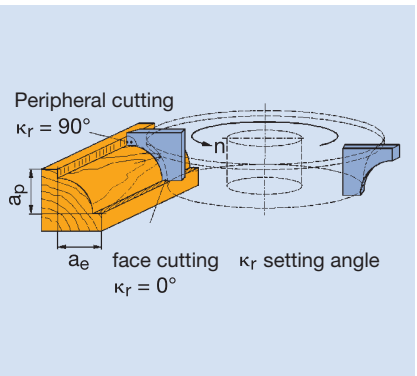

Cutting procedure on the example of „profile cutting“

Due to the anisotropy of the wood as a naturally grown material, it can basically be divided into **three cutting directions:**

a) Cutting along the grain
1) With the fibres
Easy to cut. Excellent surface quality and high feed rates possible.

2) Against the fibres
Difficult to cut, as the fibres tend to lift. If possible this cutting direction should be avoided by using alternatives, for example changing the direction of rotation (against feed/with feed).

b) Cutting across the grain
Low cutting forces, but the surface finish is slightly rough surface as wood fibres are „peeled off”.

c) Cutting the end grain
The fibres are cut vertically to the fibre direction. The result are high cutting forces and slightly rough surface finishes. When the cut is completed, fibres may be torn out which is why it is cut with smaller tooth advances and using against a wood backing piece.

In the case of knotty wood and around branches, all cutting directions may occur at the same time. Due to specific cutting techniques and tool designs for pre- and finish-cutting, a continuosly good processing quality is achieved.

Due to the cutting surface area there are different **cutting applications**:

a) Peripheral cutting
The circumference of the cutting tool machines the workpiece. The circumference of the tool is surface determining. The tool’s axis of rotation and the surface of the workpiece are vertical to each other. The enclosed angle, $\kappa_r = 90°$, is called the setting angle.
Examples: planing, jointing.

b) Surface planing
The face of the cutting tool machines the workpiece surface. The front face of the tool is surface determining. The tool’s axis of rotation and the workpiece surface are parallel to each other. The enclosed angle (setting angle) is $\kappa_r = 0°$.
Examples: cutting, circular saws, edging.

c) Profile cutting
Profiling is a combination of peripheral and face cutting, irrespective of whether the tools have shanks or bores. In general, there is a smooth transition from peripheral to face cutting in profiling. Any setting angle between ($0° \leq \kappa_r \leq 90°$) can occur.
Examples: round profiles, finger profiles or any decorative profiles - but also bevelling, rebating, grooving or slotting.

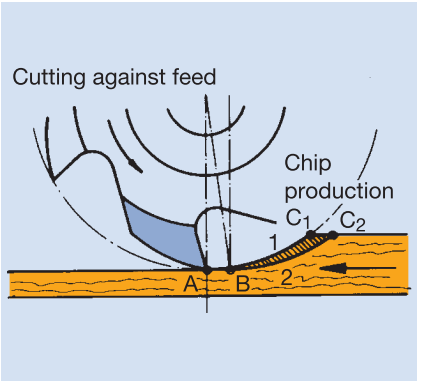

Chip formation when running against feed

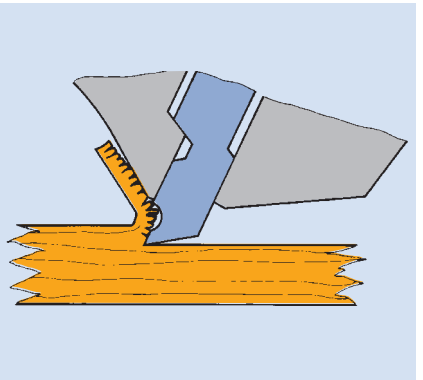

Effect of a chip breaker

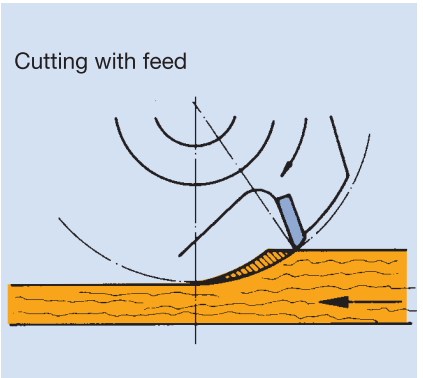

Chip formation when running with feed

a) Cutting against the feed
The direction of the tool cut is opposite to the direction of workpiece feed. Initially the cut has zero thickness. Before a chip can form and move across the cutting surface, the cutting edge presses against the workpiece at the start of the cutting angle. The final workpiece surface is created during this initial phase. As the cutting action increases, the cut becomes more stable with the increasing cut thickness. The final stage of the cutting process is when the chip breaks away; this is known as pre-splitting.

AB: friction zone.
B, C1, C2: elongated chip.

Advantages:
Pre-splitting can help reduce cutting forces, the required motor power, and increase tool life. A lower drive output is required.

Disadvantages:
If the direction of the fibres and the pre splitting direction runs from the cutting edge toward the „go" side of the workpiece, pre-splitting creates a rough surface with torn fibres.

A chip breaker ahead of the cutting edge helps form the chip earlier and reduce pre-splitting.

Since there are constantly changing fibre and feed directions during stationary machining on CNC machining centres, special cutting techniques are necessary to avoid unfavourable fibre cutting angles.

b) Cutting with the feed
For mechanical feed only.

The tool cutting direction is the same as the direction of workpiece feed. Cutting starts at the maximum chip thickness, falling to zero by the time the cut is completed. With increasing cutting action, the chip becomes thinner and finer and with less risk of pre splitting.

Advantages:
Comparatively good surfaces are obtained when there is an unfavourable fibre direction. Lower feed forces required, allowing an increase in the feed speed.

Disadvantages:
The cutters are subject to more severe loads and wear quicker because of the reduced pre splitting. The tool life is approximately 30% shorter compared to cutting against the feed.

There is the danger of tool kick back that means hooking of the cutting edges and acceleration of the workpiece to cutting speed. Cutting against the feed is recommended for manual feed to prevent accidents.

During the peripheral cutting process (e.g. planing, jointing, profiling), the workpieces's surface finish is produced by the peripheral blades. By superimposing tool rotation on the linear feed movement of the workpiece, a succession of cutting actions produce a wave effect on the surface of the workpiece. The pitch, depth and uniformity of these planing or cutter marks determine the machined surface quality. The dimensions of the cutter marks are a combination of the cutting radius, the effective number of teeth, spindle rotating speed and feed rate.

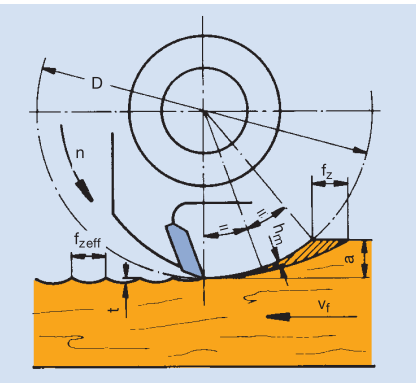

Finish formation and cutting sizes on the example of „chamfering“

These considerations also apply to face cutting tools such as cutters or circular saw blades. The concentric run-out is replaced by the axial run-out.

Terms and formulae relations:

v_c	=	$\pi \cdot D \cdot n / (1000 \cdot 60)$	Cutting speed [m s^{-1}]
n	=	$v_c / (\pi \cdot D) \cdot (1000 \cdot 60)$	Speed of rotation [min^{-1}]
v_f	=	$f_z \cdot n \cdot Z / 1000$	Feed rate [m min^{-1}]
f_z	=	$v_f / (n \cdot Z) \cdot 1000$	Tooth advance [mm]
f	=	$f_z \cdot z = v_f / n \cdot 1000$	Feed per rotation [mm] cutter mark length of jointed tools
f_{zeff}	=	$f_z \cdot 1 = v_f / n \cdot 1000$	Effective tooth feed visible on the workpiece [mm] (cutter mark length) [mm]
t	=	$f_z^2 / (4 \cdot D)$	Depth of knife marks [mm]
h_m	=	$f_z \sqrt{(a_e / D)}$	Mean cutting thickness [mm]
a_e	=		Radial cutting action, cutting depth [mm]
a_p	=		Axial cutting action, cutting width

These formulae have numerical values.
All values must be entered using the units of measurement shown in the square brackets [ ].

Top quality surfaces have cutter marks at a regular pitch between 1.3 and 1.7 mm. As the cutter mark length increases, surface finish quality deteriorates but tool life increases. As the cutter mark length decreases, the mean cutting thickness h_m decreases as well. As a result, friction and wear increase and tool life decreases.

Single knife finish
Due to the production tolerances, the cutting edges on a multi-knife tool do not all have the same cutting radius. With conventional tool clamping (clearance fit between spindle and tool), only one cutter normally creates the workpiece surface. This is known as a single knife finish. The other cutting knives contribute to the cutting process, but do not determine the finish surface quality of the workpiece. The cutter that projects farthest removes traces of the cutting action of the other cutters.

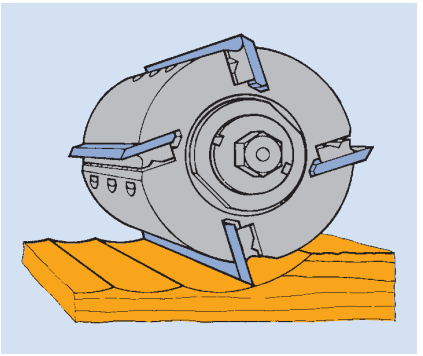

Finish formation for conventionally clamped tools

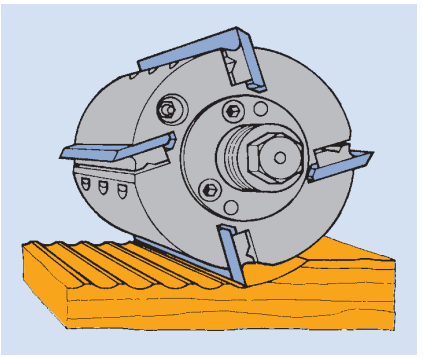

Finish formation for high precision tools with centering adaptor

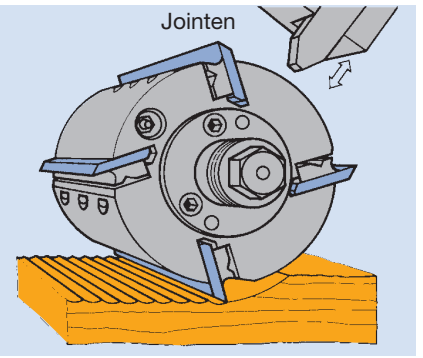

Finish formation for jointed tools with centering adaptor



Quality criteria „waviness“

The visible cutter marks on the workpiece f_{zeff} correspond to a single knife finish (Z = 1). As the cutter mark pitch determines the quality of the workpiece's surface, the feed rate is equivalent to Z = 1 in these conditions.

-> $f_{zeff} = v_f / (n \times 1) \times 1000 = f$

(f = feed per tool revolution)

Multi knife finish

Tool concentric run-out tolerance is significantly reduced by a clamping system that centres the tool on the spindle, such as a hydro clamping system, shrink-fit clamping or HSK. Hydro clamping makes the cutting action of several cutters visible on the workpiece surface. The number and spacing of these is undefined (not regular) because of the remaining run-out tolerance. If the tool is carefully balanced (G 6.3 or better), an adequate finish can be obtained for many applications from this multi knife machining process if the feed rate is high, for example for tongue and groove panel processing or the production of linear mouldings.

A run-out tolerance of zero can be achieved by subsequently dressing the cutting edges within the µm range known as jointing which is performed at full operational speed on the machine spindle. The knife marks are then at uniform intervals on the workpiece surface. This technology enables the feed rate to be multiplied by the number of cutters, with the quality is equivalent to a single knife finish.

-> $f_{zeff} = v_f / (n \times Z) \times 1000 = f_z$

(f_z = feed per tool tooth)

Criteria for the processing quality

Tool parameters and tool life are measured by the processing quality. For judging surfaces, e.g. during planing, the distance and the depth of the visible cutting actions are decisive. Regarding coated panels, workpiece edges without break outs are important.

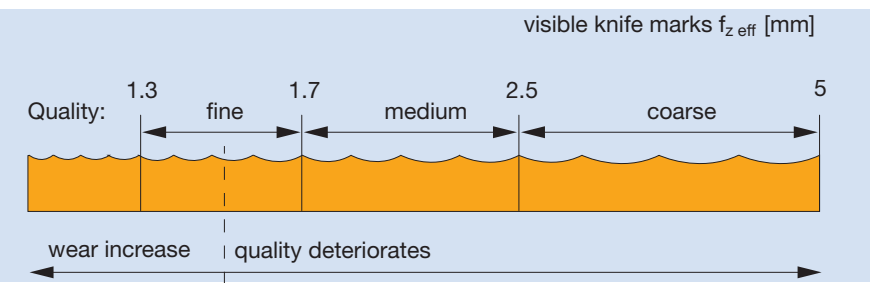

The cutting action of the highest protruding edge is responsible for the **distance of the visible cutting actions** (knife marks). The remaining blades produce chips; their start of the cutting angle does not reach the machined surface. Therefore, the jointing technique is in particular used for planing so that all edges process the planed surface to the same extent.

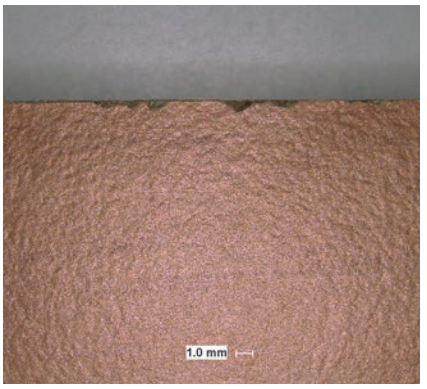

Quality criterion of „break outs“

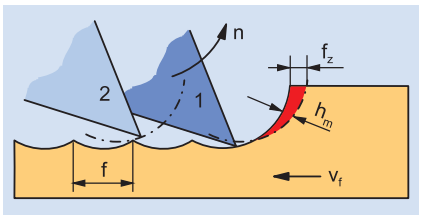

The tooth feed rate f_z defines the medium chip thickness h_m

$$f_z = \frac{V_f}{n \times Z}$$

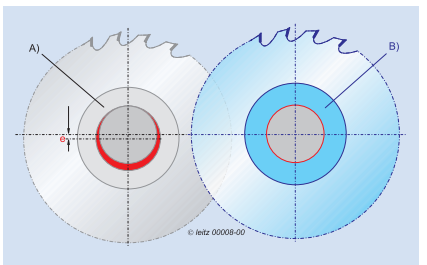

Centering tool interface
A) conventional interface with fitting tolerance „e“
B) Centering interface without fitting tolerance
Balancing quality: G = e · w

The **depth of the start of the cutting angle** is determined by the tool diameter and by imbalances and vibrations.

For the quality criteria **tear outs or edge break outs**, the mean cutting thickness h_m is of particular importance. As the mean cutting thickness increases, the woodchips become more stable and tend to break and pre-split. A result is damage to the machined workpiece, that means tear outs or splinters in solid wood and edge break outs in panel materials. Therefore, tooth advance may not be increased arbitrarily. The possible tooth advance depends on the tool diameter and the start of the cutting angle of the tool cutting edges. There are specific guide values for the tooth advance f_z for each workpiece depending on the processing method such as sawing, cutting, planing, finish milling, drilling.

Imbalance and run out tolerances result in different mean cutting thicknesses on the cutting edges of a tool. The thickest woodchips limit the cutting performance. The better the concentric and the axial run-out of the tool cutting edges, the more even the mean cutting thickness of each edge and the higher the possible tooth advance f_z is. With a constant spindle speed n and tooth number Z, this means: Tools with a high imbalance and a small run-out tolerance allow for higher feed rates. At the same time, the higher feed speed is connected with enlargement of the start of the cutting angles with the side effect that further edges (even if with irregular distances) are involved in creating the surface finish. The law of the „single knife finish” no longer applies.

Centred mounting sleeves such as a hydro clamping system, shrink-fit clamping or HSK eliminate the tolerance between the tool and the machine spindle and are required for low imbalance (G 6.3 mm s^{-1} or better) and for accurate concentric and axial run-out of the edges (0.02 mm or better). The tools must be sharpened mounted on this centred mounting sleeve.

If surfaces without tear outs and edges without break outs are a quality criteria and the processed surfaces are flat, then tools manufactured this way may be used for much higher feed speeds compared to a single knife finish. Examples for this include high toothed profile cutters for panel manufacture (laminate panels, tongue and groove boards) which are machined without jointing at feed speeds above 200 m min^{-1} or cutter tools for forming furniture panels which achieve speeds up to 100 m min^{-1}.

When choosing the appropriate machine tool, many interdependent factors must be considered. The goal to achieve a first-class wood surface finish, a saw cut surface without tear outs and an accurate drilling result requires that the cutting material, tool and machine operating data have been adapted to the material characteristics and to each other. Thus, the finished machine tool is the result of analysis and evaluations before the machine is built.

Determination of cutting speed in relation to speed of rotation and tool diameter

The graph shows the cutting speed in m s^{-1} in relation to the speed of rotation and tool diameter. The speed required can be determined if the tool diameter and cutting speed are known. Similarly, the tool diameter can be determined if the speed of rotation and cutting speed are given.

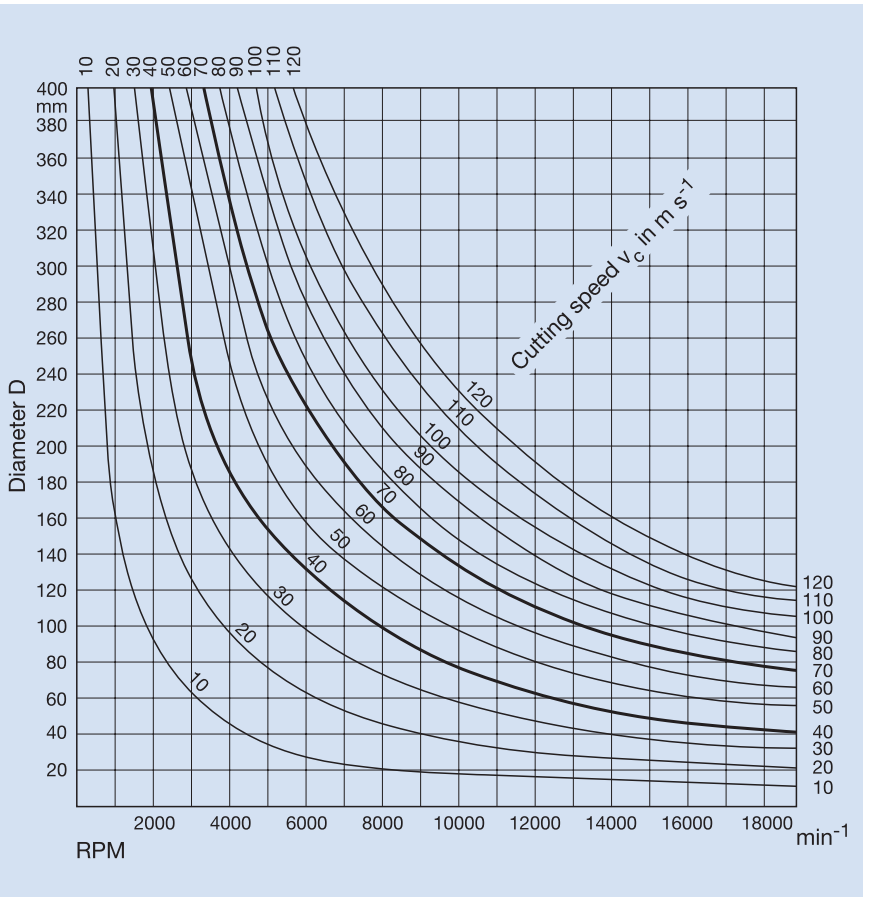

Reading examples:

	D mm	n min^{-1}	v_c m s^{-1}
Circular sawblades	350	6000	110
Cutting tools	160	9000	76
Shank router cutters	52	18000	50

Cutting speed guide values v_c

Material	Cutting v_c [m s^{-1}]	Sawing v_c [m s^{-1}]
Softwoods	50-90	60-100
Hardwoods	50-80	60-100
Coreboards	60-90	60-100
Chipboards and fibreboards	60-90	60-90
MDF	60-90	60-90
Panel materials, coated	60-90	60-90
Thermoplastics	40-60	40-70
Thermosets	30-50	40-60
Aluminium	30-60	60-90

The guide values given here apply to tools with a diameter > 100 mm. Regarding shank tools, the recommended cutting speeds are considerably lower due to the small tool diameter and the higher friction (router cutter 10 to 40 m s^{-1}, drill 5 to 10 m s^{-1}).

Parameters for cutting tools
Tooth progression, feed rate, speed of rotation, number of teeth

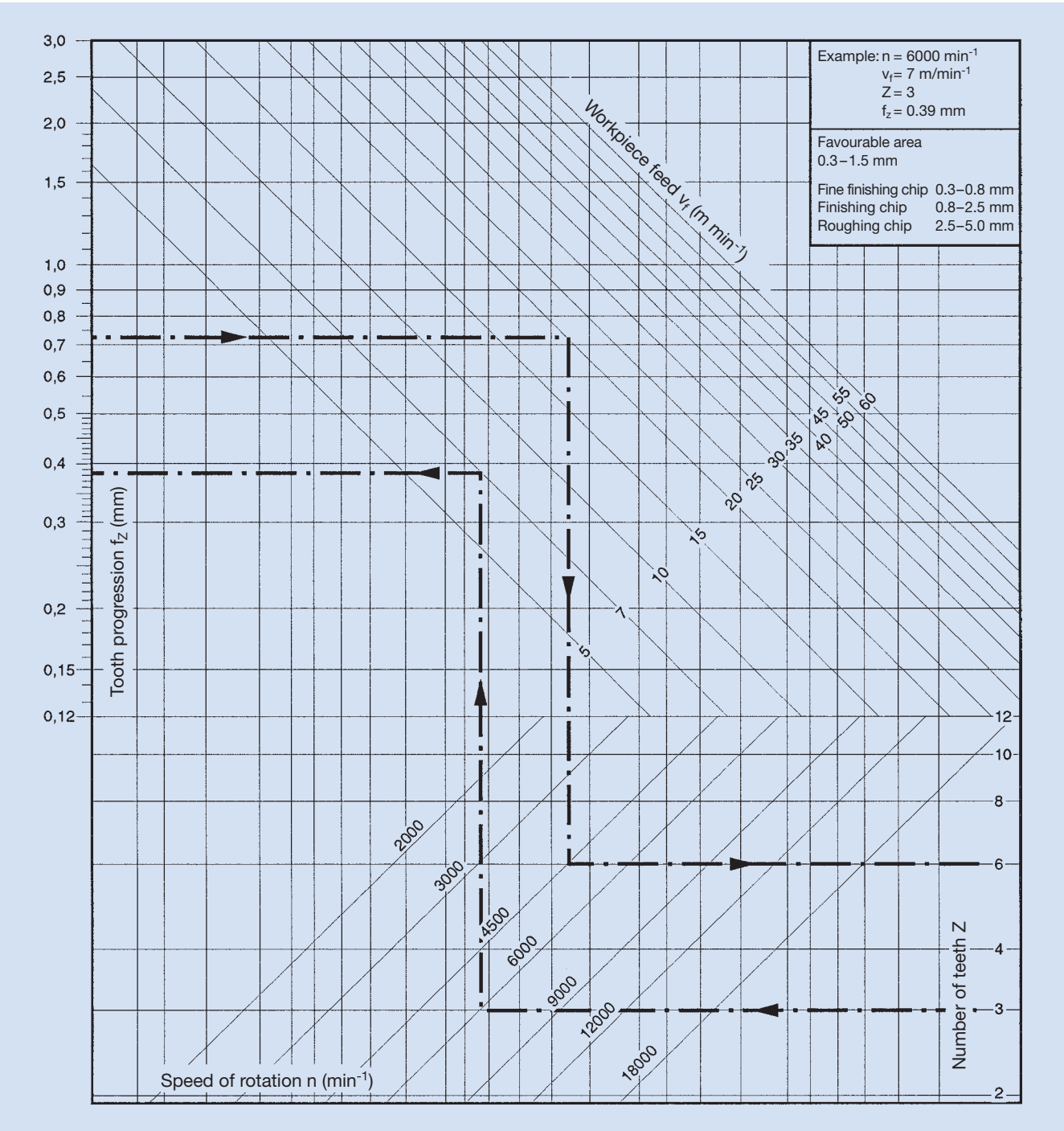

Parameters for circular sawblades
Tooth progression, feed rate, speed of rotation, number of teeth

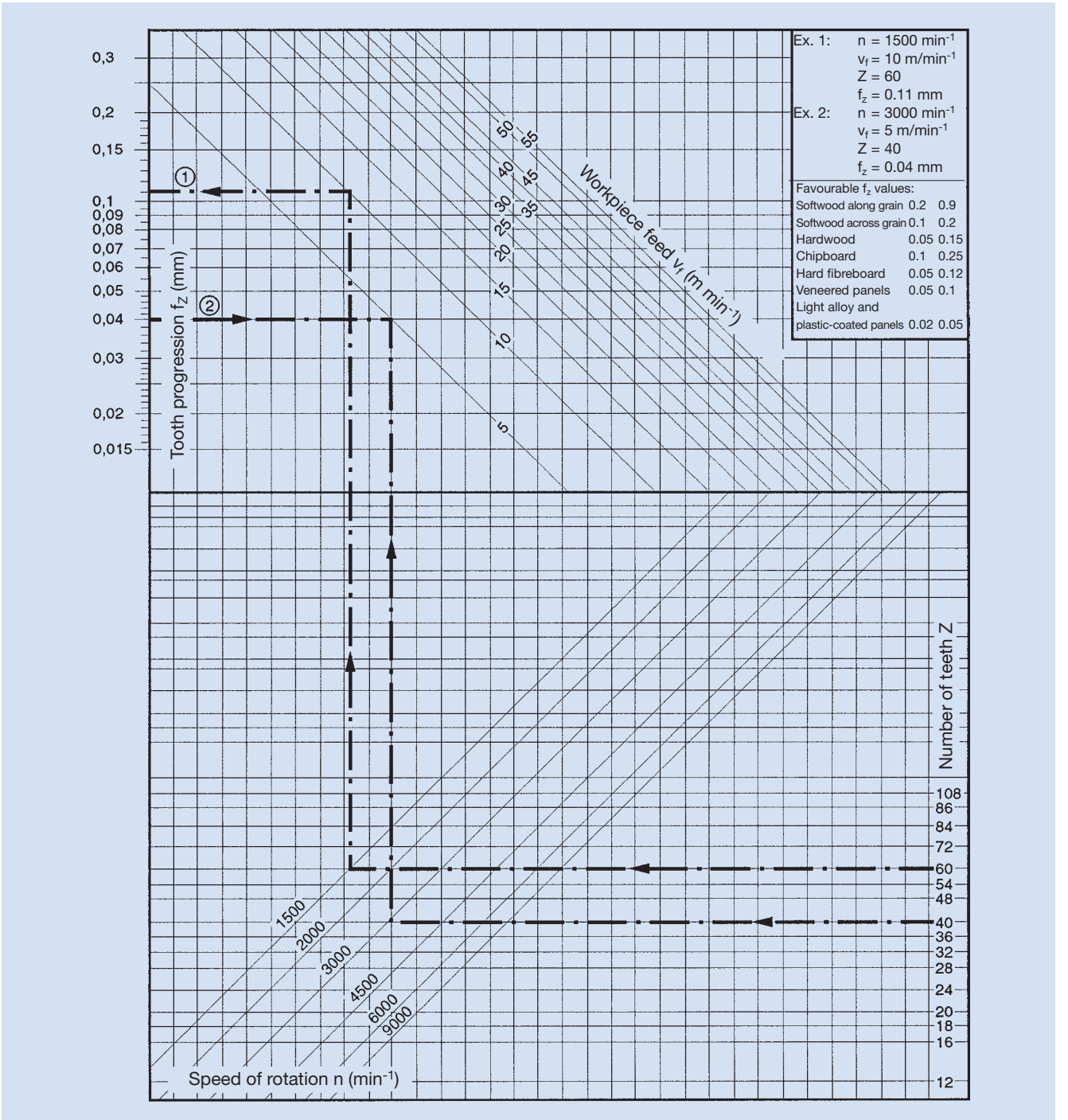



Solid tool
Example: HL profile cutter



Solid tool
Example: HW shank router cutter

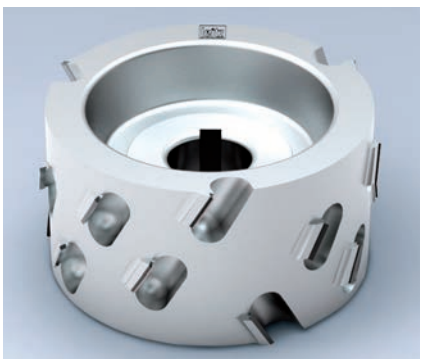

Tipped tool
Example: DP grooving cutter



Tipped tool
Example: HS minifinger cutter

Regarding tool types, the machine tools are distinguished by design and construction design.

Single part tools / solid tools
Solid tools are made from one piece. The basic body and the edges are of the same material. Typical examples of this tool type are profile cutters of HL steel, routers and drills of HS steel or solid tungsten carbide. All have been designed as resharpenable tools.

Profile cutters of HL steel are mainly used for profiling tongue and groove boards in the primary industries. They have a high number of teeth and a very large resharpening area so economical when it comes to high running performance. The one piece design allows for a high precision concentric and axial run-out which is why they can be used for feed speeds up to 200 m min^{-1} without jointing. A key feature of these cutters is the spiral relief in the profile. The free area of the edges is convex and follows a spiral form. The cutting edges are resharpened by turning the tools around its rotational axis. This ensures the wedge angle and cutting profile remain constant.

The reasons for a one piece design of routers and drills are different. Because of the small diameters, the most important factor is stiffness which is higher with a body made of HS steel or tungsten carbide compared to tempering steel. More efficient production is also very important.

Tipped tools / progression tools
Regarding composite tools, the edges and basic tool body are made of different materials. They are jointed to each other by brazing or adhesive. Typical examples of this tool type are circular sawblades with tungsten carbide or diamond tips and HS, HW or DP tipped cutters as well as HW tipped drills.

Brazing is at high temperatures between 650°C and 700°C. Due to the tensions occurring when the material is cooling down, the cutting material must have a particular toughness and may not exceed a certain thickness. An adhesive joint has the advantage that it can be done at lower temperatures. In doing so, the joint has less tensions so harder and more wear resistant materials can be used, in particular for tungsten carbide tools.

Tools tipped with HS or HW edges are mostly resharpened on the cutting face. Regarding circular sawblades and grooving cutters, it is recommended to also sharpen on the top surface (relation between face and top approximately 2:1) to maximise the use of the cutting material and to achieve longer tool life. As the free surface has a straight or convex relief, the profile changes slightly when sharpening the cutting face. Regarding glue joint profiles or finger joint profiles, both tools of a pair are always resharpened to the same extent to make sure the joint profiles match each other.

This is not the case with diamond tools. Here, the DP edges with the tungsten carbide support are brazed to the panel seatings so that the thin diamond layer forms the cutting surface.

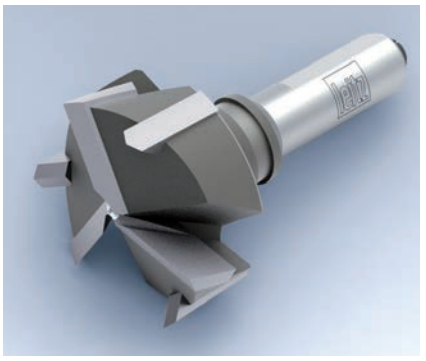

Tipped tool
Example: HW hinge boring bit

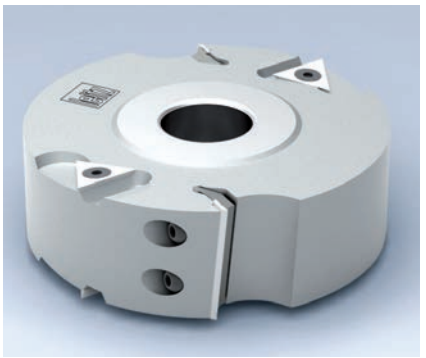

Turnblade tool for jointing and rebating



Profile cutterhead for backserrated blank knives



Profile cutterhead with throwaway knives and turnblade spurs

Resharpening may only be done on the top. As the edges always require a certain projection from the body of the tool, this must be adjusted during sharpening. When sharpening the top, the original profile may be kept. Only the cutting angle is increased.

Closed profiles with a steep run out angle must have a lateral free angle in addition to the radial free angle so that the tool does not „burn". Such tools change their width when being sharpened. So, two piece tool designs are practicable to compensate for the change in profile width.

Cutterheads / assembled tools
Assembled tools are also known as cutterheads since the cutting edges are inserted as detachable knifes. It is distinguished between turnblade knives or throwaway system where the knives cannot be resharpened, and resharpenable knife head systems. All cutting materials may be used. Knife head systems with tungsten carbide cutters are most common.

The advantage of knife head systems is that the tool body design can be reused and only worn knives must be replaced. Assembly and disassembly must be done carefully and under clean conditions to ensure accurate and safe positioning of the knives in the tool. The replacement of the knives is normally by the user, who is responsible for the accuracy and safety of his tools.

The simplest form of assembled tools are the turnblade tools. Standardised tungsten carbide knifes with 2 to 4 cutting edges are used as cutters. When worn, they may be turned 1 to 3 times. The main cutters are normally straight turnblades. For edge processing of rebates or grooves, spur cutters are used and for profile edges, radius or bevelling knives are used. Typical applications are jointing, rebating and grooving tools, but also simple window tools. By separating the profile into many standardised individual blades not adapted to the respective processing situation in respect to their geometry, only a medium processing quality can be achieved, in particular on rounds and profile edges.

Tools with resharpenable knives are, for example, profile cutterheads with serrated back HS or HW knives. These can be resharpened more than 30 times in the profile, keep their profile and are very economical. Furthermore, such systems are very flexible as knives with different profiles can be mounted in one basic body. A disadvantage is the change in diameter so the position of the machine spindles must be adjusted after every sharpening.

Cutterhead systems with throwaway knives do not have this disadvantage. These are normally HW blades. After changing the knives, all tool dimensions stay the same. However, this advantage is gained at the cost of a high consumption of expensive tungsten carbide so such tool systems have high operational costs. In addition, the knife profile is related to the profile of the tool body design. So as is the case with tipped tools, every profile requires a complete tool.



Multi purpose cutterhead with backing plates „VariForm“

A compromise are universal profile cutterheads in which the cutting plates are not support by the tool body design, but by profileable and replaceable supporting plates (example: VariForm). Such systems may be resharpened 2 to 3 times on the cutting surface if a minor change to profile and diameter is acceptable.

Resharpenable tools

It doesn`t matter if cutters or cutterhead systems, resharpenable tools use the expensive and valuable cutting materials in a more efficient way as throwaway tool systems.

For example a throwaway tool system with 2 mm tungsten carbide cutting edges waste 8 to 10 times more tungsten carbide material in tool life compared to a resharpenable tool system with a 5 mm tip hight. But after every resharpening the dimensions of the tool are changing and a new set up at tools and machines is necessary.

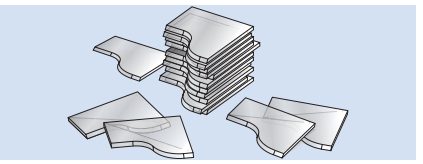

Throwaway tool System (2 mm)
Tungsten carbide consumption by 16 tool lives.

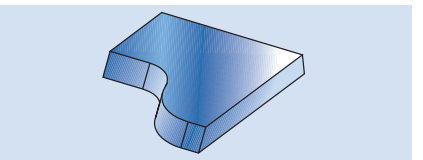

Resharpenable tool (5 mm)

Constant tools

Constant tools combine cost effectiveness of resharpenable systems with the handling advantages of throwaway systems. They are always designed as a cutterhead. A slot guides the knife position parallel to the clearance angle of the profile, so the knife always comes back to the same reference point after sharpening on the cutting face. This ensures that the profile and the diameter of the tool remain constant after sharpening. Adjustment of the spindle position is not required.

Examples for such self adjusting constant tools are the Leitz systems „ProFix“ for profile processing and „VariPlan” for planing.



Constant diameter tool
Example: Planerhead „VariPlan“

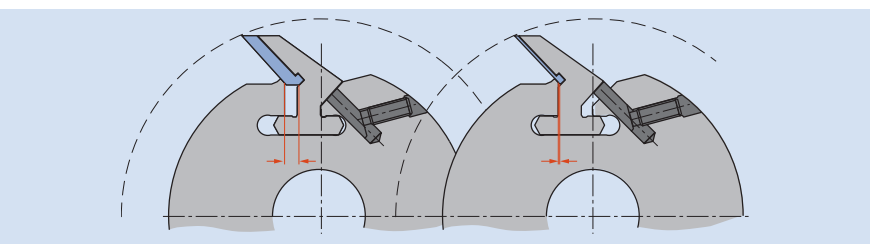

Functional principle: ProFix Constant diameter tool



Constant diameter tool
Example: Profile cutterhead „ProFix“

Another form of the constant tool are tools with adjustable knives. They are either adjusted to the diameter when installed (example: planing cutterhead with planer knives) or are moved to the extent of their wear before the sharpening process and then ground back to the nominal diameter (example: jointing cutterhead with cylindrical DP knife insertion).



Typical tooth shapes and applications

For special applications also sequences of various teeth can be used, combining several types of teeth (e.g. WZ/WZ/FZ). To protect the knife points against breakouts, al tooth shapes slightly can be bevelled (protecting bevel).

Circular sawblades

Circular sawblades for processing wood and plastics are progression tools. They consist of a saw plate with tungsten carbide or polycrystalline diamond teeth brazed to its circumference. They are used to separate workpieces. To keep the cutting loss and the cutting forces small, the aim is to keep the cutting width as small as possible. On the other hand, straight cuts free from scores require a certain blade stability; this invariably means a compromise between cutting width and saw diameter.

Depending on the material and geometry of the workpiece, the saw teeth differ in shape and geometry. Generally, positive cutting angles are used to keep the cutting forces low. For thin walled workpieces such as e.g. hollow profiles, negative cutting angles are required to prevent the saw from catching. The number of teeth depends on the requirements for cut quality. The rule of thumb is: the higher the number of teeth, the better the cut quality to be expected, and the lower the number of teeth, the smoother the saw cut.

Classification of typical teeth forms and applications:

	Tooth shape	Application
	Flat FZ	Solid wood, along and across grain.
	Alternate, positive WZ	Solid wood along and across grain as well as glued, wood products uncoated, plastic coated or veneered, plywood, multiplex, composite materials, laminated material.
	Alternate, negative WZ	Solid wood across grain, hollow plastic profiles, non-ferrous metal extruded profiles and tubes.
	Square/trapezoidal, positive FZ/TR	Wood products, uncoated, plastic coated or veneered, non-ferrous metal extruded profiles and tubes, non-ferrous metals, Al-PU sandwich panels, hollow plastic profiles, polymer plastics (Corian, Varicor etc.)
	Square/trapezoidal, negative FZ/TR	Non-ferrous metal extruded profiles and pipes, hollow plastic profiles, Al-PU sandwich panels.
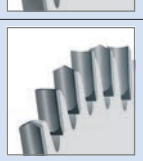	Inverted V/hollow ground HZ/DZ	Wood products, plastic-coated and veneered, coated profile strips (skirting boards).
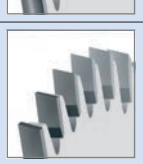	Flat, bevelled ES	Construction industry machine saws.

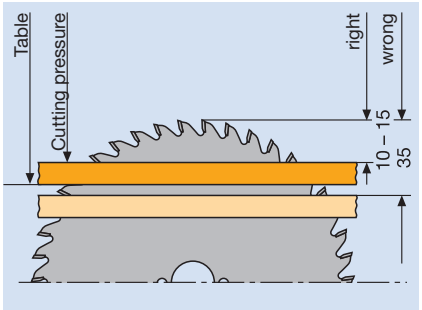

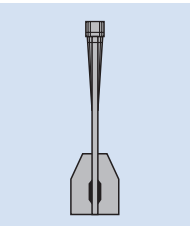

Sawblade without damping

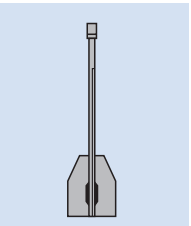

„Foil saw“ with good noise- and vibration damping



Thin kerf sawblade set to produce parquetry laminates

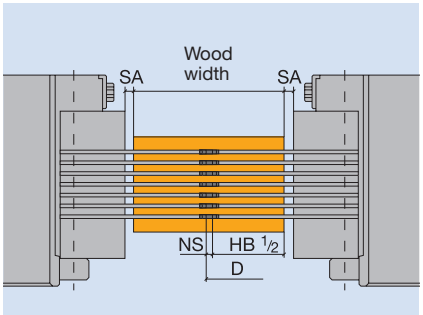

Inherent to the functional principle, the cutting edges on the tooth entry side are a better quality than the ones at the tooth exit side. By setting the projection of the teeth above the workpiece it is possible to influence the cut quality in certain areas. The point of reference here is a value of 10 to 15 mm. With a greater projection of the teeth, the quality at the exit side suffers, with a smaller projection quality at the entry side suffers. To achieve a cut edge without tear outs on both sides it is required to use scoring saws at the exit side of the main saw. These are sawblades with a small diameter but a greater cutting width than the main saw by 0.1 to 0.2 mm, scoring the workpieces with feed to a depth of 1 to 2 mm. To adjust the cutting width to that of the main sawblade, scoring saws are designed either in two parts or with a tapered tooth shape. Special concave tooth saws have been developed for panel saws without scoring saws; these saws enable cuts without tear outs to both sides when set correctly but have a comparatively short tool life.

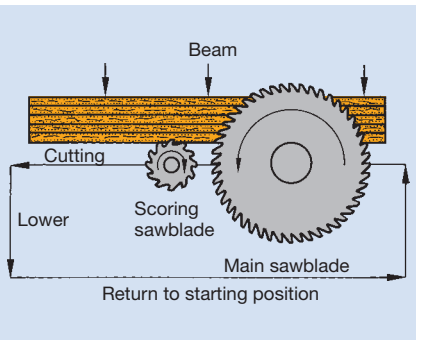

Panel sizing machine with scoring unit and pressure equipment

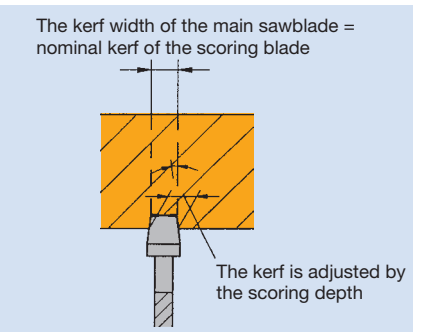

Application scheme of a conical scoring sawblade. Servicing the tools (always in sets), the cutting widthes have to be machted to each other.

A basic prerequisite to achieve cut surfaces without scoring is a good axial saw run-out but also low vibration. For this, the sawblades are pre tensioned by roll rings so they run stead even when subject to centrifugal forces. Additionally inserted laser ornaments and applied films absorb vibration and at the same time reduce noise. The biggest effect is achieved with foil laminated saws. The noise reduction here is up to 10 dB(A), a noise reduction of half.

Special thin cut saws were developed for separating high quality wood, e.g. when manufacturing parqueting blocks. Depending on the diameter, the cutting width is within a range of 1.0 mm to 1.6 mm. The teeth protude little laterally compared to the saw plate. Their application makes special demands on the woods‘ drying and the workpiece guidance in the machine, in particular the separated segments.

Ideally, circular sawblades should be sharpened on face and top to maximise tool life. For this reason the saw plate must be relieved at the back. As the teeth becoming smaller, the cutting quality improves since the protrusion of the teeth becomes smaller and the tooth vibrates less. However, the gullet also becomes smaller which is why the feed speed must be adjusted.

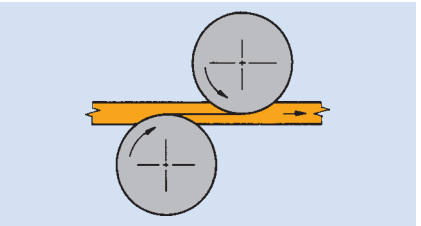

Double-hogging

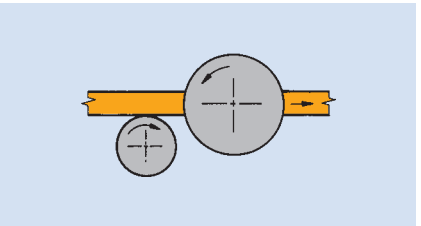

Scoring/hogging



Compact hogger
Example: Diamaster DT



Sawblade hogger

In many countries circular sawblades are resharpened only at the face due to sharpening machine limitations. To remove the wear zone, a significantly more sharpening than when sharpening on face and top is required. So, the sawblade may not be resharpened as often.

Hoggers
Hogger means tools that are processing the narrow sides of panel materials with their frontal cutting edges. They are face plain cutters and are used to format panels in through feed machines. To achieve cutting edges without tears you need two tools. There are two different types: „double hogging“ and „scoring/hogging”.

In case of **„double hogging“** a tool cuts with the feed both at the top and bottom of the panel, overlapping in the panel centre. Both tools are aligned accurately at one level and produce a smooth cutting area which may be edged later.

In case of **„scoring/hogging“** the underside of the panel is scored 1 to 2 mm deep (depending on the decorative coating’s thickness) by a scoring hogger with feed and subsequently finished by a hogger from the top against the feed. To avoid edges tearing at the hogger’s blades exiting the wood, the hogger is angled by 0.1 to 0.2 mm axially so that a small step appears on the cutting surface.

In addition to processing narrow edges, the hoggers also have to completely hog the material overhang. For this, the circumference must have a certain hogging width, between 5 to 10 mm for most applications. Regarding the tool design, a distinction is made between „compact hoggers” and „saw hoggers”. In case of compact hoggers all edges are mounted on a basic tool body. Usually diamond tipped tools. In case of saw hoggers a sawblade is screwed to the basic body process the narrow edge while flange-mounted cutters or saw segments hog the remaining material overhang. Usually diamond cutters are used for the sawblade while in most cases tungsten carbide knives are sufficient remove the material overhang.



Depending on the type of decorative coating, a distinction is made between different profile types of the hogger knives, such as e.g. radius or bevel knives or knives with a one sided tip. In recent years, a step profile has been developed (e.g. Leitz Diameter DT), significantly lowering the risk of damage to the knife from foreign matter in the chipboard. There are special shredder knives for processing veneered boards, breaking up the free veneer overhang so that the extraction is not blocked by veneer strips.



Cutter spindle „CentroStar“

Cutter spindles

Cutter spindles are tools permanently installed in the machine. They are found mainly in thicknessing and planing machines. They are composite tools with knife replacement always in the machine to reduce down time and ease work on the machine, centrifugal force clamping systems automatically clamp and position the knives when the spindle is run up (e.g. Leitz CentroFix).
Spiral cutter spindles with smooth knives have proven to be particularly quiet. However, such technique can only be used for HS steel knives and not tungsten carbide.

Planing tools

Planing tools are peripheral cutting tools with continuous straight knives. Usually they are designed as planerheads. They are used for smooth surfaces, primarily in processing solid wood. HL, HS and tungsten carbide knives are used as cutting material. The number of blades is between Z = 2 and Z = 36. The cutting width ranges up to a few hundred millimeters.
For precutting, planing tools with segmented edges (HeliPlan) or with ripple profile **(VariPlanPlus/RipTec)** are advantageous. They reduce the presplitting and prevent the wood from an early damage, so that considerably more even surfaces are produced during the enclosed finish planing.

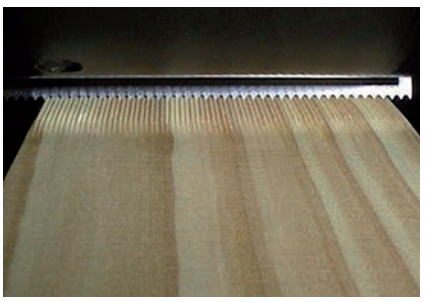

RipTec - preplaning tool

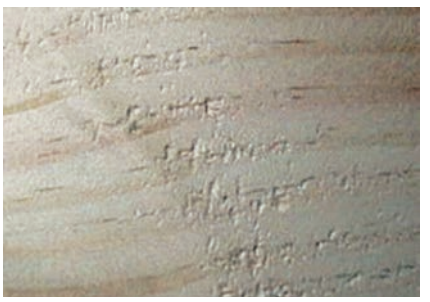

Finish planed surface after conventional preplaning.



Finish planed surface after preplaning with RipTec.

Conventional planerheads have two or four knives and are connected to the machine spindle via a drilling fit. Due to tolerance one knife is decisive for the surface. The feed rates achieved range from 9 to 36 m min^{-1}, depending on RPM. and required surface quality. Planerheads for higher feed rates have a hydraulic clamping or a HSK interface to guarantee a centering of the tool with the machine spindle free of play. For the hydraulic clamping grease-filled chambers in the wall of the tool are pressurized by a grease gun. By expanding the tool chambers, the bore shrinks, and the tool is locked on the spindle. In case of the HSK interface the centring is made by a positive taper lock axially pulled and positioned against a locating face.



Preplaning tool „HeliPlan“ with HSK

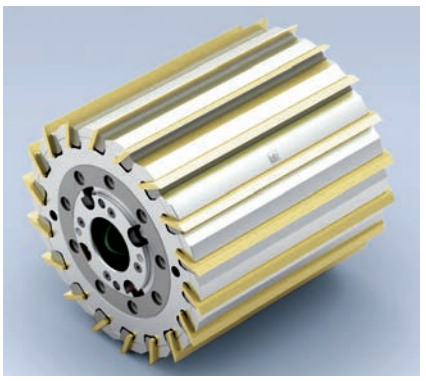

High performance planerhead „TurboPlan“

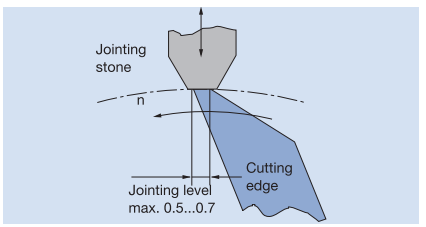

Jointing of a planerhead

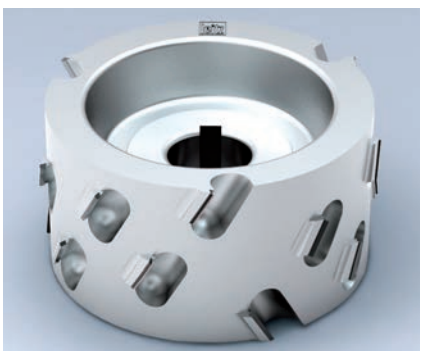

DP jointing cutter

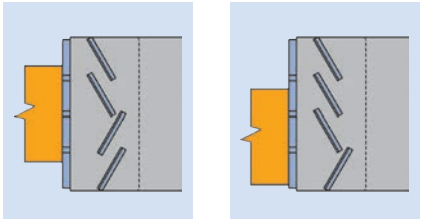

Symmetrical/asymmetrical edge arrangement

By centring a high balancing quality and best possible true knife running is achieved by truing the knives in the machine, **„jointing”**. After jointing, all knives have the same cutting circle and are equally responsible for the surface finish. Feed rates of over 400 m/min are possible.

There are other differences in the way of knife clamping. It is becoming more common for conventional planerheads to use cutting edge systems (e.g. CentroStar or VariPlan) enabling a swift replacement of knives with minimum setup, the hydro planerheads predominantly use systems with planing knives that can be adjusted and resharpened, (e.g. Leitz RotaPlan). There are also tool systems that drastically reduce the high setup effort when replacing the knives. Those include, among others, the Leitz system „TurboPlan” in which all knives are positioned by a positive fit and are clamped simultaneously by hydraulic clamping.

Jointing, grooving and rebating tools

Like planing tools, **jointing tools** cut on the periphery; however, the cutting width is significantly smaller and usually under 100 mm. Jointing tools are designed as turnblade tools or milling tools and are used predominantly in panel processing. The cutting material ranges from tungsten carbide to polycrystalline diamond for industrial use. To protect the edges of the workpiece from tear outs during processing, the knives have shear angles for an angled cut usually the surface. There are **symmetrical and asymmetrical tool designs**. Asymmetrical means that the lower knife row is aligned upwards and all knife rows above it are aligned downwards. These tools are set up with the lower row of knives aligned with the bottom of the workpiece and can process variable workpiece thicknesses within their cutting width in this position. If the angles of the knife rows are aligned symmetrically to the tool’s midplane, the tool must always be aligned with the workpiece centre. When changing the thickness of a workpiece, the tool position must also be adjusted. The advantage of the symmetrical design is that the jointing knives have a slightly convex design and thereby generate a defined concave cut of a few hundredth millimetres on the workpiece. This guarantees a tight glued joint on edge banding machines.

In addition to the peripheral knives, **grooving and rebating tools** have lateral knives, e.g. spurs, or the knives’ sides have a clearance angle. On both sides for grooving tools, on one side for rebating tools. For grooving tools, there are two different types: one part tools (similar to circular sawblades) and two-part adjustable tools for variable groove widths and for correcting the cutting width after sharpening.



Grooving cutterhead, width adjustable



Multi purpose cutterhead „VariForm“



Multi-part ProFix tool set for window profiles



Panel raising tool

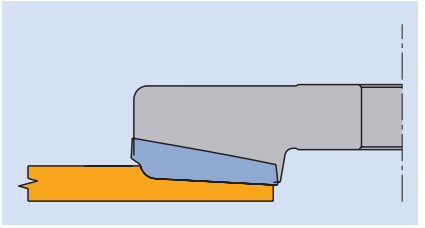

Profile tool systems
Profiles range from simple profiles like bevels or radii to decorative profiles to highly complex jointing profiles, such as finger jointing, slot and tenon or counter profiles. Its application is a common across wood processing field. The range of cutting materials is extensive, from HL steel to polycrystalline diamond (DP). The tool types range from solid cutters to brazed tools and profile cutterheads to constant profile tools that can be resharpened.

Multi purpose cutterheads play a special role. Knives moulded in any way may be inserted in a tool body. The blanks may be profiled by a sharpening service or by the user, enabling a quick production of the required plus low tool costs for small production volumes.

For profiles, a distinction must be made between one-sided or open profiles and closed profiles with radial profile shoulders on both sides. While one clearance angle on the profile is sufficient for one-sided or open profiles, the knives must have two clearance angles on the sides for closed profiles. This has consequences in the tool design: such profile cutters must be designed in two parts so that profile changes resulting from resharpening can be compensated. However, turnblade tools that are not resharpened can be designed in one part.

To enable great profile depth it is of advantage to assemble tool sets from several different individual tools of varying diameter. Hence you can use smaller discs and achieve higher speeds. Additionally, the cut distribution can be better adjusted to the workpiece and profile. A classic example is window tools.

Panel raising tools are a special form of profile tools with profile knives arranged on the face of the tool. They are used to profile the infill panel for doors. Due to the small setting angle κ_r they produce a surface almost without any plane knocks.

Shank tools
Principle, these are the same tool types as for jointing, folding, bevelling, panel raising and profiling cutters but with shank as for drills; they only have a smaller diameter and can be used for higher speeds.

The **routers** are a special case. Usually they have a high **slenderness ratio**, e.g. they are much longer than they are wide. They are mounted in a chuck by their shaft, and the cutting part is outside the chuck. So, the tool is subject to a high bending stress and the breakage due to overstress is high. This is the reason why the **cutter marks f_z** are also significantly smaller than for drilling tools. They are less oriented towards hogging relevant values such as the mean cutting depth h_m but towards the tool's load capacity. This depends on the unsupported length and diameter. This is why, for example, the admissible feed rates for splitting or grooving are usually lower than for jointing.



Spiral finishing router in solid tungsten carbide

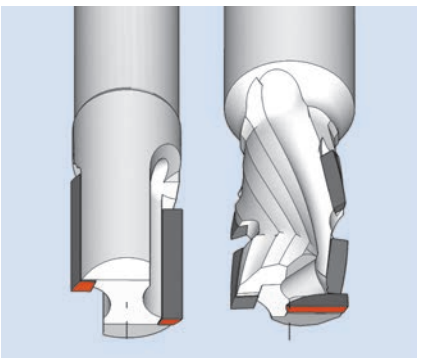

DP router
left: cutting in end grain
right: plunging tip

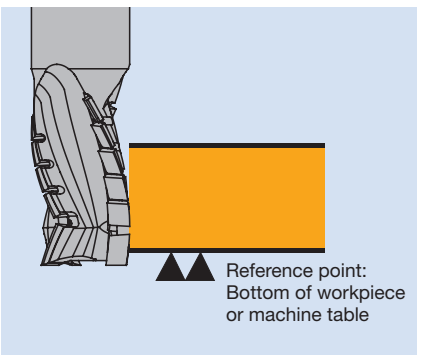

DP-shank cutter with mainly negative twist

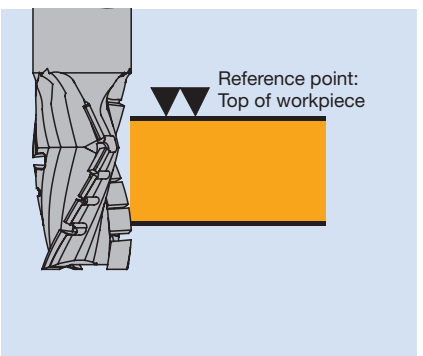

DP-shank cutter with mainly positive twist

Important design features for routers are the design of the knives and the helix or shear angle. The tool is suitable for axial drilling when it has a basic knife extending to the central axis and if it is designed with a positive helix angle. **Axial drilling** should only be the exception for quality and tool stationary time reasons. It is more gentle for the tool to enter the material by **helical drilling or ramping in** at angle. In such case the requirement for the tool is only a knife front clearance angle, usually the case for routers.

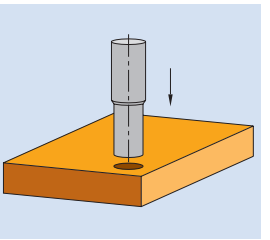

Axial plunging

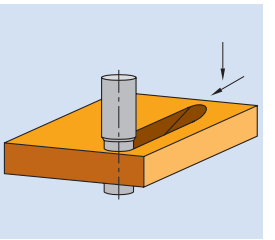

Plunging

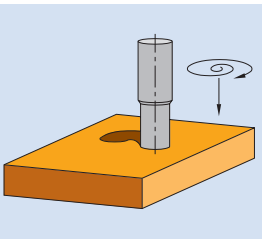

Spiral shaped plunging

The **helical angle** plays another role. An upward positive helical angle favours swarf removal towards the extraction hood and prevents tears on the lower cutting edge (workpiece side at the bottom). A downward negative helical angle applies pressure to the workpiece, supports the workpiece and prevents the upper cutting edge from tearing (workpiece side on top). Routers used for sizing coated panels material have both negative twist in the upper knife and positive twist in the lower area. Hence, top and bottom of the panels are processed without any tear outs. If the proportion with negative twist prevails, the tool can process varying panel thicknesses with the same length set up. If the proportion with positive twist prevails, the dust collection is improved significantly; however, the tool must be adjusted to the relevant board thickness in its axial position.

It is normal for routers that their milling part may be programmed at will. If this results in unfavourable machining situations such as cutting contrary to the fibre direction or exiting the workpiece against the feed, the turning direction must be changed. For this reason most routers have **left hand rotation** in addition to the usual **right hand rotation.**

Tungsten carbide (HW) in solid, tipped, or turnblade or **polycrystalline diamond (DP)** are used as cutting materials. Tungsten carbide tools can be produced with continuous knives and are suited to solid wood processing as finishing tools. Diamond tipped routers always have segmented knives and are mostly used for coated chipboard and fibre materials. It may be that turnblade routers are inferior to solid or tipped tools regarding their feed rates but, their use is justified in cases when constant diameters are important or where it is not possible to sharpen the tools.

For fast roughing (hogging) routers have a **roughing profile**; a wavy profile that is slightly set off at each knife breaks up the chip, and the cutting force is reduced allowing higher speed rates. Special designs with a cascaded profile, the individual steps in total create a straight line, allow hogging processing almost to finish quality. This is the roughing finishing router.



Turnblade shank router



Roughing-finishing router of solid tungsten carbide



Through hole boring bit



Dowel drill

In the aim for more flexible manufacturing with smaller batch sizes, separating boards with router cutters (example: Nesting) is competing against circular saws more and more. Nesting requires small tool diameters of 10 to 12 mm and high feed rates of 20 to 30 m min^{-1}. This makes high demands on the tool stiffness and why tungsten carbide tools are used predominately for **Nesting**.

Resharpening of tungsten carbide routers is usually on the cutting face, however, for diamond-tipped routers it is at the edge.

Drills

In principle, drills differ from routers as the knives are only at the end; the periphery is ground circular. They only produce holes with a fixed given diameter. The feed movement is axial.

A distinction is made between drills for through holes, e.g. for screws, and those for blind holes, e.g. for plugs or fittings. Through hole drills have a slim tip to produce entrance exits without tear outs by its scalloped cut. Typical features of drills for blind holes (e.g. plugs or for fittings) are spurs to avoid tear outs at the drilled edge when penetrating the panel, flutes to produce a smooth side, and a centring tip so that the drill is centred when drilling. Ideally, the spurs are formed in a way to apply pressure to the workpiece surface when penetrating and create a pulling cut. Both wood fibres and decorative coatings are cut cleanly before the flutes clear the inside of the drilled hole. Usually the diameter of the flute is reduced by a few decimillimeter right behind the drill tip to reduce friction between drill and drill hole and to help chip removal.

Essentially, drills for solid wood and board material differ with regard to cutting material, helical angle and length. Solid wood drills are manufactured from HS steel or tungsten carbide while it is mainly tungsten carbide and occasionally polycrystalline diamond that is used in drills for panel processing. Since the helical angle is the cutting angle for the drill separating the wood fibre requires a „destructive" cutting edge, solid wood drills have higher helical angles than drills for panel material. The required drilling depths are greater for solid wood applications than for panel material, and the drills are longer. For very deep holes, single edged „Levin drills" are used because their gullet aids chip removal. To avoid the chip choking and creating high frictional heat it may be necessary to clear the cutting space by withdrawing the drill for a short time.

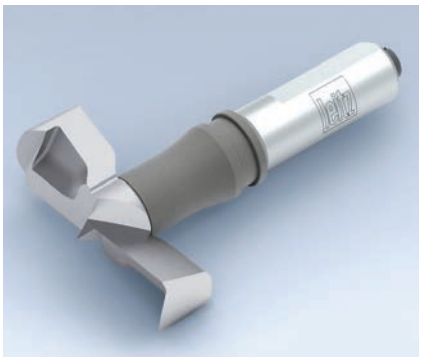

Hinge boring bit



Levin drill

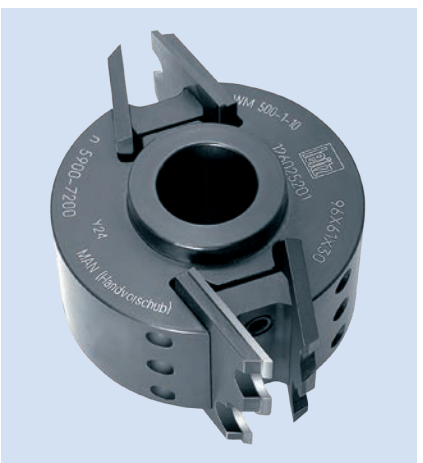

Multi purpose profile cutterhead for manual feed with limitors

When using drills in drilling units and drilling aggregates, a constant length is important so the drilling depth always remains unchanged. Drills have a screw for adjusting the length at the end of the shank to set the drill length in advance so new and resharpened drills always have the same length. Most drill aggregates have different spindle rotations for design reasons. That is why there are drills rotating left hand and right hand. To reduce the danger of confusion, the two rotations are marked with different colours; drills rotating left hand usually are marked with a red colour, right hand black.

Cutting tools for manual feed
Cutting tools for manual feed must be designed with kickback limitation. They are subject to limitations regarding number of teeth, knife protrusion and gullet. The tool body must either be circular or equipped with limiters restricting the knife protrusion and the cutting gap width.

The design details vary with type of tool and are regulated in the European standard EN 847-1 „Machine-tools for the woodworking industry safety demands”. Cutting tools authorised for manual feed are marked „MAN” on the tool.



Arbor with detachable spindle/hub connection

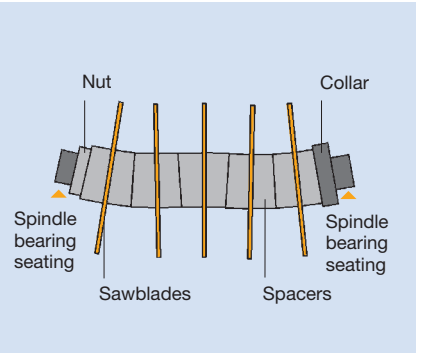

Tools on a spindle axially clamped against each other

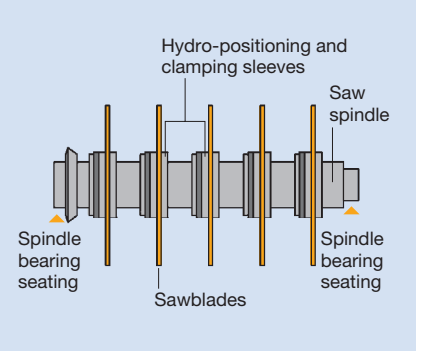

Hydraulically clamped tools an a spindle not depending on each other

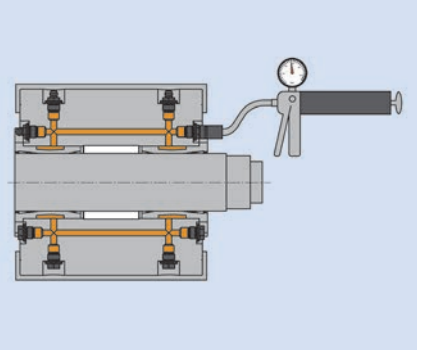

Hydro clamping technology, open system

Tool clamping systems are the interface between tool and machine. They have an adaptor on the tool side and a mounting sleeve on the machine side. The tasks of the tool clamping system falls under three heading categories:

- **Torque transmission**
  The cutting forces must be received with sufficient safety, the tool must not spin.

- **Centring**
  The better a tool is centred on the machine spindle, the better the concentricity and balance quality.

- **Replacing tools**
  The tooling times are shortened by easy and fast tool replacement. Automated tool replacement is required for flexible production.

The simplest form of tool clamping is a shank/hub connection. The tool is centred by means of a defined clearance **fit between tool bore and machine spindle**. Positive fit elements such as feather keys or drive pins transmit the torque. They are clamped by nuts at the shank end. Examples are drilling tools or flanged bushes for motor spindles with splined shank or cylindrical spindles of planing and finger jointing machines. This type of tool clamping has two important disadvantages:

1. The tools are not centred free of play. The centre of gravity is offset by the tolerance, with a negative effect on concentricity and balance quality.
2. If several tools are clamped side by side or on top of each other, the axial run out tolerance of the bodies increases. If the body faces are not parallel. When applying axial tension at the end of the shank, the spindle may bend resulting in an increased imbalance and loading to the bearings.

Tool clamping systems that centering free of play were developed to eliminate such disadvantages. One example is **hydro tools** or **hydro clamping elements**. This clamping method consists of a ring chamber around the bore filled with grease or oil. When pressure rises in the chamber, the thin wall concentrically distorts towards the bore. The tolerance becomes zero, and the tool is clamped to the shank. The tools are clamped individually to the shank, there are no clamping forces, and the shank is not bent. Open and closed systems are defined by how the pressure is introduced.

Open systems are filled with grease. The pressure is increased by means of a grease gun. To release the pressure, grease is let out by a bleed screw. Such systems usually can be found in the moulding, planing heads and profile tools. The required pressure of approximately 300 bar is adjusted by the volume of grease pressurised. The system can be used in a wide range of temperatures, important for planing mills.

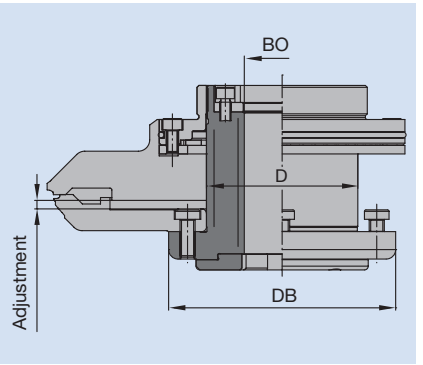

Hydro-Duo clamping element with two independent chambers for adjustable tool sets

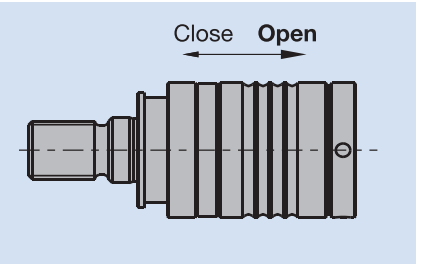

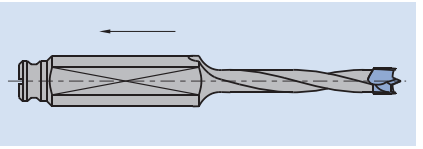

Drill quick clamping system



Tool set with HSK adaptor for automatic tool change

Closed systems are filled with grease or oil. Pressure is built up and released by an internal piston. The pressure is limited by the piston displacement and varies with temperature. Such systems are preferred where workpiece cleanliness is essential, e.g. in furniture, window or floor manufacturing.

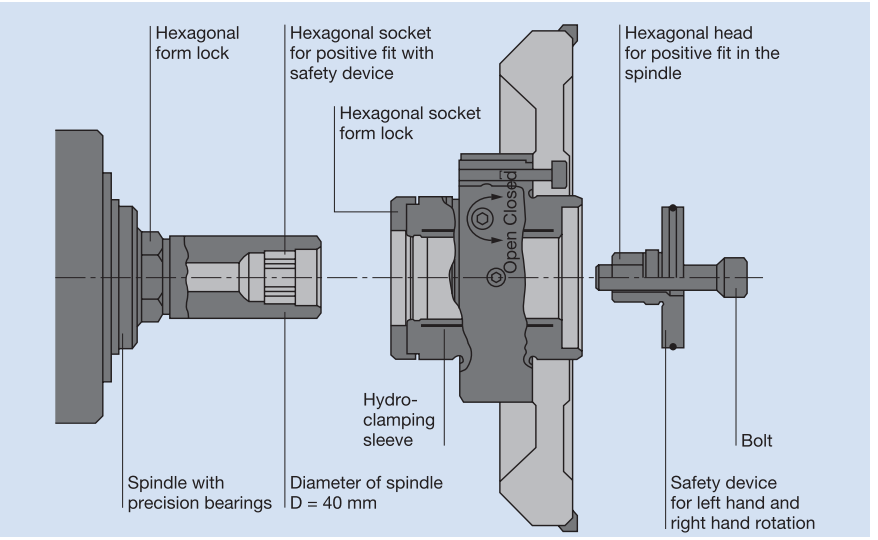

Hydro-clamping element, closed system

Hydro clamping elements usually are designed as **„Hydro-Duo clamping elements"** with bi-directionally to center the tool on the clamping element and the clamping element on the shank. Such Hydro-Duo clamping elements are ideal for adjustable two-part slot and tenon tools. When the pressure is released in the outer chamber, a tool part may be moved axially. During the subsequent build up of pressure the tool is centered and clamped again in its new position

As a safety measure against losing pressure, hydro clamping systems additionally are secured mechanically by locking mechanical collars as safety devices against twisting.

To shorten the tooling times for replacing the tools, **quick change systems** were developed for mounting on the machine shank and have a mounting tool flange clamped and loosened in seconds. Examples for this are bayonet mount systems for drilling tools that are operated mechanically or pneumatically or quick change systems that are operated totally tool free, similar to a hose coupling. Despite significantly reduced tooling down time these systems still require a manual intervention in the processing procedure.

Taper mounting sleeves between tool and machine were developed for **automated tool replacement**. Initially they were quick release tapers such as SK 40 or SK 30 but today **HSK interfaces** have expanded globally in wood processing. While initially developed for CNC processing centres, they have arrived in the through feed machine sector, in double end tenoners or planning/profiling machines. The HSK interface incorporates the advantages of both hydro and quick connect clamping systems: precision and speed.



Hydro-strain clamping chuck



Collet chuck



Shrink-fit chuck ThermoGrip®

Ideally the HSK is designed in one part with the tool. So, the tool diameters can be reduced and speed can be increased. However, in most cases it is not possible for structural or economic reasons. This is why there are HSK adapters that are screwed to the tool. Hydro clamping systems are used again, for a removable and tool centring connection. A distinction is made between hydraulic chucks for drilling tools or multi-part tool sets in which the clamping mandrel is hydraulically opened out, and **hydro clamping chucks** for clamping shank tools.

Collet chucks are a universal clamping system for shank tools. By using exchangeable collets, any shank diameter up to 25 mm may be clamped. The multitude of parts and wear on the collet result in moderate values of concentricity and balance quality. Tool excentricity may be up to 0.06 mm. High spindle speeds result in the nut being opened with a loss of clamping force. Consequently, high-quality collet chucks have balanced clamping nuts with an internal ball bearing to produce a higher preliminary tension. On the machine side, the collet chucks are designed with a HSK or taper interface.

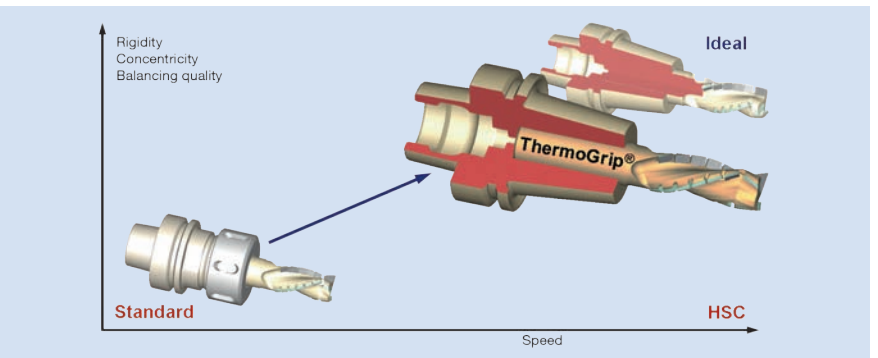

Shrink-fit chucks „ThermoGrip®“ were developed for high performance processing. They create a virtual monolithic connection between tool and chuck. The chuck principle is based on thermal expansion and functions without mechanically moved parts. To insert the tool shank, the clamping part of the chuck is heated. The chuck bore is manufactured undersize expands, receives the tool shank and shrinks while cooling. This way, tool and chuck are connected to each other as one piece. The chuck is heated by induction by special high frequency generators. The chuck's heat expansion is faster than that of the tool so that the tools may be shrunk out again. Shrinking chucks „ThermoGrip®“ may be used at speeds up to n = 36,000 min^{-1}, and due to their stiffness enable 30 % higher feed rates compared to collet chucks even in the conventional speed range up to n = 24,000 min^{-1}.

The same technique of shrinking on tools is also used for arbors for tool sets. It makes sense if the tool remains on the arbor for sharpening or changing knives. A higher balancing quality is achieved by the shrink fit connection since tools and arbor can be balanced as a unit, and the tool weight may be reduced by using light alloy tools. Both result in a considerable increase in the feed speed which increases productivity on stand alone machines, for example in window manufacturing with the wide tool sets usual in this industry.

Highest precision regarding concentric and axial run out and balancing quality is achieved if the tool is sharpened with the clamping system as a unit. This requires universal tool interfaces on the wood processing machines in production and the tool sharpening machines in service. Tools conditioned in this way may be operated at higher feed speeds and have a longer tool life.

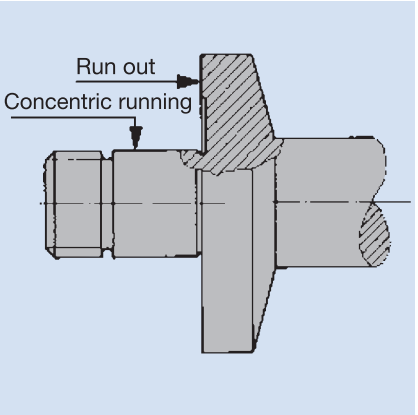

Concentricity and run out

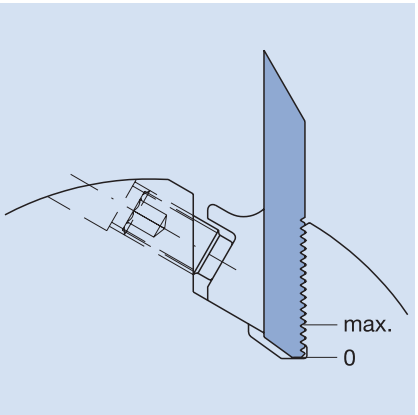

Note the readjustment area

1. Measures before commissioning

When installing a tool on the machine, please check the following points:

a) Please read the instructions before commissioning the tool.

b) Clean the tool and the tool adaptor.
All mating surfaces, the knife seating, the interfaces between machine spindle and tool adaptor, must be free from dirt, grease and corrosion.

c) Clamp tools only between the intended clamping areas in the machine. Clamping areas, such as bore, boss, conical surfaces and knife seatings must not be damaged during assembly.

d) The blades must not come into contact with machine parts during assembly – risk of breakage!

e) Check tools for chipped or damaged blades – in particular if the tool has collided with machine parts, such as machine table, tool clamping elements, extraction hoods. Do not use tools that have been deformed. Have damaged tools checked by an expert. Sets containing damaged or worn cutting edges, clamping elements or screws must be replaced with original parts. Tools with a damaged tool body or deformed knife seating must be removed. Repair of such tools is forbidden!

f) When assembling tool sets, use face ground spacers.

g) Tighten all clamping screws with the correct key. The torque specified in the operating instructions must be observed. Using of extensions or hammers not permitted.

h) Check tool tension and feed rate.

i) Check the correct direction of rotation of the tool.

j) Compare the maximum rotational speed (n_{max}) of the tool with the rotational speed of the machine. The value (n_{max}) as stated on the tool must not be exceeded. The rotational speed ideal for the application may be below n_{max}.

2. Measures to be adopted/care during use

Special care is required to maintain the quality and precision of a tool throughout its life. The following points are important for professional handling of the tools:

a) To prevent corrosion, protect wood processing tools from humidity. If not in use for a long period, the tools should be treated with a suitable care product, such as WD-40 or Ballistol.

b) Protect cutting edges and clamping surfaces from damage. For example, store and transport the tools in their packaging and do not place them on hard surfaces.

Tool wear and cutter condition should be checked during use to confirm the tool is serviceable, and to avoid unnecessary expense. Do not in any circumstances wait until cutter wear (blunting) has become too great or sections of the cutting edge have broken away. On many machines, checking the power consumption with an ammeter is an easy way to monitor the condition of the tool.

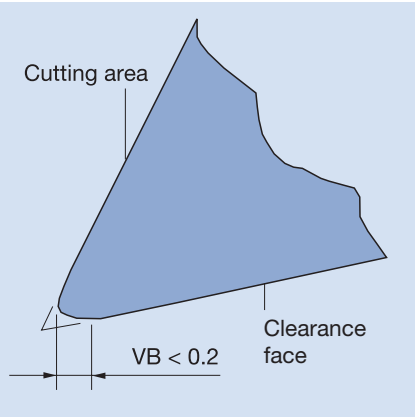

Maximum width of wear mark VB.

Cutting generates dust particles which, when mixed with resin or adhesive, can build up on the cutters or in the tool gullets. Such build up reduces the cutting angle, the size of the gullets, increases the power requirement, it shortens the tool life, reduces the surface quality and can, in extreme cases, even burn out motors.

Cleaning tools is not a luxury but an essential part of their use. Tools should be regularly cleaned of resin; special commercial cleaning agents are available. For tools with aluminium bodies, use only commercial cleaning agents with a pH value of between 4.5 and 8, as corrosion can destroy the alloy. Attention: Always comply with the manufacturer's instructions.

Frequent removal of any resin build up is especially important with tungsten carbide sawblades, as even small cutter projections have this problem. In some cases resin build up can lead to cracks in the sawblades.

Particles of workpiece material can damage the cutters if dust and chips are not extracted efficiently. The cutting edges can be chipped, as well as increased abrasive wear.

An extraction system with optimised extraction capacity and performance will help increase tool life.

Regular maintenance is essential for proper and safe use of tools.

Tools must be resharpened when:
a) workpiece surface quality is no longer satisfactory
b) the wear mark width (VB) on the clearance face is greater than 0.2 mm
c) the machine's power consumption is too high
d) sections of the cutting edge have broken away.

3. Tool servicing/Sharpening
This means reinstating the cutter sharpness of blunt tools, but also other repairs, for example replacing damaged cutting edges.

Servicing differs for the various materials, namely tipped high alloy tool steel, tungsten carbide or diamond.

Special machining processes are necessary to minimise the temperature rise in the cutters during sharpening to ensure crack free cutting edges, a cutting geometry according to the drawing, maintenance of the original dimensions and tolerances and a sharp cutting edge.

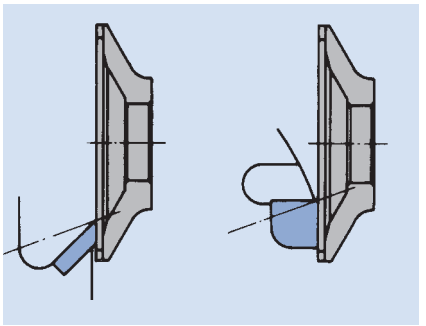

Sharpening on the clearance face.

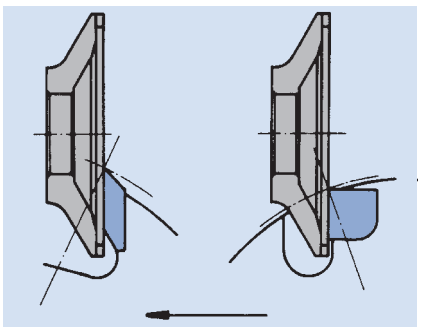

Sharpening on the cutting area.

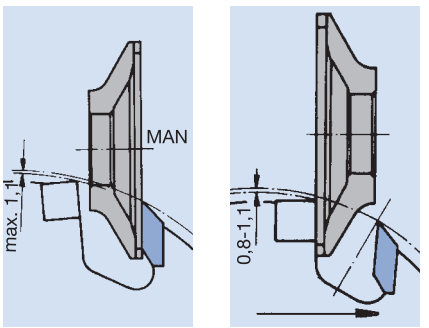

MAN tools: Knife protrusion
in comparison to the limitors.

When servicing tools, the following has to be observed:
– the construction of composite tools must not be altered
– tipped tools must be serviced by trained personnel
– only spare parts to the manufacturer's original parts specification are used
– tolerances to ensure precise clamping, are retained.

To avoid damaging the cutting material by overheating or stress cracking, cooling lubricants must be used when sharpening.
Attention: Dry sharpening is not recommended.
The specified tool body radius should not be changed when sharpening, to avoid the risk of fatigue stresses.

3.1. HL, HS, ST and HW tools (solid or tipped)

HW tools are sharpened with diamond grinding wheels. Corundum or CBN grinding wheels are used for all the other cutting materials listed above.

Basic rules
– clean the tools thoroughly before sharpening
– maintain concentricity tolerances – check with a dial gauge
– spur projection beyond main cutter: 0.3 to 0.5 mm
– cutting edge projection should not exceed 1.1 mm above the limiter on manual feed tools

Tools with radial tipping

a) Grooving cutter with or without spur

These tools are always sharpened on the top, so as not to change the cutting width.

b) Jointing, rebating and bevelling cutter blocks

These tools are sharpened parallel to the face of the cutting edge or the spur.

c) Profile cutterblocks

The shape of the tips depends on factors such as the cutting material, profile depth etc. The clearance face can be one of three types (concave, straight, or convex), depending on the purpose of the tool. Sharpening always takes place on the face of the cutter, not on the profile!

Profile cutterblocks with straight or concave clearance face are sharpened parallel to the face; profile cutterblocks with convex back relief are sharpened by rotating around the cutter axis. The maximum permissible cutting edge projection for manual feed profile cutterblocks (MAN) is 1.1 mm and must not be exceeded.

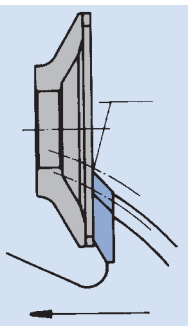

Straight clearance face.

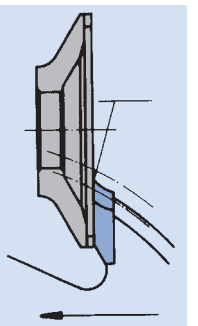

Concave clearance face.

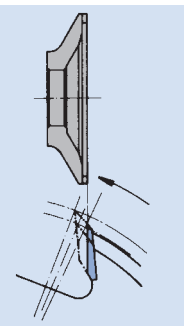

Convex clearance face.

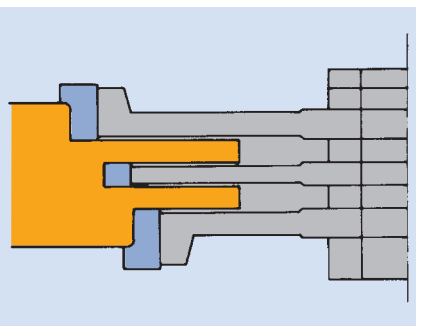

Slot and tenon cutter.

3.2. HS and HW slot and tenon cutters

The special blade tip geometry ensures constant rebate depths if the same amount is ground away from the face of every tip and removed parallel to the tip. For manual feed tools, the maximum permissible cutting edge projection of 1.1 mm must not be exceeded. After several sharpenings, the shimming must be adjusted (with a spacer set) to maintain the profile.

3.3. Cutterblocks and cutter sets

Single tools are sharpened as stated in guidelines 1 and 2 above. The amount removed during sharpening depends on the most worn cutter. All cutterblocks in a cutterset have to be sharpened to the same diameter to maintain the original workpiece profile.

3.4. Diamond tipped tools (DP)

Diamond tipped tools can only be sharpened or eroded on the top, using machines with special fixtures. Sharpening can be either by grinding or by spark erosion. Special measuring equipment is needed to check the sharpened tool. Diamond tipped tools can only be serviced at Leitz service centres with the necessary special equipment, or at the Leitz production plants.

3.5. HW tipped circular sawblades

a) General information

HW tipped circular sawblades should only be sharpened on special purpose automatic sharpening machines. Manual sharpening on universal sharpening machines cannot be recommended for quality and cost reasons. Automatic sharpening machines use a plunge cut grinding principle and are designed for wet grinding. Many of these machines are capable of sharpening all the standard and special tooth forms in a single cycle on both the face and the top. Sawblades must be thoroughly cleaned before sharpening.

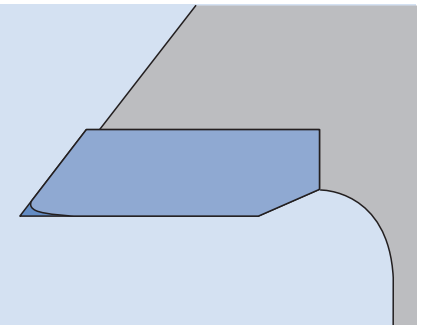

Wear on a HW saw tooth.

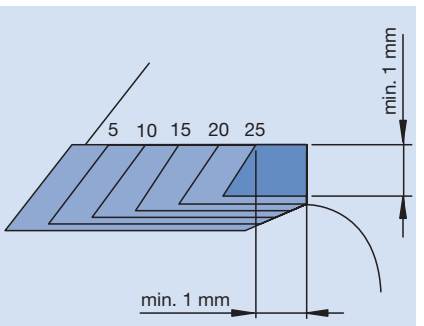

Leitz recommendation for the remaining tooth size on the sawblade.

b) Reduction of saw plate and body

Only the tungsten carbide tips should be ground by the diamond wheel on automatic sharpening machines; the saw plate must be reduced behind the teeth and if necessary in the chip gullet as a separate operation. To avoid reducing the stability of the teeth unnecessarily, the HW tips should not project more than 0.2 mm (with SB < 3.2 mm) or 0.5 mm (with SB > 3.2 mm) above the saw body.

c) Resharpening

To sharpen a circular sawblade the maximum number of times, it is essential to sharpen both the face and the top of HW circular sawblades. As a rule, the removal ratio between the top and the face is 1:1 for solid wood machining and 1:2 for chipboard. Failure to remove the rounded-off areas at the tip edge completely reduces the tool life. The sharpening machine instruction manual will contain the necessary machine settings. Adjustment to the thickness of the sawblade is especially important, as teeth sharpened inaccurately will cause lateral sawblade runout.

d) Residual tooth height and thickness at end of life

When the tooth height measured from the tip seat is 1 mm, the sawblade is at the end of its life and should be scrapped for safety reasons.

e) Retipping

All Leitz service centres offer a replacement service for individual damaged teeth on HW sawblades. The new tip is applied by induction brazing using the correct braze and flux.
Expert knowledge of both the carbide composition and the saw body material is necessary. Users are recommended not to carry out this work themselves.

f) Flattening and tensioning

Flattening a sawblade means eliminating any twists in the plate for perfect flatness. Tensioning means stretching the saw plate at a point roughly halfway between the periphery and the centre. Flattening and tensioning are usually carried out as a single operation, and are essential for satisfactory sawblade performance. Sawblades should be checked regularly during resharpening for flatness and tension, and corrected if necessary. This is essential for multi-rip and thin-kerf sawblades, as these work in extreme conditions and can easily crack or fracture as a result. Sawblades severely discoloured by overheating should be discarded.

When in use, a sawblade should be supported by the correct flange; the flange diameter is based on the diameter of the sawblade. This relationship is laid down in German Industrial Standard DIN 8083. As a guide, the flange diameter should not be less than a quarter but preferably a third of the sawblade diameter.

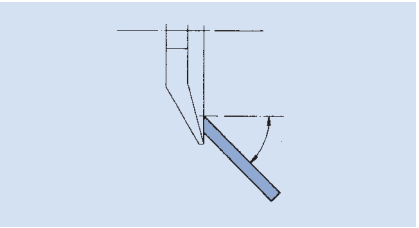

Sharpening of planer knives.

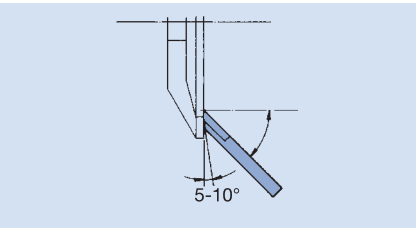

Recessing of the knife basic material of HW-tipped planer knives.

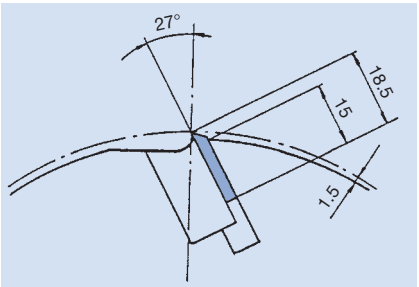

Planerhead
Cutting angle 27°

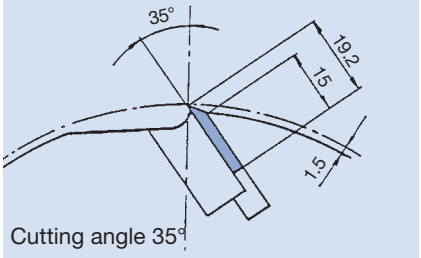

Cutting angle 35°

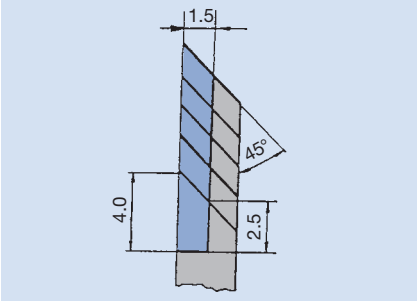

HW-tipped planer knives

Allowed minimum dimensions of planer knives.

3.6. Hoggers

a) Hogging cutters

Hoggers consist of a sawblade and a hogging cutter screwed together. Hogging cutters must be ground on the top of the teeth and occasionally on the face, so that the relationship between them and the sawblade is maintained. As the teeth are of equal pitch, it is more efficient if they are sharpened on an automatic machine. The hogging cutter has to be mounted on a special fixture for this operation.

b) Segment hoggers

Segment hoggers consist of hogging segments and a sawblade. The saw segment can be ground either while mounted in the hogger body on a conventional cutter sharpening machine, or dismantled from the hogger body and mounted in a special fixture for an automatic sharpening machine (as used for HW circular sawblades).

c) Compact hoggers

A diamond compact hogger (DP) is sharpened by erosion on all three edges (side, bevel and top), on a special machine. If the tool is mounted on a hydro sleeve during operation, sharpening must be carried out with the same level of clamping to achieve high concentricity and runout accuracy.

3.7. Cutterheads

It is essential to follow the below when mounting planer knives:

1) All the tool body locating faces, knives and clamping elements must be clean and undamaged.
2) The clamping screws should be tightened from the centre to the outside (for larger cutting widths).
3) The knife setting should be checked with either a dial gauge or a setting gauge (for planer knives).
4) Do not use an extension to the wrench or key when tightening the bolts or screws.
5) Spurs should sit perfectly in their seats before the screws are tightened.
6) Cutterheads should be mounted on a suitable spindle when tightening the bolts or screws, to avoid distorting the body.
7) Seats and wedges in cutterheads must not be modified in any way as they are specifically designed for maximum safety.
8) All knives and clamping elements should be of equal weight.
9) New knives and clamping elements mounted in opposed seats should have the identical weight to avoid imbalance.

a) Planer knives

HL, HS and HW planer knives are ground only on the back to maintain the original angle. To prevent the diamond wheel from touching the tool body when resharpening the knives, the clearance from the steel backing must be 5 to 10° less than for the actual carbide tip.

Comply with the dimensional tolerances when sharpening planer knives. The minimum clamping width should not be exceeded (see the marks on the side of the tool body).

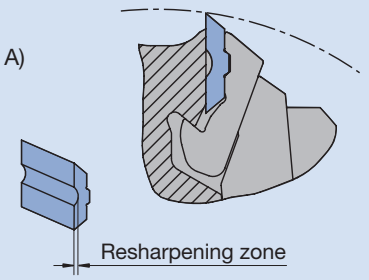

Tungsten carbide turnblade knives in new condition

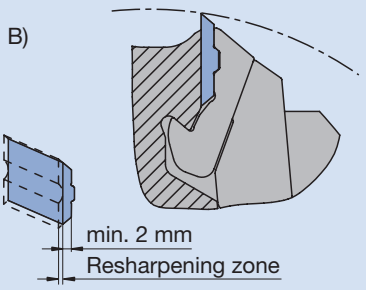

...resharpened down to the remaining thickness

Sharpening of VariPlan knives.

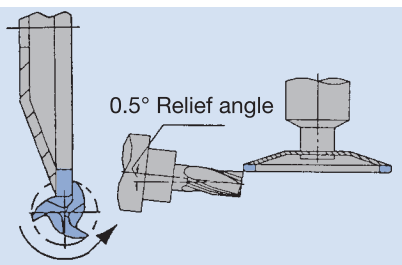

Infleed through twisting by the tool axis

Sharpening of spiral routers.

For a minimum clamping width of 15 mm and a radial knife projection of 1.5 mm, the minimum knife height is 18.5 mm for a cutting angle of 27° and 19.2 mm for a cutting angle of 35°.
Hydro cutterheads have a radial knife projection of 4 mm; for the same minimum clamping width, the minimum knife height is 21.3 mm.

Note, the minimum tip height must be at least 4 mm on HW tipped planer knives.

b) VariPlan planerhead
The cutter has straight, face-sharpened turnblade knives which can be sharpened. The knives have a raised trapezoidal area on the back and are mounted in a special fixture for sharpening.

The resharpening area of 1 mm is shown by the groove in the knife face. The clearance angle is matched to the clamping mechanism in such a way that after resharpening, the diameter of the tool remains constant and the clearance angle must not be changed.

c) Spiral planerhead
Sharpening the 1 mm thick flexible HS knives requires a special fixture supplied by the manufacturer. After sharpening, the knives are clamped in the cassette to the correct three-dimensional pattern. The user can then install the complete knife cassette in the spiral planerhead.

d) Profiled knives
Profiled knives are ground on the edge of the profile; the possible sharpening area and minimum knife clamping heights must be complied with.

The cutting edge quality and the life time can be improved, if one level is ground with a second clearance face, which is about 3° to 5° smaller than the main clearance face. Radial profile sectors additionally require a lateral clearance face.

3.8. Tools for routing
a) HS and HW spiral routers
These tools are manufactured in one of two designs: either as a finishing cutter with maximum chip removal of 1 to 3 mm, or as a roughing cutter for high hogging performance.

Roughing cutters are resharpened only on the face because of their special profile. Finishing cutters can also be resharpened on the clearance face.

b) HS and HW routers with shear angle
These are face ground. If the cutting edge is chipped, the back can also be ground down to the next possible nominal diameter. The body must be set back at least 0.7 mm from the knife cutting circle.

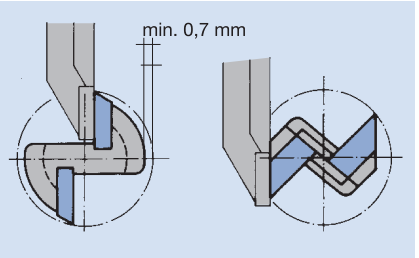

Sharpening of routers with straight edges.

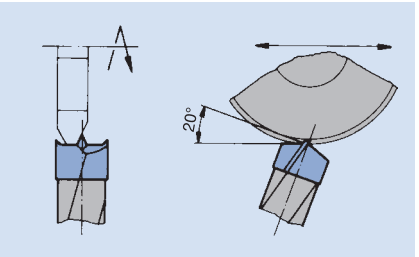

Sharpening of dowel drills.

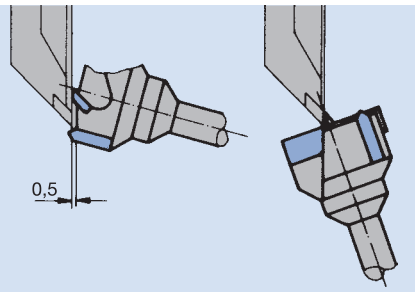

Sharpening of hinge boring bits.

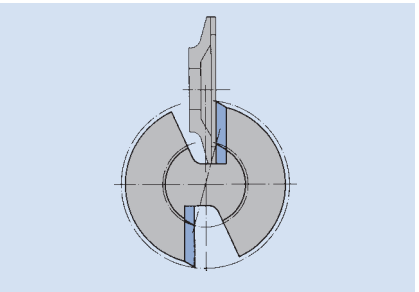

Sharpening of HW-tipped profile routers.

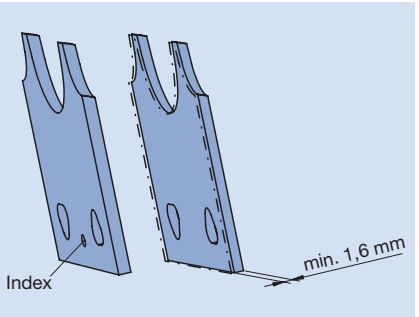

Sharpening of VariForm knives.

c) HW tipped dowel drills

Clamp the drill firmly in a collet before resharpening, to ensure high concentric running accuracy. HW tipped dowel drills are resharpened on the cutter edge, centre point and spur in one operation with a profiled diamond wheel. The projection of the centre point and spurs above the tool body must be maintained. Profile diamond grinding wheels are available for all frequently used diameters.

d) HW tipped hinge boring bits

Clamp the tool firmly in a collet before resharpening. The centre point and spurs are ground in a single operation. Before sharpening the edges of the main cutters, the tool body must be set back so that it is 0.5 mm below the main cutter. The spur should project above the main cutter by 0.3 to 0.5 mm; the centre point should project by 1.5 to 2.5 mm. If there is excessive wear, the main cutter can also be sharpened on the face, but only resharpened as far back as the centre of the bit.

e) HW tipped profile router cutters

Profile router cutters are subject to the same sharpening guidelines as profile cutterblocks (see 3.1c). Profiled routers are clamped firmly in a collet before resharpening to maintain high concentric running accuracy. The restricted gullet geometry of MAN tools may require the use of thin, small diameter grinding wheels.

3.9. ProFix knives

HS and HW tipped ProFix knives are sharpened on the face after removal from the tool body and mounting in a pivoting fixture fitted to the table of the sharpening machine. This allows knives with different cutting angles (15°, 20°, 25°) to be aligned parallel to the sharpening direction. HW tips can be ground down to a minimum thickness of 0.5 mm, ensuring a high material utilisation.

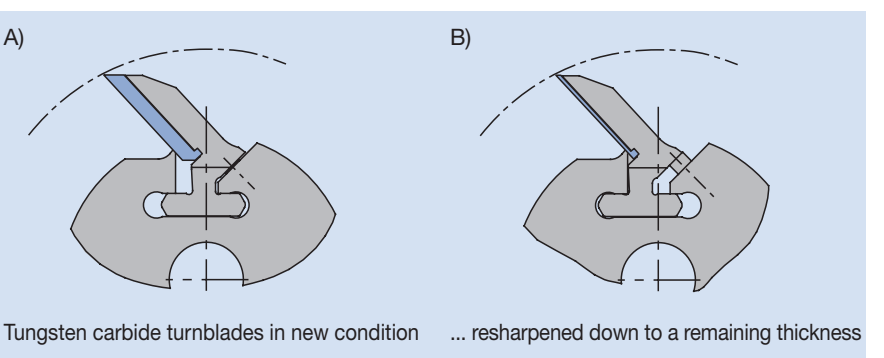

Tungsten carbide turnblades in new condition ... resharpened down to a remaining thickness

Sharpening of ProFix knives

3.10. VariForm profile knives

VariForm cutterheads (HW) are ground parallel with a diamond wheel over the entire front face of the knife (the cutting face).

Special grinding machine fixtures are required; these are installed at Leitz service centres.
The sharpening area is identified by a circular hole in the cutting face. Once this hole has disappeared, the knife has reached the end of its useful Index life and cannot be resharpened any thinner (minimum thickness 1.6 mm).

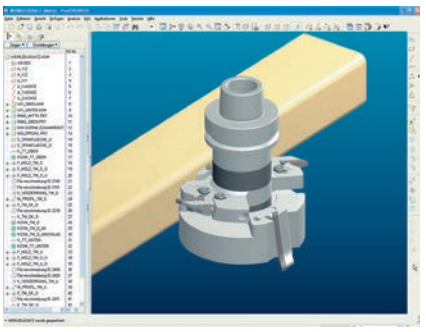

Modern construction methods through 3D-CAD.

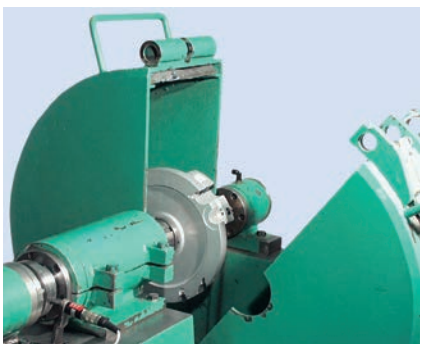

Centrifugation test facility.



Labelling example of boring tools.



Labelling example of shank routers with a minimum clamping length.



Tool with integrated data chip.

Tools for woodworking machines are potentially dangerous because of their high speeds and sharp cutting edges. Always use machine guards and only use tools tested for compliance with the technical safety requirements to reduce the risk of accidents.

Safety at Leitz

The highest level of product safety is important to Leitz as a major tool manufacturer. All Leitz tools are designed and manufactured to EN 847 standards and take the latest safety research findings into consideration. The basis for safe tools is established at an early stage in their development, as can be seen from:

- modern CAD techniques and calculation methods such as the Finite Element Method (FEM)
- extensive testing including overspeed and reversing tests in the Leitz research department
- tool certification according to the independent industrial accident tests laid down by the Deutsche Holz-Berufsgenosssenschaft (German Wood Trade Industrial Accident Insurers).

Manufacturing procedures checked and documented to DIN EN ISO 9001 and a certified quality management system guarantee the high quality and safety standards expected of tools supplied by Leitz. Support from Leitz – including local Leitz sharpening centres satisfy customers' needs and advice from technical specialists – ensures the safety of the tool throughout its life.

Safety in use

A tool is only as safe as how it is used by the operator. Detailed, easily understandable instructions on the safe use of the tools are just as important as their safe design. Leitz cooperated in the VDMA project to develop specimen instruction handbooks for different types of tools. These layouts are now used not only for Leitz products but are also recommended by the European woodworking industry association EUMABOIS.

Users are given the relevant safe handling information by the information etched on the tools, the maximum rotating speed, method of feed, minimal clamping length for shank tools etc.

Intelligent tools with integrated memory chips are available for CNC machining centres. These tools automatically supply the machine control system with the relevant geometry and technology data such as tool length, tool diameter, recommended running speed, direction of rotation etc. The risk of manual input errors is reduced ensuring high operating safety and process reliability.
The comprehensive safety instructions supplied by the machine manufacturer should be followed when using tools. The guards on the machine are to protect people and should not be modified or removed. Internationally accepted pictograms advise of any potential danger.





ISO 3864, U.S. ANSI Z535
VDMA woodworking machines.



Safety labels
Pictograms for handling, function monitoring and maintenance - woodworking machines

Important Note:
Tools and clamping tools are not subject to machine guidelines and are no allowed to have the CE-Sign.

Safety guidelines
Leitz and the other well-known German tool and machine manufacturers are members of the Association of German Machine Manufacturers (VDMA). Leitz's long experience has contributed to national and international standards and regulations for the safe construction of woodworking machine tools and for operator safety throughout the world.

The EN 847 series of European standards, parts 1 to 3 „Machine tools for woodworking – safety requirements" are the most important guideline for European tool manufacturers. Woodworking tools must comply to these minimum standards to be considered safe.

One of the aims of manual feed tools is to reduce kick back. The small gullet size and limited cutter edge projection reduce the severity of injuries. This is evident by the steady reduction in the number of accidents notified annually to the industrial accident insurers.

EN 847-1	Machine tools for woodworking – safety requirements Part 1: Milling and planing tools, circular sawblades
EN 847-2	Machine tools for woodworking – safety requirements Part 2: Requirements for shank milling tools
EN 847-3	Machine tools for woodworking – safety requirements Part 3: Clamping tools



Constant decrease of the „new" accident benefit (source: Holz BG)

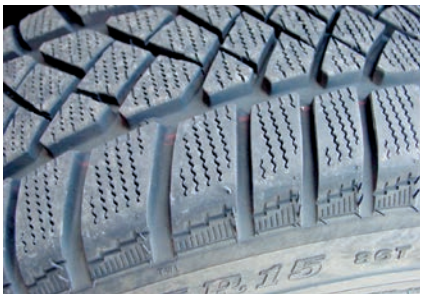

Tire profile with irregular pitch.



UT-hogger with irregular pitch.



A) Conventional jointing cutter
91,5 dB(A).



B) Jointing cutter „WhisperCut“
86 dB(A).

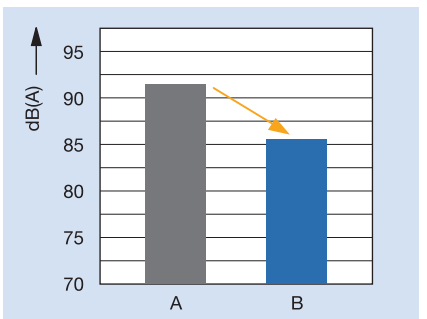

Noise reduction for jointing cutters.

In addition to dust, noise is a major problem in the woodworking industry. It is important when developing new tools to reduce noise levels at source and to prevent them from increasing. If the level is lowered by 10 dB(A), the human ear perceives this as a 50% reduction in noise. The latest low noise tool systems considerably improve the users' working environment.

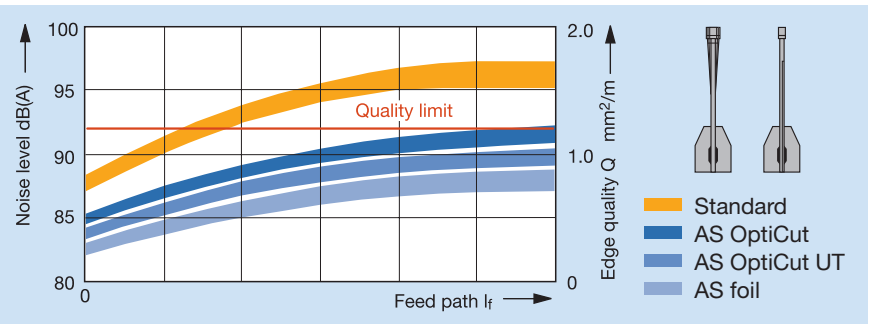

Axial body vibration of a plate type tool such as a sawblade causes noise radiation. The vibration amplitude can be significantly reduced by the design of the teeth, gullet geometry and by damping the saw plate. Leitz supplies a choice of designs of low noise sawblades (AS) which take into account all the criteria, the machine and the materials to be cut.

A) AS sawblade with foil (vibration damping by friction between sawblade and foil)
B) AS OptiCut UT sawblade (irregular pitched teeth supress harmonic vibrations in the sawblade)
C) AS OptiCut sawblade (laser ornaments in the sawblade body reduce natural resonance and vibration disturbing the sound waves).

Cutting edge airflow turbulence is another cause of noise as it stimulates vibration in the sawblade. When the cutting tips touch the workpiece, tool and workpiece vibrate. Varying the distance between successive cutting tips counteracts harmonic vibrations and dampens both free running and cutting noise.

The principle of irregularly pitched teeth (UT) is applied to both sawblades and profiling tools.

Research has also been carried out on ways to reduce the noise generated by cutting tools. A closed circular tool body shape, a profile that matches the tool body and optimised gullet geometry result in significant noise reduction. Today's diamond jointing tools with these features generate half the noise of their predecessors. But there are other, fully intentional, benefits from noise reduction. Reduced vibration means that the tool runs more smoothly, in turn leading to better cut quality and a longer tool life.



Laminate processing: Typical chip collection in the machine.

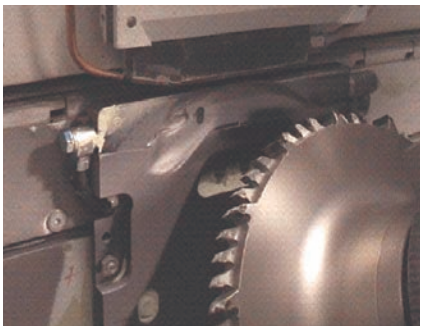

Problem: Machine wear through abrasive chips.

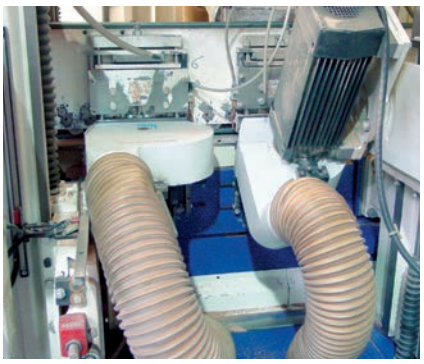

Every woodworking production process causes chips, chips to be extracted. Despite state of the art extraction systems, not all the chips are collected. Whether processing solid wood or panels, uncollected chips have a negative impact on added value. They reduce the product quality, make additional tool cleaning necessary, increase machine downtime and can cause machine breakdowns through wear. Leitz's answer to this problem is DFC® (Dust Flow Control).

DFC®

The philosophy behind DFC® is to control the chips by using the kinetic energy in the chip flow to direct the chips away from the workpiece and tool cutting edge into the extraction system.

This improved method of chip collection has the following advantages:

– Energy saving
  The extraction airflow no longer has to capture the chips, only transport the chips into the extraction system. This reduces the required airflow volume and, in winter, reduces heating costs, as the heated air is not being taken from the factory.

– Improved product quality
  Sensing systems are not impaired in any way by chip imparing them or glue spillage.

– Higher productivity
  Clean machines mean continuous production without stoppages.
  Clean workpieces do not need additional cleaning prior to packaging.

– Reduced servicing costs
  The abrasive chips are directed away from expensive machine elements and dispel their energy against replaceable wear parts such as guides or dust hoods.

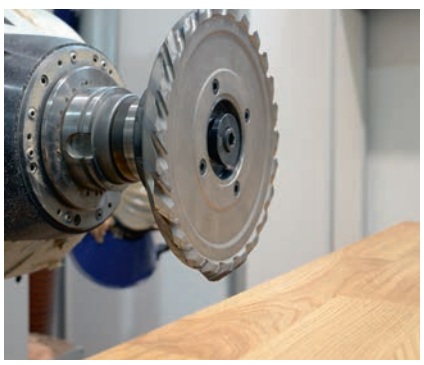

DFC® tool for directed chip beam. **DFC®-system:** Tool with adapted extraction hood. Most of the chips are collected and the wear is kept away from the machine.

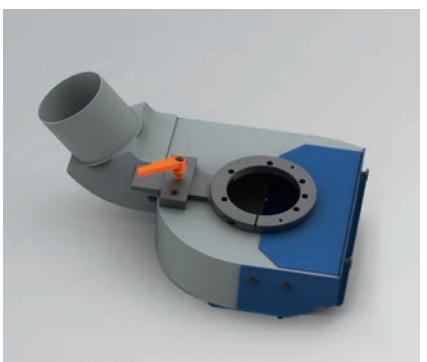

Module-based DFC® extraction hood with exchangeable wear baffle plates, adjustable tool passage with secondary air supply system and detachable lid for good accessibility to the tool.



A sound-insulated design can additionally optimize the machine with regard to noise.



Example: Hogging of veneered panels with free veneer projection.



Broken splinters block the extraction hood - fire risk through friction of the rotating tool!

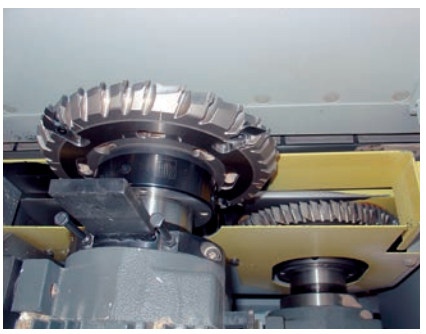

DFC® hogger with shredding edges shred the veneer projection on an extractable size for a complete disposal.

Applications for DFC® tools:
DFC® technology is available for hoggers, jointing cutters, profile cutters, grooving and shank tools; it is the subject of ongoing continuous development. The best results are achieved when the tool and the extraction system are matched to each other. Examples of DFC® system solutions are:

– i-system

  Developed with the machinery manufacturers for efficient chip collection on edge banding machines – over 95% efficient.

– DFC® tools for laminate and parquet flooring production with matched extraction hoods, e.g. „i-flooring": significant reduce wear caused by abrasive chips to the machine guides and feed systems.

DFC® tools are important in hogging; the problem of continuous high volume chip output cannot be solved simply by increasing the extraction velocity. The chips must be directed as produced in the right direction. The effect cannot be seen so easily as on CNC machining centres when sizing panel materials. Often compromises have to be made in the design of the tool, the working method and chip flow.

Chips can clog the extraction hood and a fire risk from friction with the rotating tool. Chips can also block the extraction pipes and stop production. A well known example is machining veneered panels where the coating projects over the edge of the panel. Conventional tools do not break up the weak projecting coating causing the long strips of veneer to clog the extraction system. Such blockages can cause machine fires. DFC® hoggers with shredder knives solve the problem by breaking the overhang into small, easily extracted pieces.



Splitting of worktops with DP-routers. Conventional router: Chip beam horizontally leaves the workpiece and shoots through bristle curtains or vertical blinds.

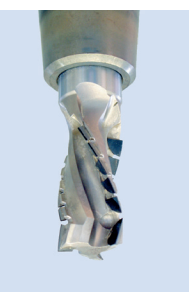



DFC® router: Chip beam is directed to the top of the extraction hood and can be extraced.

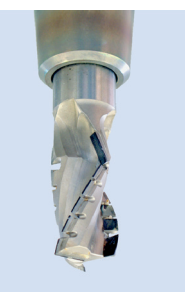



Tool with QR Code


Tool with DataMatrix Code


Tool with integrated RFID Chip


Tool with integrated NFC Chip

In the early 1990s, Leitz introduced the wood processing market to chip tools as „intelligent tools", storing all a CNC tool machines' relevant data on integrated memory chips. This provided the machine control center with essential geometry and technology data including RPM, direction of rotation, diameter, tool length, reference points coordinates, and if the application was known, even the recommended application speed and feed speed.

The machine transferred all this data in the tool memory device, which had the benefit of needing no calibration, reading the data straight into the machine controls. This improved process safety by preventing errors during adjustment of the machine. However, an issue was the lack of standardization of data; the tool needed to be programmed on a machine-specific basis and could not be used on machines from different manufacturers.

With the rise of digital-controlled manufacturing, cyber physical communication between all operating resources has become increasingly important. For this, tool data is stored in a central database. It is encoded with an automatically readable and unambiguous identification-number: RFID Chips or DataMatrix Codes. Access to the data takes place via this serial number. For manufacturing tool data exchange, a crucial prerequisite is a standardized data model with uniform nomenclature and uniform structure of parameters. The tool acts as knowledge mediator and consequently becomes the key factor for the optimization of the entire production processes and value chains.

The advantage of central data management is that much more information can be transferred; data can be retrieved at any time without physical access on the tool. Not only can tool data be read into the machine control but also machine data like tool life and power consumption can be assigned and written back to the individual tool. In this way a learning system is made possible that anticipates a tool replacement. Pure parameters used by the machine control as well as tool contour data can be transferred to the control unit in order to carry out process simulation and collision detection. By linking tool data with material data and application data, an expert system can be created that recommends the right tool with appropriate parameters to the customer for their machining task.

At the highest stage of networking, tool data is provided from the cloud. Access to the data can be assigned to different authorization groups or user groups. Each tool has its individual valid data record which can be updated by the Sharpening Service if tool parameters have changed as a result of resharpening or rework. Tool-related tool life data can be transferred to the tool manufacturer providing the basis for optimizing processes and for pay-per-use billing models.
Imaginable is also a hybrid type between data storage on memory chip and a cloud solution, depends on the existing IT improvement and IT firewall concepts. Here the tool is data medium for necessary safety and performance data and at once other additional information as application parameters, running time parameters or CAD data can be viewed in the cloud.

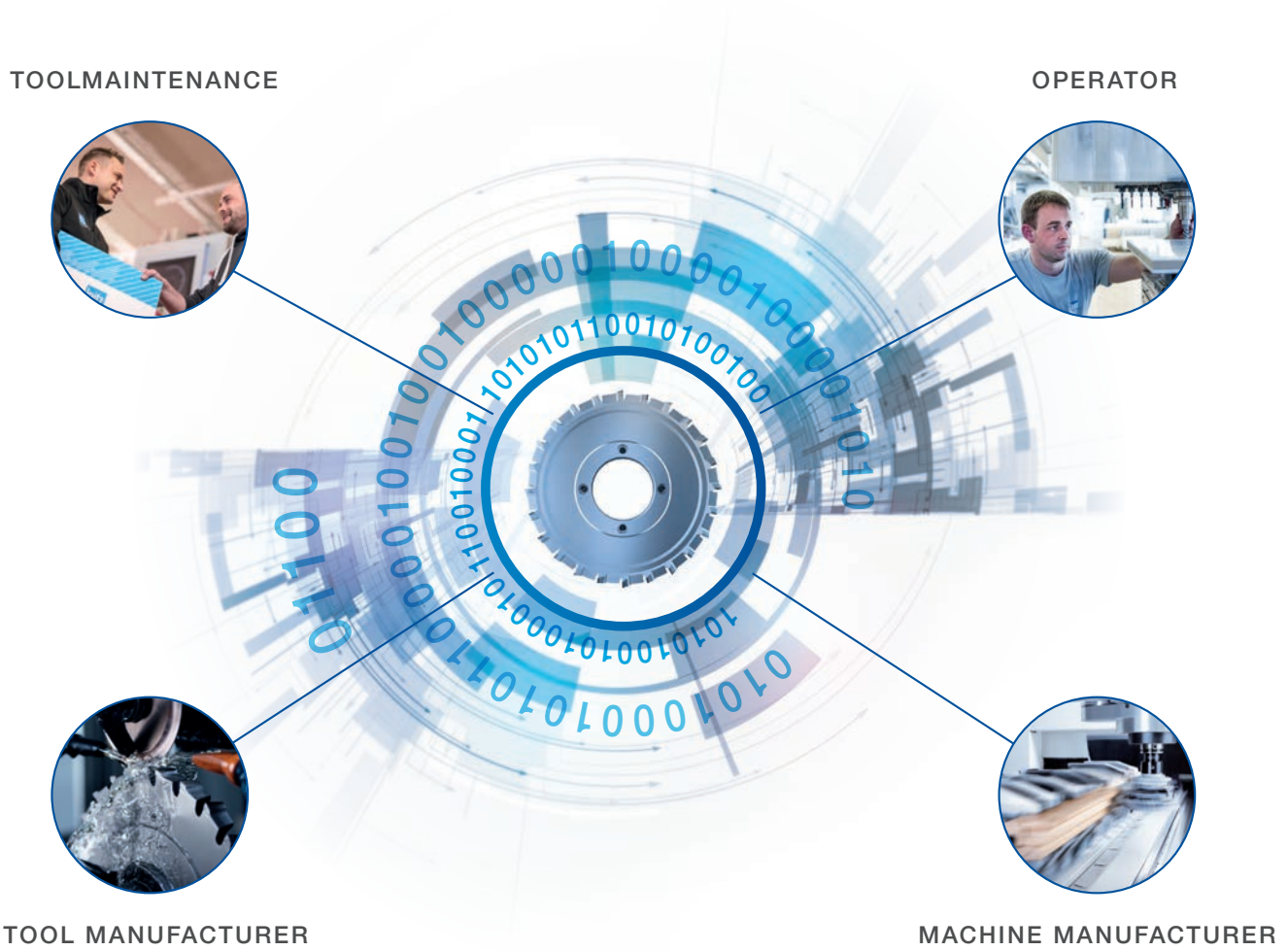

There are two different categories of wood processing machines with mechanical feed: through feed and stand alone machines.



Detailed view of an edge banding machine with chain feed.

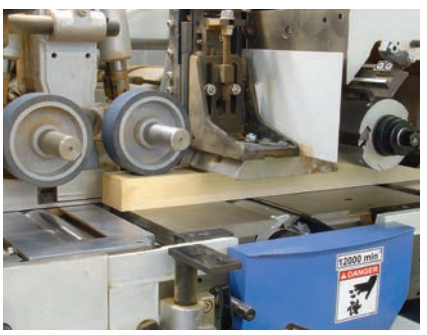

Detailed view of a four side planing and profiling machine with roller feed.

If the workpiece is guided through the machine by a feeding unit, it is called a **through feed machine**. The machining processing is made by guiding the workpiece past the tools. Several tools may be used subsequently, to fully process the workpiece. Depending on the type of feeding systems, a distinction is made between machines with chain feed and machines with roller feed.

Machines with chain feed are used to process the narrow sides of panel materials. The feed chain is used as the workpiece support and reference height for the process. A revolving top pressure belt clamps the workpieces to the chain and transports them through the machine. The part of the board workpieces protruding past the chain can be processed. The chain's uncoiling movement from the chain wheel, can cause minor variations in the feed; this is called the polygon effect. Such effect is counteracted structurally so that the polygon effect does not affect the processing quality. Typical examples for such machines are double end tenoners and edge banding machines for furniture components or machines for profiling laminate panels or parquet floor panels.

Machines with roller feed are used for four sided processing of solid wood or wood derived products. Typical examples of this machine category are multi spindle four side planing and profiling machines for manufacture of blanks, mouldings and profile panels. The workpieces are pushed along the machine table by driven feed rollers and guided along a fence. The roller feed, is smooth so the wood surfaces are ready for painting. It is also important for the processing quality that the workpieces are guided past the processing tools straight and without vibrations. The tools‘ zero diameter has to be set exactly to the table height and lateral guide in order to produce accurate workpiece surfaces. Constant tools save time since their zero diameter remains unchanged. Additionally sufficient support of the workpieces against the cutting pressure is important in order to avoid workpiece vibrations and rippled surfaces. The pressure shoes at each processing station must be set exactly to the workpiece dimensions. Chip extraction is also important.

Through feed machines enable a **high production performance** since all processing steps on one workpiece are made almost at once. These machines are designed for bigger batches since retooling is time consuming. Following the **trend towards smaller batch sizes**, elements from stand alone technology are now integrated into feed through machines: e.g. engines with HSK interface, preset tools, automatic tool changer, tracing aggregates, contour milling cutters or through feed drilling. To further increase the feed rates, dynamic linear actuators are used for the tracing aggregates.



Cantilever type machining centre

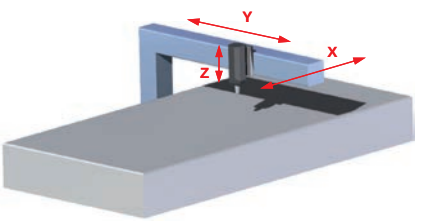

Schema of a cantilever machine

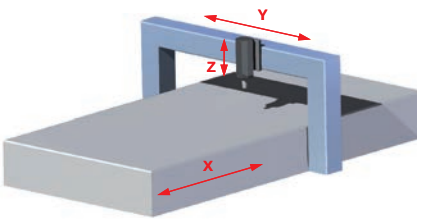

Schema of a portal machine

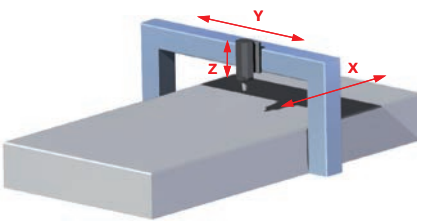

Schema of a gantry machine

In **stand alone machines** the workpiece is clamped firmly, and the feed movement is achieved by contour controlled axis or the workpiece table. Depending on the arrangement for the moving axis, the different designs are called travelling column, portal or gantry. In the **travelling column design**, also called **cantilever**, machine spindle is situated on a mobile cantilever and executes the feeding movements in all three axis. In case of the **portal design**, the machine spindle which is mobile in Y and Z direction is situated on a fixed portal, and the feeding movement in X direction is made by the workpiece table. Such machines often are equipped with tandem tables, so one table may be loaded and unloaded by a handling system while processing is under way on the second. The **gantry design** is a **travelling portal** carrying the machine spindle. All feeding movements are achieved by the tool, similar to the travelling column design. Due to the bilateral support of the travelling portal, the gantry machines are more dynamic than the cantilever machines and often used for the nesting.

Coming from point-to-point drills and CNC routing cutters, these stand alone machines have been developed into complex **processing centres**. When equipped with drill drives and additional aggregates, they can machine the workpiece, drill it on all sides, saw and even edge band so that a component may be processed in one setting. The machines are made flexible by a tool magazine and automatic tool changer. The main spindle is usually designed to use a HSK interface; HSK-F 63 and also HSK-E 63 are common in wood processing. Since the tool diameters range between 3 mm to over 200 mm, the motor spindles are frequency controlled to a maximum speed of 24,000 min^{-1} or up to 30,000 min^{-1} for HSC machines.

CNC-controlled machines allow flexible component manufacturing with a batch size of one. The software determines what process by which tools. The process task is changed by calling up a new CNC program on the control. Despite this theoretical flexibility, the component spectrum processed on one machine depends on the **workpiece clamping technology**. Beams may be positioned freely and with vacuum extraction clamps for panel workpieces or mechanical clamping devices, for window blanks, may be positioned. Additionally there are vacuum tables for clamping of bigger boards e.g. for nesting. Mouldings without level clamping surfaces, e.g. backrests, are clamped by specially manufactured templates that are set on the beams or vacuum tables mechanically or by vacuum as an auxiliary device. The arrangement and distance of the extraction or clamping devices on vacuum table are very important for the processing result. If the distance is too great, workpiece vibrating reduces the processing quality and tool life. Bigger pieces of waste should be clamped so they do not break off, damaging the tool.

Since all operating sequences on stand alone machines run one after the other the processing times are longer than on through feed machines. On the other hand, any shape can be produced, and the components are finished. To increase productivity various methods are employed. Each machining process is sped up by smaller tool diameters and higher spindle speeds. The movement dynamics are increased by employing linear actuators. By having multiple tools on one arbor, tool changing times are reduced by placing the tool in a different working position instead of replacing it. By using several independently controlled main spindles, operating sequences occurr in parallel. Moving workpiece clamping systems with part transfer enable a workpiece to be fed through the machine.

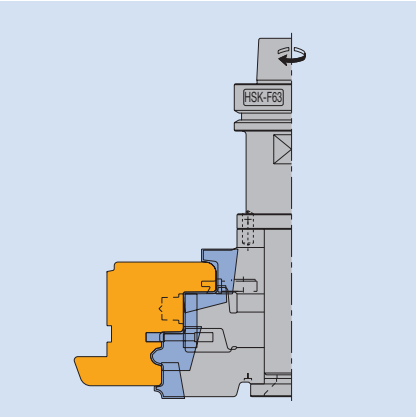

Rebating with a 3-axis machine

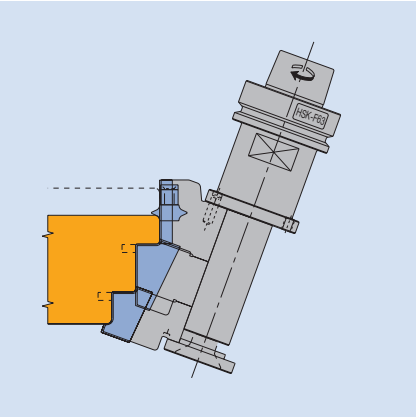

Rebating with swivelled spindle on a 5-axis machine

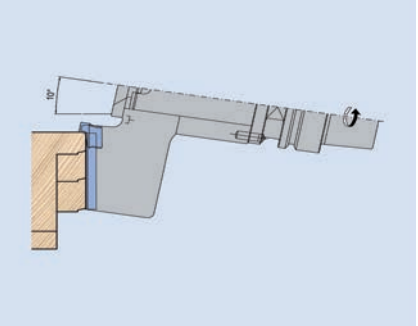

Taper-surface planing of visible surfaces, for example window profiles: No visible knife marks.

Another trend in stand alone technology are **5 axis machines**. For wood processing machines, the 4th and 5th axis are usually two additional spindle swivelling axis. There are two types: cartesian and gimbal 5 axis machines. Both systems have a vertical swivelling axis for the spindle as a 4th axis. In the cartesian system the motor spindle is rotatable around a horizontal axis in a „fork". In the gimbal system the spindle swivels around an axis by 45°.

A classic application for **5-axis machines** is processing 3D moulded parts, for example model making, mould making or boat building. However, this requires a CAD/CAM interface to program the control the five axis. In wood processing, the trend to utilise the 4th and 5th axis to swivel the main spindle is more widespread. It is possible to minimise the use of aggregates since bevels, saw cuts and holes can be made with standard tools on the main spindle. Additionally the quality of rebates can be increased by the same entry conditions at both sides of the rebate by using a inclined spindle. Tool life of double rebate profiles increased as the tool profile depth is reduced and the differences of cutting speed and operating path of the knives are decreased.

A special application is taper-surface planing, working with small adjustable angles on spindle. Efficient tool diameter can be reached through a big taper angle. This means no visible knife marks on the processed surface.

Manual feed machines are stand alone machines and the workpiece is usually fed by hand. The machine table is the supporting surface for the workpieces. The workpieces are guided past the tool by a sliding table of fence. Workpieces with shaped edges are guided by templates. Special tools with ball bearing guide rings are required. In principle, the same variety of workpieces as on machines with mechanical feed may be manufactured on machines with manual feed. Manual feed machines for one-off products or repair parts are essential in plants for industrial mass production.

Typical examples of stand alone machines with manual feed are **circular saw benches, surface planing machines** and **vertical moulding machines**. They can be equipped with mechanical feeding devices (power feed) in addition to the manual feed but still are considered manual feed machines.

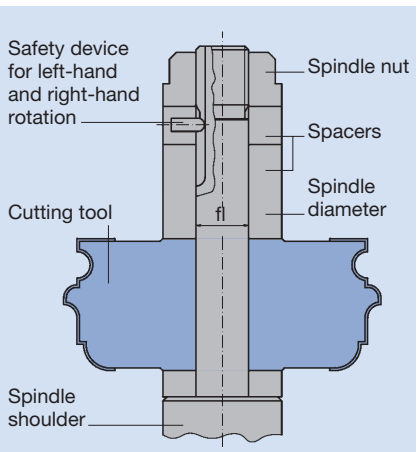

Example of a tool mounting on a spindle moulder.

The operator creates the feeding movement and is involved in the machining process and is exposed to a higher risk than machines with mechanical feed. The highest risk is the rotating tool since the cutting area is not enclosed. The machine directive for machines with manual feed stipulates numerous protective devices. Their use is stipulated in the national accident prevention regulations, their use is the user's responsibility. Protection against touching the rotating tool, preventing workpiece kickback and dust and noise are covered by the regulations. Extraction hoods have the function of a protective device and at the same time serve as noise protection.

Important safety requirements for working with manual feed machines:
Only tools marked with „MAN" designed with particular kickback limitations to EN 847-1 may be used (except for circular sawblades). The tool mounting on spindle moulders must be effected by a safety against twisting in order to prevent an accidental opening of the tool. The free spindle length has to be filled up with spacers, so that the clamping nut can transfer the clamping power to the tool. To prevent workpiece kickback you have to work against the feed (except for scoring). Short workpieces must be fed by a push stick to keep the hands as clear as possible of the hazard area. Openings between the tool and the machine table or lateral guides must be as small as possible. For stopped straight work stoppers for a defined pivot movement of the workpieces must be attached additionally. Circular sawblades must be operated with a riving knife adjusted to the sawblade diameter and the thickness of the saw kerf to prevent the sawblade jamming in the cut and the workpiece from being thorson back. For cutting edges without tears there are special scoring aggregates scoring the bottom of the workpiece to a cutting depth of approximately 1 mm with the feed before the separating cut is made with the main sawblade. The scoring sawblades create a cutting kerf about 0.1 to 0.2 mm wider than the main sawblade.

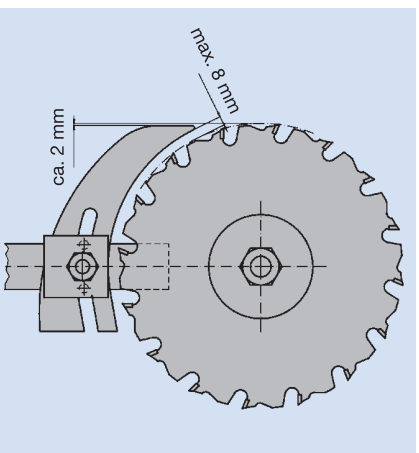

Correct adjustment of the riving knife on spindle moulders



Swing cover saw



Plunge saw



Portable router

Typical examples for hand operated electrical tools are circular hand saws and routers. Like stand alone machines they have a „table“ as a supporting surface for the workpiece; however, it is situated above the workpiece since the machine is placed on top of the workpiece.

There are two different designs for **circular hand saws**:

a) Swing cover saws b) Plunge saws

Most wide spread are **swing cover saws** that are usually available for bigger cutting depths. As the name indicates swing cover saws have a swing mounted protective cover that closes automatically after cutting. Plunge saws have a one part stationary protective cover. The complete motor and sawblade unit swivels back into the initial position after cutting so the sawblade disappears into the protective cover with these machines.

Plunge saws are used when it is necessary to make a plunge cut. On newer plunge saws, the splitting edge is spring loaded to allow for swivelling when making a plunge cut. There are various edge guide and guide rail systems available for circular hand saws, allowing for clean and most of all accurate saw cut. Only use under exceptional circumstances or when making a rough cut.

Usually, circular hand saw machines do not have scoring. A better cutting quality is obtained on the workpiece’s underside. And to achieve a workpiece upper side without tears (teeth exit side) it is recommended to score the top at a depth of approximately 1 mm first and to make the separating cut subsequently with a lateral set off of approximately 0.1 mm.

Hand router machines are versatile machines with almost unlimited uses. The following illustration gives an overview over the most important processing possibilities.

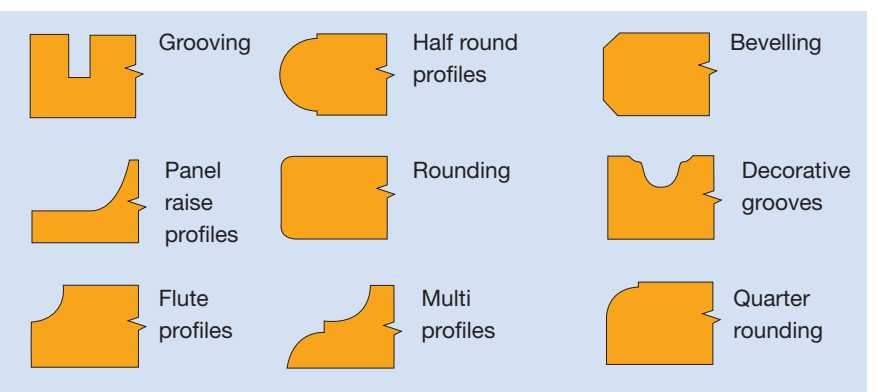

In most instances the tools for hand router machines have bearings or guide surfaces disks to guide the machine along the workpiece edge. Another method is working with templates. This means that a template is mounted in the machine table allowing an exact reproduction by following the contour. Sizing cuts or machining of grooves are best made by edge guides or guide rail systems. Round parts can be created by using a circular aid, similar to a compass.

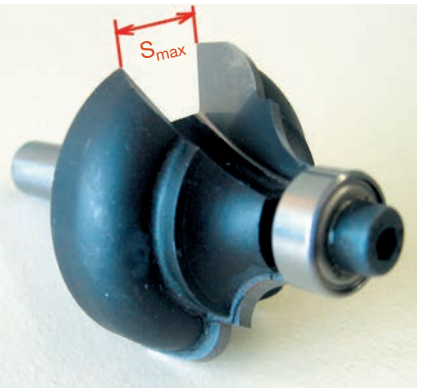

Cutting tool with guide ring for portable router.

Hand router machines are often used for flush milling veneer or laminates glued to sized boards with an overhang. Router tools with the knife cutting radius equalling the bearing diameter are used. Often no effective extraction is available due to the limited space on hand routers.
When grooving/profiling, chips may be extracted by an extraction pipe.

Notes

www.leitz.org

SDZ/MA 03/2021 Subject to changes prior to technical developments. © Leitz GmbH & Co. KG